Bell MODEL 407

MAINTENANCE PLANNING INFORMATION

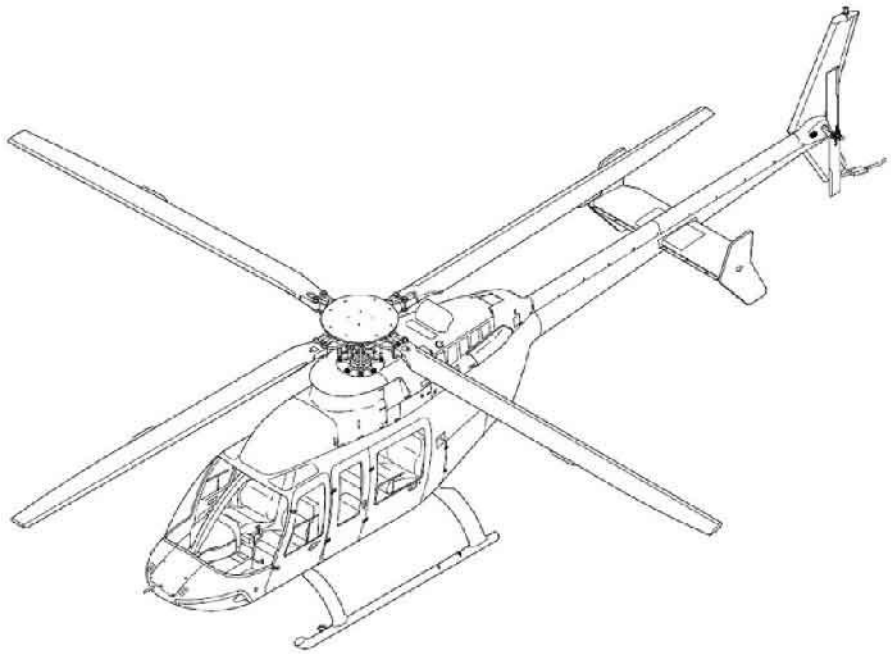

NOTICE

The instructions set forth in this manual, as supplemented or modified by Alert Service Bulletins (ASB) or other directions issued by Bell and Airworthiness Directives (AD) issued by the applicable regulatory agencies, shall be strictly followed.

Copyright © 2017 Bell and Bell Canada Ltd. All rights reserved

POST OFFICE BOX 482 • FORT WORTH, TEXAS 76101

Export Classification C, ECCN EAR99

Issue 011 - 17 JUN 2025

POST OFFICE BOX 482 • FORT WORTH, TEXAS 76101

PROPRIETARY RIGHTS NOTICE

These data are proprietary to Bell Disclosure, reproduction, or use of these data for any purposes other than helicopter operation and maintenance is forbidden without prior authorization from Bell

DESTINATION CONTROL STATEMENT

These commodities, technology, or software were exported from the United States in accordance with the Export Administration Regulations (EAR). Diversion contrary to U.S. law prohibited.

Additional copies of this publication may be obtained by contacting:
Commercial Publications Distribution Center Bell P.O. Box 482 Fort Worth, Texas 76101-0482

POST OFFICE BOX 482 • FORT WORTH, TEXAS 76101

Highlights

The listed changes are introduced in issue 011, dated 2025-06-17, of this publication.

C = Changed data module, N = New data module

N/C	Data module	Reason for update
Chapter 04 - Airworthiness Limitations Schedule:		
C	407-A-04-00-00-00B-023A-A / 00009, Airworthiness limitations schedule - Log of TC approved revisions	
C	407-A-04-00-00-00A-288A-A / 00010, Airworthiness Limitations Schedule - Airworthiness Limitations Schedule	Added airworthiness life for tailboom attachment bolt with 5000 hours or 6 years. Updated airworthiness life for main rotor mast as 6300 hours or 100,000 RIN.
Chapter 05 - Inspections and Component Overhaul Schedule:		
C	407-A-05-40-00-03A-281A-A / 00022, Scheduled Inspections - Progressive Inspection - Event 4	Corrected the Data Reference links for the electrical section.
C	407-A-05-40-00-04A-281A-A / 00023, Scheduled Inspections - Progressive Inspection - Event 5	Added step 1.11 in Zone 8 - Forward fuselage section.
C	407-A-05-40-00-10A-281A-A / 00029, Scheduled Inspections - 600 Hour or 12 Month Inspection	Added steps 2.1 and 2.2 for the AFCS functional check.
C	407-A-05-50-00-05A-284A-A / 00044, Conditional Inspections - Overtorque	Revised the step 5.5

POST OFFICE BOX 482 • FORT WORTH, TEXAS 76101

Intentionally blank page

POST OFFICE BOX 482 • FORT WORTH, TEXAS 76101

LIST OF CHAPTERS

Chapter	Data module code
Chapter 04 - Airworthiness Limitations Schedule	407-A-04-00-00-00A-009A-A / 00007
Chapter 05 - Inspections and Component Overhaul Schedule	407-A-05-00-00-00A-009A-A / 00011

POST OFFICE BOX 482 • FORT WORTH, TEXAS 76101

Intentionally blank page

POST OFFICE BOX 482 • FORT WORTH, TEXAS 76101

List of Effective Data Modules

The listed documents are included in issue 011, dated 2025-06-17, of this publication.

C = Changed data module, N = New data module

Document title	Data module code / Seq number	Issue date	Applicable to
Temporary revision record - Technical standard records	DMC-407-A-00-71-00-00A-008A-A / 00002	2017-05-18	ALL
Customer support and services - Function	DMC-BHT-A-00-00-00-00A-011A-A / 00003	2021-11-09	ALL
Customer feedback, helicopter sales notice and warranty - Administrative forms and data	DMC-BHT-A-00-00-00-00A-023A-A / 00004	2020-01-07	ALL

POST OFFICE BOX 482 • FORT WORTH, TEXAS 76101

Temporary revision record - Technical standard records

This temporary revision record provides a current listing of active temporary revisions against the manual. Temporary revisions which have been canceled/incorporated will only be maintained on the record until the next revision is issued. If there are no temporary revisions shown on the record, this is confirmation that there are no temporary revisions issued against the manual.

Temporary Revision No.	Title	Date issued	Date canceled

POST OFFICE BOX 482 • FORT WORTH, TEXAS 76101

Customer support and services - Function

1. Customer support and services

Flying smart means that no matter where you are, or what time it is, you can make a call and get additional information, clarification, or advice on a technical or operational issue concerning your helicopter or information contained in our Technical Publications. Product Support Engineering (PSE) is just a phone call away and may be contacted as follows:

Phone:	450-437-2862 or 800-363-8023 (US/Canada)
Fax:	450-433-0272
E-mail:	productsupport@bellflight.com

POST OFFICE BOX 482 • FORT WORTH, TEXAS 76101

Customer feedback, helicopter sales notice and warranty - Administrative forms and data

WARNING

THIS MANUAL APPLIES ONLY TO HELICOPTERS AND COMPONENTS MAINTAINED IN ACCORDANCE WITH BELL APPROVED PROCEDURES USING BELL APPROVED PARTS.

ALL INSPECTION, REPAIR AND OVERHAUL PROCEDURES PUBLISHED BY BELL, INCLUDING PART RETIREMENT LIFE, ARE BASED SOLELY ON THE USE OF BELL PARTS THAT HAVE BEEN MAINTAINED USING BELL APPROVED DATA. THE DATA PUBLISHED HEREIN OR OTHERWISE SUPPLIED BY BELL IS NOT APPLICABLE TO NON-BELL PARTS OR PARTS THAT HAVE BEEN REPAIRED USING DATA AND/OR PROCESSES NOT APPROVED BY BELL.

BELL IS NOT RESPONSIBLE FOR ANY PART OTHER THAN THOSE THAT IT HAS APPROVED.

BEFORE PERFORMING ANY PROCEDURE CONTAINED IN THIS MANUAL YOU MUST INSPECT THE AFFECTED PARTS AND RECORDS FOR EVIDENCE OF ANY MANUFACTURE, REPAIR, REWORK, OR USE OF A PROCESS NOT APPROVED BY BELL.

IF YOU IDENTIFY OR SUSPECT THE USE OF PARTS NOT AUTHORIZED BY BELL, EITHER REMOVE THE AFFECTED ITEM FROM THE AIRCRAFT OR OBTAIN INSTRUCTIONS FOR CONTINUED AIRWORTHINESS FROM THE MANUFACTURER OR THE ORGANIZATION THAT APPROVED THE REPAIR.

Refer to Figure 1, Figure 2, Figure 3, and Figure 4.

POST OFFICE BOX 482 • FORT WORTH, TEXAS 76101

CUSTOMER FEEDBACK

RETURN VIA FAX TO PRODUCT SUPPORT ENGINEERING (450) 433-0272

Manual Title: _____

Manual Number (if assigned): _____

Date of Issue: _____

Date of Last Revision: _____

Section, Chapter, Paragraph Affected: _____

Your Feedback: _____

_____

_____

_____

Now Reads: _____

_____

_____

_____

Should Read: _____

_____

_____

_____

_____

Your Name: _____

Address: _____

_____

Position: _____ **Telephone No.:** _____

Company: _____ **Fax No.:** _____

Reference No. (your initials and date): _____

(If you choose to mail this form, fold in thirds with address exposed, tape and mail.)

ICN-BHT-A-000000-A-97499-00002-F-002-01

Figure 1. Customer feedback (Sheet 1 of 2)

POST OFFICE BOX 482 • FORT WORTH, TEXAS 76101

TAPE HERE

From _____

_____

_____

POSTAGE NECESSARY

Product Support Engineering
12,800 rue de l'Avenir
Mirabel, Québec, Canada, J7J 1R4

FOLD ON DOTTED LINES AND TAPE

TAPE HERE

ICN-BHT-A-000000-A-97499-00003-F-002-01

Figure 1. Customer feedback (Sheet 2 of 2)

POST OFFICE BOX 482 • FORT WORTH, TEXAS 76101

IMPORTANT

HELICOPTER SALES NOTICE

Please complete this form and return by mail, e-mail (publications@bh.com), or fax (817-280-6466, Attention: CPDC). This will ensure that the new owners/operators receive updates to their ***Bell Helicopter Textron Technical Manuals*** and ***Bulletins.***

Model of Helicopter Sold or Purchased _____

Serial and Registration Number _____

Name of ***New Owner*** (company or individual) _____

Name of ***New Operator*** _____

Future Publications to be mailed to this address:

Address _____

City _____

State/Province _____

Zip/Postal Code _____

Country _____

Fax No. _____ Telephone No. _____

E-mail Address _____

Register for access to electronic publications at www.bellhelicopter.net

ICN-BHT-A-000000-A-97499-00004-F-001-01

Figure 2. Sales notice (Sheet 1 of 2)

POST OFFICE BOX 482 • FORT WORTH, TEXAS 76101

TAPE HERE

From _____

_____

_____

NO POSTAGE
NECESSARY
IF MAILED
IN THE
UNITED STATES

BUSINESS REPLY MAIL

FIRST CLASS PERMIT NO. 1744 FORT WORTH, TEXAS

COMMERCIAL PUBLICATION DISTRIBUTION CENTER
P.O. BOX 482
FORT WORTH, TEXAS 76101-0482

FOLD ON DOTTED LINES AND TAPE

TAPE HERE

ICN-BHT-A-000000-A-97499-00005-F-002-01

Figure 2. Sales notice (Sheet 2 of 2)

POST OFFICE BOX 482 • FORT WORTH, TEXAS 76101

SPARE PARTS WARRANTY

WARRANTY: Seller warrants each new helicopter part or helicopter part reconditioned by Seller to be free from defect in material and workmanship under normal use and service and if installed on Bell model helicopters for up to 1000 hours of operation, one (1) year from date of installation, or two (2) years from date of shipment by Seller, whichever occurs first. Seller assigns each manufacturer's warranty to Buyer to the extent such manufacturer's warranty exists and is assignable.

Parts, components and assemblies of all helicopter parts may have been restored or reworked due to mars, blemishes, dents or other irregularities during the manufacturing process. Such restoration and/or rework are permitted under Seller's approved manufacturing and engineering processes and guidelines. The restoration and/or rework so completed do not render such items defective in material or workmanship.

Seller's sole obligation under this warranty is limited to the repair or replacement of parts which are determined to Seller's reasonable satisfaction to have been defective within the applicable warranty period as described above. Replacement of parts may be either new or reconditioned at Seller's election and at the lowest allowable maintenance level contained in Seller's manuals, service bulletins or applicable supplier manuals. Seller shall also reimburse reasonable freight charges, excluding insurance, customs fees, duties, handling fees, and taxes. Seller shall not reimburse Buyer for any parts repaired or replaced outside of the Seller's Warranty Claims Process unless express prior written authorization is granted by Seller's Warranty Department to Buyer for such repair or replacement.

NO FAULT FOUND: In the event Seller determines, after evaluation of a returned part, that a defect does not exist, then Buyer shall pay all expenses incurred by Seller related to the return including, but not limited to, costs incurred in shipping and evaluating the part and cost for any replacement part and restocking of the part. In addition, Seller shall not reimburse Buyer for any costs related to the removal or reinstallation of such a part.

WARRANTY CLAIM PROCESS: Defective parts must be reported in writing to the Seller's Warranty Administration within fourteen (14) days of being found defective. Parts may be repaired or replaced with new or reconditioned parts, at Seller's election. Warranty adjustment is contingent upon the Buyer complying with the Seller's Warranty Process as described in the Bell Helicopter VISTA Customer Portal and with the Seller's Warranty Administration disposition instructions for defective parts. Failure to properly comply with Seller's Warranty Process may, at Seller's sole option, void Seller's warranty as to the allegedly defective part.

RETURN SHIPMENT: Parts returned to Seller will be eligible for remedy under this warranty only if the part is carefully packed by the Buyer for the return shipment. Damage occurring to a part due to improper packaging may result in the denial of a warranty claim. In the event that Seller determines a returned part to be damaged or unsalvageable due to improper packaging, the Buyer will be billed repair or replacement cost incurred by Seller. The party initiating shipment bears the risk of loss or damage to parts in transit.

ICN-BHT-A-000000-A-97499-00006-F-002-01

Figure 3. Warranty (Sheet 1 of 3)

POST OFFICE BOX 482 • FORT WORTH, TEXAS 76101

CORE RETURNS: Any core removed by Buyer for which Seller has furnished a replacement part through the Warranty Process shall be shipped by Buyer, with all historical service records, to a facility designated by Seller, within fourteen (14) days of receipt by Buyer of the replacement part. Buyer shall provide Seller with proof of shipment within fourteen (14) days following receipt of the replacement part. In the event that Buyer fails to provide Seller with such proof of shipment within the fourteen (14) days or fails to provide the applicable historical service records, Buyer shall be charged the invoiced value of the replacement part.

WARRANTY AND LIABILITY DISCLAIMERS AND EXCLUSIONS: THIS WARRANTY IS GIVEN AND ACCEPTED IN PLACE OF (i) ALL OTHER WARRANTIES OR CONDITIONS, EXPRESS OR IMPLIED, INCLUDING BUT NOT LIMITED TO THE IMPLIED WARRANTIES OR CONDITIONS OF MERCHANTABILITY OR FITNESS FOR A PARTICULAR PURPOSE AND (ii) ANY OBLIGATION, LIABILITY, RIGHT, CLAIM OR REMEDY IN CONTRACT OR IN TORT, INCLUDING PRODUCT LIABILITIES BASED UPON STRICT LIABILITY, NEGLIGENCE, OR IMPLIED WARRANTY IN LAW.

This warranty is the only warranty made by Seller. The Buyer's sole remedy for a breach of this warranty or any defect in a part is the repair or replacement of the helicopter part and reimbursement of reasonable freight charges. Seller excludes liability, whether as a result of a breach of contract or warranty, negligence or strict product liability, for incidental or consequential damages, including without limitation, damage to the helicopter or other property, costs and expenses resulting from required changes or modifications to helicopter components and assemblies, changes in retirement lives and overhaul periods, local customs fees and taxes, and costs or expenses for commercial losses or lost profits due to loss of use or grounding of helicopters or otherwise.

Seller makes no warranty and disclaims all liability in contract or in tort, including, without limitation, negligence and strict tort liability, with respect to work performed by third parties at Buyer's request and with respect to engines, engine accessories, batteries, radios, and avionics.

Seller makes no warranty and disclaims all liability with respect to components or parts damaged by, or worn due to, normal wear and tear, erosion or corrosion. Seller makes no warranty and disclaims all liability for consumables which are defined as items required for normal and routine maintenance or replaced at scheduled intervals shorter than the warranty period. "Consumables" include but are not limited to engine and hydraulic oil, oil filters, packings and o-rings, anti-corrosion and/or sealing compounds, brush plating material, nuts, bolts, washers, screws, fluids, compounds, and standard aircraft hardware that is readily available to aircraft operators from sources other than Seller.

This warranty shall not apply to any helicopter part which has been repaired or altered outside Seller's factory in any way so as, in Seller's sole judgment, to affect its stability, safety or reliability. This warranty shall not apply to any helicopter part which has been subject to misuse, negligence or accident, or which has been installed in any aircraft which has been destroyed. Repairs and alterations which use or incorporate parts and components other than genuine Bell parts or parts approved by Bell for direct acquisition from sources other than Bell itself are not warranted by Bell, and this warranty shall be void to the extent that such repairs and alterations,

ICN-BHT-A-000000-A-97499-00121-D-001-01

Figure 3. Warranty (Sheet 2 of 3)

POST OFFICE BOX 482 • FORT WORTH, TEXAS 76101

in Seller's sole judgment, affect the stability, safety or reliability of the helicopter or any part thereof, or damage genuine Bell or Bell-approved parts. No person, corporation or organization, including Bell Authorized Customer Service Facilities, is authorized by Seller to assume for it any other liability in connection with the sale of its helicopters and parts.

NO STATEMENT, WHETHER WRITTEN OR ORAL, MADE BY ANY PERSON, CORPORATION OR ORGANIZATION, INCLUDING BELL AUTHORIZED CUSTOMER SERVICE FACILITIES, MAY BE TAKEN AS A WARRANTY NOR WILL IT BIND SELLER.

CHOICE OF LAW AND JURISDICTION: This warranty shall be interpreted under and governed by the laws of the State of Texas. All legal actions based upon claims or disputes pertaining to or involving this warranty including, but not limited to, Seller's denial of any claim or portion thereof under this warranty, must be filed in the courts of general jurisdiction of Tarrant County, Texas or in the United States District Court for the Northern District of Texas, Ft. Worth Division located in Ft. Worth, Tarrant County, Texas. In the event that Buyer files such an action in either of the court systems identified above, and a final judgment in Seller's favor is rendered by such court, then Buyer shall indemnify Seller for all costs, expenses and attorneys' fees incurred by Seller in defense of such claims. In the event Buyer files such a legal action in a court other than those specified, and Seller successfully obtains dismissal of that action or transfer thereof to the above described court systems, then Buyer shall indemnify Seller for all costs, expenses and attorneys' fees incurred by Seller in obtaining such dismissal or transfer.

ICN-BHT-A-000000-A-97499-00122-D-001-01

Figure 3. Warranty (Sheet 3 of 3)

POST OFFICE BOX 482 • FORT WORTH, TEXAS 76101

HELP

HELP EVALUATE LOGISTICS PUBLICATIONS

Have you found something wrong with this manual — an error, an inconsistency, unclear instructions, etc.? Although we strive for accuracy and clarity, we may make errors on occasion. If we do and you discover it, we would appreciate your telling us about it so that we can change whatever is incorrect or unclear. Please be as specific as possible.

Your complaint or suggestion will be acknowledged and we will tell you what we intend to do.

You may use the enclosed Customer Feedback form, as applicable, to inform us where we have erred.

Your assistance is sincerely appreciated.

ICN-BHT-A-000000-A-97499-00007-F-001-01

Figure 4. HELP page (Sheet 1 of 1)

POST OFFICE BOX 482 • FORT WORTH, TEXAS 76101

Use of a S1000D publication - Introduction

1. Use of a S1000D publication - General information

1.1. Document structure

The breakdown of the helicopter into systems within the manuals is done under the S1000D specification (S1000D-I9005-01000-00, Issue No. 4.0,4, may 12, 2009).

This publication is written in Simplified English and obeys the instructions given in document (ASD-STE100, Issue 6, January 2013). The European Association of Aerospace Industries (ASD) prepared these documents.

All the data are included in data modules. A code identifies each data module.

1.1.1. Data Module Code (DMC)

The Data Module Code (DMC) structure is shown in Table 1.

Table 1. DMC structure

BHT	A	29-10-01	00A	520A	A
Paragraph 1.1.1.1	Paragraph 1.1.1.2	Paragraph 1.1.1.3	Paragraph 1.1.1.4	Paragraph 1.1.1.5	Paragraph 1.1.1.6

1.1.1.1. Model identification code

The model identification code is BHT.

1.1.1.2. System difference code

The system difference code is a letter (letters I and 0 are not used).

This letter identifies two or more sub-systems that can be installed as alternative items because they do the same function.

1.1.1.3. Standard Numbering System (SNS) code

The Standard Numbering System (SNS) code includes three pairs of digits that show:

- The system (e.g., 29, hydraulic power)
- The subsystem and the sub-subsystem (e.g., 10, main hydraulic)

NOTE

When the sub-subsystem code is zero, the two digits show all of the subsystem.

- The component (e.g., 01, hydraulic reservoir filter module)

1.1.1.4. Disassembly code and disassembly code variant

1.1.1.4.1. Disassembly code

The disassembly code is a two-digit code.

The disassembly code shows the breakdown of a component, as follows:

- 00 - Data module for all of the helicopter, system, subsystem, or component.
- 01 - Data module for the first assembly that you remove from the component.
- 02 - Data module for the second assembly that you remove from the component.

Code 03 and the subsequent codes refer to the third, fourth, etc assembly that you remove from the component.

The disassembly code also identifies the data modules in sequence.

1.1.1.4.2. Disassembly code variant

The disassembly code variant is a letter (letters I and 0 are not used) that identifies alternative items.

These items are different, but the difference is too small to cause a change in the system difference code.

1.1.1.5. Information code and information code variant

1.1.1.5.1. Information code

The information code is a three-digit code.

The information code identifies the types of information you can find in the data module.

1.1.1.5.2. Information code variant

The information code variant is a letter (letters I and 0 are not used).

The information code variant is used for different data modules that are applicable to the same component and type of operation.

1.1.1.6. Item location code

You can find these item location codes:

- A on the helicopter.
- B on the removed assembly/component.
- D applicable to all the locations.
- Z is used as a generic item location code.

1.1.2. List of Effective Data Modules (LOEDM)

Each chapter includes a List of Effective Data Modules (LOEDM) . The list shows the data module codes of all the data modules in the chapter.

The LOEDM gives the information that follows for each data module:

- Technical name and information name columns. These two columns together give the title of the data module.
- Document identifier column. This column gives the data module code.
- The status of the data module. This column gives the information about the status of the data module (N for new and C for changed).
- Issue date. This column gives the date of the data module changes.
- Applicability column. This column gives information about the applicability of the data module to different versions, configurations, and modifications of the helicopter.

POST OFFICE BOX 482 • FORT WORTH, TEXAS 76101

Maintenance planning information - Lists of terms

1. Glossary of terms

Airworthiness Limitations	A section of the Instructions for Continued Airworthiness (ICA) that contains each mandatory replacement time, inspection interval, and related inspection task (407-A-04-00-00-00A-009A-A / 00007). The information contained in the Airworthiness Limitations section may be changed to reflect service and/or test experience or new analysis methods.
Calendar Time	*The elapsed time starts on the day the inspection is completed, the component is installed, or the rotor is turned for the first time and ends on the last day of the month that the time limit expires. Calendar time is continuous. Calendar time does not stop when a component is removed, put the helicopter in storage, etc..*
Condition	The state of an item compared to a known standard.
Damage	A physical deterioration of a component.
Delamination	Structural separation or cracking that occurs at or in the bond plane of a structural element, within a structural assembly, caused by in service accidental damage, environmental effects, and/or cyclic loading.
Disbond	See Delamination.
Discard	The removal from service of an item at a specified life limit or item that has damage that cannot be repaired.
Electrical Wire Interconnection System (EWIS)	An electrical connection between two or more points including the associated termination devices (e.g., connectors, terminal blocks, splices) and the necessary means for its installation and identification. It does not include system components (line replaceable units), relays, lights, etc.
Examine, Visually	Look carefully to determine the condition of a part/component. Find how that condition relates to a specific standard.
Failure	The inability of an item to perform within previously specified limits.
Fault	An identifiable condition in which one element of a redundant system has failed (no longer available) without impact on the required function output of the system. At the system level, a fault is not considered a functional failure.
Flight Time	See Time-in-Service (Flight Time).
Function	The normal characteristic actions of an item.
Functional Check	A quantitative check to determine if one or more functions of an item performs within specified limits.
Functional Failure	Failure of an item to perform its intended function within specified limits.
Inspection	A non-destructive examination of a part, component, or system to verify its conformity to a specific standard.
Inspection, Detailed	An intensive examination of a specific item, installation, or assembly to detect damage, failure, or irregularity. Available lighting is normally supplemented with a direct source of good lighting at an intensity deemed appropriate. Inspection aids such as mirrors, magnifying lenses, etc. may be necessary. Surface cleaning and elaborate access procedures may be required.
Inspection, General Visual	A visual examination of an interior or exterior area, installation, or assembly to detect obvious damage, failure, or irregularity. This level of inspection is made from within touching distance, unless otherwise specified. A mirror may be necessary to enhance visual access to all exposed surfaces in the inspection area. This level of inspection is made under normal available lighting conditions such as daylight, hangar lighting, flashlight, or drop-light and may require removal or opening of access panels or doors. Stands, ladders, or platforms may be required to gain proximity to the area being checked.
Inspection, Special Detailed	An intensive examination of a specific item, installation, or assembly to detect damage, failure, or irregularity. The examination is likely to make extensive use of specialized inspection techniques and/or equipment. Intricate cleaning and substantial access or disassembly procedures may be required.

POST OFFICE BOX 482 • FORT WORTH, TEXAS 76101

Inspection, Zonal	A collective term comprising selected general visual inspections and visual checks that is applied to each zone, defined by access and area, to check system and power plant installations and structure for security and general condition.
Inspection, Non-scheduled	An inspection that is not part of a schedule.
Inspection, Opportunity	An inspection that is performed in conjunction with another scheduled inspection or maintenance task, while in the same area or zone.
Interval, Initial	Interval between the start of service-life and the first task accomplishment.
Interval, Repeat	The interval (after the initial interval) between successive accomplishments of a specific maintenance task.
Item	Any level of hardware assembly (e.g., system, subsystem, module, accessory, component, unit, part, etc.).
Lubrication	See Servicing.
Maintenance	The servicing and/or the repair of a helicopter, a system, or a component to maintain its serviceability.
Maintenance, Preventive	To do small maintenance action(s) on a regular basis to prevent non-scheduled maintenance.
Maintenance Significant Item (MSI)	Items identified by the manufacturer whose failure: 1. could affect safety (on ground or in flight), and/or 2. is undetectable during operations, and/or 3. could have significant operational impact, and/or 4. could have significant economic impact.
Operating Time	Actual flight time or calendar time that must be recorded in the Historical Service Records (HSR) or in the helicopter logs. The operating time is specified as Time-in-Service (Flight Time) and/or Calendar Time.
Operational Check	A task to determine that an item is fulfilling its intended purpose. It does not require quantitative tolerances. This is a failure finding task.
Program, Lead-The-Fleet (LTF)	A program used to validate the performance of an approved product improvement or a change to a maintenance interval. The engineering aspects of this change are approved. The program is closely monitored by Bell Helicopter Textron (BHT) in an operational environment with selected operators.
Program, Special	An approved program that may be initiated under certain special conditions to meet specific requirements. The program is clearly defined through a plan and the engineering and maintenance aspects are approved by the regulatory authorities.
Protective Device	Any device or system that has a function to avoid, eliminate, or reduce the consequences of an event or the failure of some other function.
Residual Fuel	The amount of unusable fuel that can be drained.
Retirement Index Number (RIN)	This is for components sensitive to operational events, such as normal landings, run-on landings, and autorotation landings. This number is based on the fatigue damage that results from these events.
Safety	Safety shall be considered as adversely affected if the consequences of the failure condition would prevent continued safe flight and landing of the helicopter and/or might cause serious or fatal injury to human occupants.
Scale Reading	The value recorded directly by a scale before subtracting the tare weight.
Security	The presence of attaching parts that are properly tightened or appear to be, and the presence of properly installed (as required) locking devices such as lockwire, cotter pins, or other.
Servicing	Any act of lubricating or servicing for the purpose of maintaining inherent design capabilities.
Standard	A specified rule, reference, or measure that you use to determine the condition of a component.

POST OFFICE BOX 482 • FORT WORTH, TEXAS 76101

Time-in-Service (Flight Time) The measured time that starts the moment the helicopter leaves the ground and continues until it touches the ground at the next point of landing. The time when the helicopter is on the ground, with the engine and the rotor turning, is not included.

Torque Event A significant change in power setting. The types of power setting changes are as follows:

- A Ground-Air-Ground (GAG) event (i.e., one takeoff plus the subsequent landing)
- A load lift, such as a cargo hook lift operation, a water bucket lift operation, or an airborne replenishment of fixed internal or external reservoirs

POST OFFICE BOX 482 • FORT WORTH, TEXAS 76101

Intentionally blank page

POST OFFICE BOX 482 • FORT WORTH, TEXAS 76101

CHAPTER 04
AIRWORTHINESS LIMITATIONS SCHEDULE

MAINTENANCE PLANNING INFORMATION

POST OFFICE BOX 482 • FORT WORTH, TEXAS 76101

Intentionally blank page

POST OFFICE BOX 482 • FORT WORTH, TEXAS 76101

List of Effective Data Modules

The listed documents are included in issue 011, dated 2025-06-17, of this publication.

C = Changed data module, N = New data module

Document title	Data module code / Seq number		Issue date	Applicable to
Airworthiness limitations schedule - Approval	DMC-407-A-04-00-00-00A-023A-A / 00008		2020-01-07	ALL
Airworthiness limitations schedule - Log of TC approved revisions	DMC-407-A-04-00-00-00B-023A-A / 00009	C	2025-06-17	ALL
Airworthiness Limitations Schedule - Airworthiness Limitations Schedule	DMC-407-A-04-00-00-00A-288A-A / 00010	C	2025-06-17	ALL

POST OFFICE BOX 482 • FORT WORTH, TEXAS 76101

Intentionally blank page

POST OFFICE BOX 482 • FORT WORTH, TEXAS 76101

Airworthiness limitations schedule - Approval

The Airworthiness Limitations Schedule is approved by the Minister and specifies the maintenance required by any applicable airworthiness or operational rules unless an alternative program has been approved by the Minister.

R. Knoerr

Chief Engineering
Aircraft Certification
Transport Canada
29 July 2010

POST OFFICE BOX 482 • FORT WORTH, TEXAS 76101

Intentionally blank page

POST OFFICE BOX 482 • FORT WORTH, TEXAS 76101

Airworthiness limitations schedule - Log of TC approved revisions

ISSUE NUMBER	DATE OF SIGNATURE	TC SIGNATURE
ISSUE 001	2 May 2019	2 May 2019
ISSUE 002	2 October 2020	2 October 2020
ISSUE 003	21 JUNE 2021	DocuSigned by: Michel Lopez C9358B25C4794F6... 6/21/2021
ISSUE 004	17 JUNE 2025	Ayre, Keith Digitally signed by Ayre, Keith Date: 2025.06.17 08:12:21 -04'00'

POST OFFICE BOX 482 • FORT WORTH, TEXAS 76101

Intentionally blank page

POST OFFICE BOX 482 • FORT WORTH, TEXAS 76101

Airworthiness Limitations Schedule - Airworthiness Limitations Schedule

WARNING

ALL REPAIR AND OVERHAUL PROCEDURES LIVES PUBLISHED BY BELL, INCLUDING COMPONENT RETIREMENT LIFE, ARE BASED SOLELY ON THE USE OF BELL APPROVED PARTS AND PROCESSES. IF PARTS OR PROCESSES DEVELOPED OR APPROVED BY PARTIES OTHER THAN BELL HELICOPTER ARE USED, THEN THE DATA PUBLISHED OR OTHERWISE SUPPLIED BY BELL HELICOPTER ARE NOT APPLICABLE. THE USER IS WARNED TO NOT RELY ON BELL HELICOPTER DATA FOR PARTS AND PROCESSES NOT APPROVED BY BELL HELICOPTER. ALL APPLICABLE INSPECTIONS AND REPAIR METHODS MUST BE OBTAINED FROM THE SUPPLIER OF THE PARTS OR PROCESSES NOT APPROVED BY BELL HELICOPTER. BELL HELICOPTER IS NOT RESPONSIBLE FOR PARTS OR PROCESSES OTHER THAN THOSE WHICH IT HAS ITSELF DEVELOPED OR APPROVED.

WARNING

CONTINUED USE OF ANY TIME/ CALENDAR/RIN LIFE LIMITED COMPONENT PAST ITS STATED LIMITS IS NOT PERMITTED AS IT COULD SERIOUSLY AFFECT THE AIRWORTHINESS OF THE HELICOPTER.

THE COMPONENT MUST BE REMOVED FROM THE HELICOPTER NOT LATER THAN THE END OF THE LIFE LIMIT. IT MUST EITHER BE MADE UNSERVICEABLE OR MARKED IN A CONSPICUOUS MANNER TO PREVENT CONTINUED USE, EVEN INADVERTENT USE.

THE TIME/CALENDAR/RIN LIFE MUST NOT BE EXCEEDED WITHOUT THE EXPRESS WRITTEN AGREEMENT OF BELL HELICOPTER AND THE LOCAL CERTIFICATION AUTHORITIES.

WHEN A REPLACEMENT PART IS INSTALLED, THE PART NAME, PART NUMBER, SERIAL NUMBER, AND CURRENT OPERATING HOURS, IF APPLICABLE, MUST BE RECORDED IN THE HISTORICAL SERVICE RECORD FOR THE ASSEMBLY OR HELICOPTER.

NOTE

The requirements stated in Chapter 5 are to be complied with and the appropriate maintenance actions are to be performed.

NOTE

The airworthiness life or inspection interval for any part number contained in this schedule applies to all the successive dash numbers for that component unless it is otherwise specified.

The mandatory airworthiness limitations schedule (Table 1) summarizes the mandatory maximum life, in hours, years or by Retirement Index Number (RIN) of components with a limited airworthiness life. Parts that are not on the schedule have an unlimited airworthiness life. The inspection limitations schedule (Table 2) summarizes the mandatory inspection interval in hours.

Refer to the engine manufacturer's publications for the airworthiness limitations schedule of the engine and components.

WARNING

SOME PARTS ARE INSTALLED AS ORIGINAL EQUIPMENT ON BOTH MILITARY AND COMMERCIAL HELICOPTERS AND MAY HAVE A LOWER AIRWORTHINESS LIFE AND/OR OVERHAUL SCHEDULE WHEN USED ON A MILITARY HELICOPTER. IN ADDITION, CIRCUMSTANCES SURROUNDING THEIR USE MAY CALL FOR OPERATION OF THE MILITARY HELICOPTER OUTSIDE OF THE APPROVED COMMERCIAL FLIGHT ENVELOPE. CONSEQUENTLY, PARTS THAT HAVE BEEN USED ON MILITARY HELICOPTERS SHOULD NOT BE USED ON COMMERCIAL HELICOPTERS.

CAUTION

AIRWORTHINESS LIFE OF SOME KIT COMPONENTS MAY NOT BE COVERED IN THIS SCHEDULE. REFER TO APPLICABLE INSTALLATION INSTRUCTION (II) OR MAINTENANCE MANUAL SUPPLEMENT (MMS) FOR KIT COMPONENTS' SCHEDULE.

POST OFFICE BOX 482 • FORT WORTH, TEXAS 76101

NOTE

The airworthiness life given or the failure to give an airworthiness life to a component does not constitute a warranty of any kind. The only warranty applicable to the helicopter or any component is the warranty included in the Purchase Agreement for the helicopter or the component.

The airworthiness lives given to the components and assemblies are determined by experience, tests and the judgment of Bell Helicopter engineers. The airworthiness lives and inspection intervals cannot be changed without the approval of the Minister of Transport Canada.

Prior to disposing of unsalvageable helicopter parts and materials, caution should be exercised to ensure that the parts and materials are disposed of in a manner that does not allow them to be returned for service. Refer to FAA Advisory Circular 21-38 for guidance on the disposal of unsalvageable helicopter parts and materials.

Table 1. Airworthiness Limitations Schedule

NOMENCLATURE	PART NUMBER (1)	AIRWORTHINESS LIFE (2)
	MAIN ROTOR HUB AND BLADES	
Grip	406-010-108-119	1250 hours
Grip	406-010-108-125	5000 hours
Upper Plate	406-010-115-119	2500 hours
Lower Plate	406-010-117-115	2500 hours
Driving Ring Set	406-010-126-107	(3) 100,000 RIN
Expandable Blade Bolt	406-310-103-101	5000 hours
Lower Cone Seat	407-010-107-101	1250 hours
Lower Cone Seat	407-010-107-103	Unlimited
	MAIN ROTOR CONTROLS	
Clevis	406-010-416-101	5000 hours
Clevis	406-010-416-103	Unlimited
Bearing Universal	406-310-405-101	5000 hours
Bearing Universal	406-310-405-103	Unlimited
Rod End Assembly	406-310-404-101	5000 hours
Rod End Assembly	406-310-404-105	Unlimited
Anti-drive Link	406-010-432-101	5000 hours
Anti-drive Lever	406-010-431-109	5000 hours
Cyclic Longitudinal Bellcrank	407-001-526-101	5000 hours
Collective Bellcrank	407-001-524-101	5000 hours
Cyclic Lateral Bellcrank	407-001-527-101	5000 hours
Cyclic Lateral Bellcrank	407-001-528-101	5000 hours
Bellcrank Support	407-001-511-101	5000 hours
	TAIL ROTOR	
Blade	407-016-001-101	900 hours
Yoke	406-012-102-109	5000 hours
	DRIVE SYSTEM	
Main Rotor Mast	407-040-038-101	(3) *6300 hours or 100,000 RIN*
Input Driveshaft	206-340-300-103	(7)
Input Driveshaft	206-340-300-105	(9)
Input Driveshaft	206-340-300-107	(8) 5000 hours
Input Driveshaft	407-340-310-101	(13)
	PYLON SUPPORT	
L/H Pylon Side Beam	407-010-201-101	(3) (6) 1000 hours or 5500 RIN

POST OFFICE BOX 482 • FORT WORTH, TEXAS 76101

Table 1. Airworthiness Limitations Schedule (continued)

NOMENCLATURE	PART NUMBER (1)	AIRWORTHINESS LIFE (2)
L/H Pylon Side Beam	407-010-201-105	(3) 5000 hours or 17,000 RIN
R/H Pylon Side Beam	407-010-203-101	(3) (6) 1000 hours or 5500 RIN
R/H Pylon Side Beam	407-010-203-105	(3) 5000 hours or 17,000 RIN
Corner Mount	406-010-217-107	(3) 5000 RIN
Pylon Restraint Spring	407-010-206-103	5000 hours
	TAILBOOM	
Tailboom Assembly	407-030-801-107	(10) 5000 hours
Tailboom Assembly	407-030-801-201	(14) Unlimited
Tailboom Assembly	407-530-013-105	(14) Unlimited
Tailboom Assembly	407-530-014-101	(10) 5000 hours
Lower Tailboom Attachment Bolts (2)	*NAS626-26*	*5000 hours or 6 years*
Upper Tailboom Attachment Bolts (2)	*NAS627-30*	*5000 hours or 6 years*
	LANDING GEAR	
Standard Landing Gear Forward Crosstube	407-050-101-101	(4) 5000 RIN
Standard Landing Gear Forward Crosstube	407-722-101	(4) (12) 5000 RIN
Standard Landing Gear Aft Crosstube	407-050-102-101	(4) 5000 RIN
Standard Landing Gear Aft Crosstube	407-723-104	(4) (12) 5000 RIN
Forward Crosstube Assembly (High Gear/Lightweight Float)	407-050-201-101	(4) 5000 RIN
Forward Crosstube Assembly (High Gear/Lightweight Float)	407-724-101	(4) (12) 5000 RIN
Aft Crosstube Assembly (High Gear/Lightweight Float)	407-050-202-101	(4) 5000 RIN
Aft Crosstube Assembly (High Gear/Lightweight Float)	407-725-104	(4) (12) 5000 RIN
Aft Crosstube Assembly (High Gear/Lightweight Float)	407-704-007-119	(5) 2500 Landings or (4) 5000 RIN
	KITS	
Reservoir	1271762	(11) 15 Years

POST OFFICE BOX 482 • FORT WORTH, TEXAS 76101

Table 1. Airworthiness Limitations Schedule (continued)

NOMENCLATURE	PART NUMBER (1)	AIRWORTHINESS LIFE (2)

NOTES:

1 Airworthiness limitation for part number listed applies to all successive dash numbers for that component unless otherwise specified.

2 Retirement Index Number (RIN) . Components sensitive to operational events, such as torque events or run-on landings, are assigned a maximum RIN number. This number is based on the fatigue damage that results from normal helicopter lifts and takeoffs (torque events) or from run-on landings, whichever applies. New components will begin with an accumulated RIN of zero, which will increase as the helicopter is subjected to torque events or run-on landings. The operator must record the number of torque events or run-on landings, and increase the accumulated RIN as directed. When a component reaches the maximum RIN or retirement flight hours, whichever occurs first, the component must be retired from service.

3 For every one torque event, you add one RIN to the previous total. A torque event occurs for every takeoff (one takeoff plus the subsequent landing equals one RIN) and every load lift. A load lift (internal or external) may be defined as a sling load, a rescue hoist load or any load that is added to the helicopter while airborne. For example: if an operator performs one takeoff, picks up and drops 10 sling loads, and then lands, he must record 11 torque events.

4 For every one run-on landing, you add one RIN to the previous total. A run-on landing is defined as one where there is forward ground travel of the helicopter greater than 3 feet with the weight on the skids. Refer to ASB 407-03-59.

5 This crosstube is modified from crosstube assembly 407-050-202-101 per ASB 407-02-50. Depending on status of part determined per Table 1 of ASB 407-02-50, crosstube may be subject to retirement upon reaching 2500 landings.

6 When the helicopter is used for pilot training operations that include repeated autorotation landings, record 0.4 flight hour for each practice autorotation landing (including hover throttle chops). Autorotation approaches with power recovery to hover do not have to be counted as autorotation landings.

7 Input driveshaft 206-340-300-103 must be removed from service no later than 30 September 1998. Refer to ASB 407-98-19 and Transport Canada AD CF-98-25 Bell.

8 Input driveshaft 206-340-300-107 must be overhauled every 1250 hours of operation. The overhaul is to be done by Kamatics Corp. only.

9 Input driveshaft 206-340-300-105 must be removed from service upon reaching 1250 hours in service. Refer to ASB 407-01-45 for details.

10 Tailboom assembly is also subjected to an airworthiness inspection. Refer to Table 2, ASB 407-07-80 and ASB 407-21-123 for details.

11 Reservoir per DOT-3HT and DOT exemption letter DOT-E-8162. This reservoir is part of reservoir 407-073-848-101.

12 Aeronautical Accessories Incorporated (AAI) crosstube assemblies listed are BHT-approved production and spare alternates.

13 Input driveshaft 407-340-310-101 must be overhauled every 2500 hours of operation. The overhaul is to be done by Kamatics Corp. only.

14 Tailboom assembly subjected to an airworthiness inspection. Refer to Table 2, ASB 407-08-84 and ASB 407-21-123 for details.

Table 2. Inspection Limitations Schedule

NOMENCLATURE	PART NUMBER (1)	INSPECTION INTERVAL (HOURS OPERATION TIME) (2)
Disc Pack Coupling	406-040-340-101	(3) 25 hours
Tail Rotor Hanger Bearing	406-040-339-101	(6) 25 hours
Tail Rotor Hanger Bearing	407-340-339-101	(13)
Swashplate Bearing	406-310-402-101	(5) 50/150 hours
Tail Rotor Blade	407-016-001-101	(7) 300 hours
Yoke Assembly	407-010-101-101	(4) 100 hours
Tailboom Assembly	407-030-801-201	(8) (9) (10) (12) 300 hours
Tailboom Assembly	407-030-801-107	(11) (12) Daily and 100 hours

POST OFFICE BOX 482 • FORT WORTH, TEXAS 76101

Table 2. Inspection Limitations Schedule (continued)

NOMENCLATURE	PART NUMBER (1)	INSPECTION INTERVAL (HOURS OPERATION TIME) (2)
Tailboom Assembly	407-530-013-105	(8) (9) (10) (12) 300 hours
Tailboom Assembly	407-530-014-101	(11) (12) Daily and 100 hours
Horizontal Stabilizer	407-023-801-109	(14)
AFCS Trim Actuator	418-00862-701	(15) 600 hours or 1 year

NOTES:

1 Inspection interval for part number listed applies to all successive dash numbers for that component unless otherwise specified.

2 Refer to Chapter 5 for inspection requirements.

3 Inspect disc pack coupling every 25 hours of operation. Refer to ASB 407-97-13, Transport Canada AD CF-97-20R1 and FAA AD 97-24-17. Refer to Figure 1 for inspection details.

4 Refer to Figure 2 for inspection details.

5 Swashplate bearing must be removed from service no later than 31 December 1998 and replaced by bearing 406-310-402-103. Refer to ASB 407-97-11 and Transport Canada AD CF-97-22 Bell. Note 1 above is not applicable to bearing 406-310-402-103.

6 Refer to Figure 3 for inspection details.

7 Refer to Figure 4 for inspection details.

8 You must do an inspection of tailboom assembly every 300 hours of operation. Refer to Figure 5 for inspection details. Additional inspection requirements are applicable for tailbooms that have accumulated 6900 hours in service and 8600 hours in service.

9 For tailbooms that have accumulated 6900 hours or more in service, or with total time unknown, inspect Area H and I (Figure 5) at every 150 hour interval using a 10X magnifying glass inspection method, or at every 500 hour interval using an Eddy current inspection method.

10 For tailbooms that have accumulated 8600 hours or more in service, or with total time unknown, do a general visual inspection of Area C and D (Figure 5) daily or every 50 hours using a 10X magnifying glass inspection method. Do not exceed a distance of 12 inches (30.48 cm) from the tailboom when conducting the daily general visual inspection

11 Tailboom assembly must be inspected daily and every 100 hours of operation. Refer to Figure 6 and Figure 7 for inspection details.

12 Contact Product Support Engineering for changes or modifications to the structure in area where a mandatory airworthiness inspection is specified.

13 The oil cooler blower and tail rotor segmented driveshaft bearings 407-340-339-101/-103 must be removed from service no later than 31 May 2004 and replaced by bearing 407-340-339-107. Refer to ASB 407-04-63 Rev. A, dated 3 March 2004 (or subsequent) and Transport Canada AD CF-2002-18R3.

14 Affected serial numbers of horizontal stabilizer 407-023-801-109 listed below must be removed from service no later than 30 September 2008.

BP725	BP758	BP775	BP785	BP796	BP805
BP750	BP760	BP776	BP787	BP797	BP829
BP751	BP765	BP778	BP788	BP800	
BP752	BP769	BP779	BP789	BP801	
BP753	BP770	BP780	BP790	BP802	
BP756	BP771	BP781	BP795	BP803	

15 Do a functional check of the AFCS Trim Actuator Relay (BHT-407-MM, Chapter 22).

POST OFFICE BOX 482 • FORT WORTH, TEXAS 76101

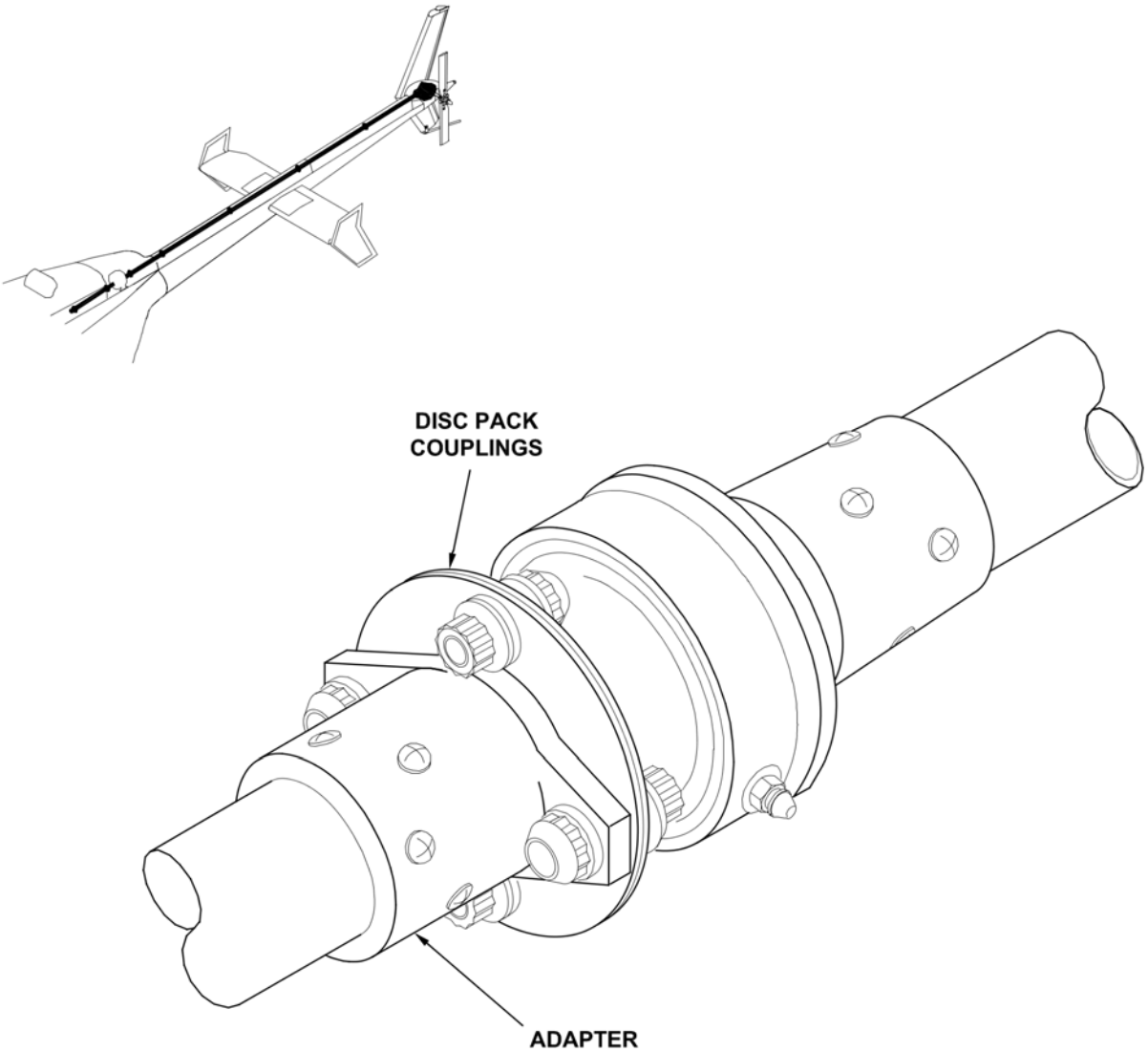

NOTES

1. Perform a visual inspection of the disc pack coupling. Disassembly of the disc pack coupling is not necessary.
2. Perform a detailed visual inspection of the disc pack coupling for any scratches, cracks, fretting, and corrosion.
3. Make sure that the laminate gapping is in limits. Refer to Chapter 65 for limits.

ICN-407-A-040000-B-97499-00001-A-001-01

Figure 1. Disc Pack Coupling - Inspection (Sheet 1 of 1)

POST OFFICE BOX 482 • FORT WORTH, TEXAS 76101

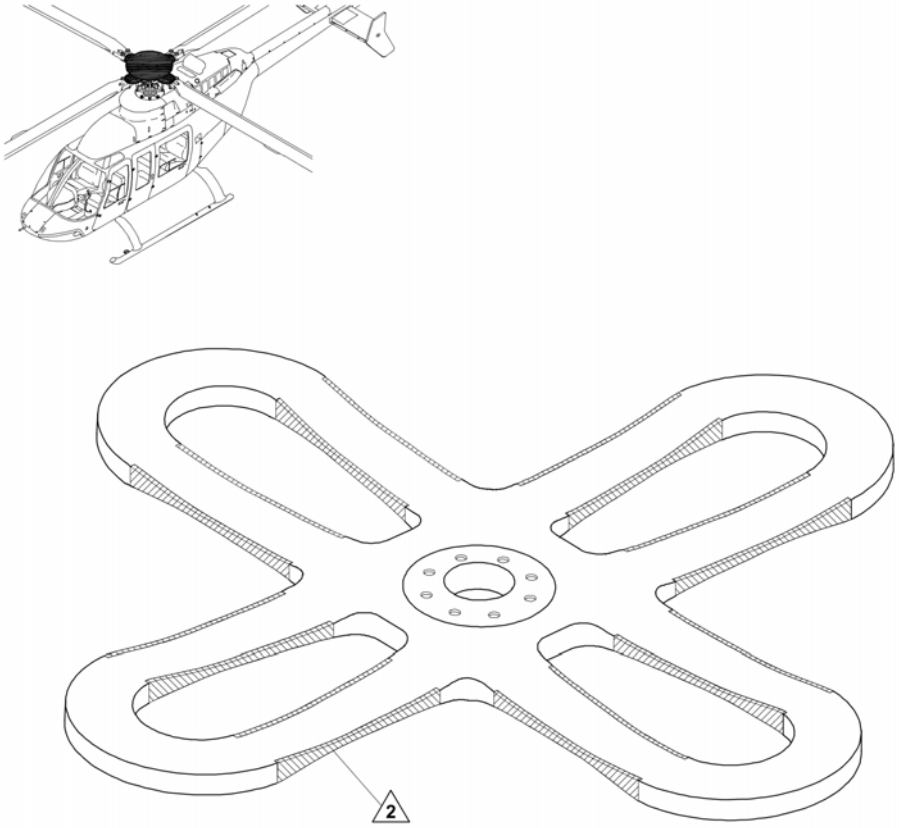

NOTES

1. **Perform a visual inspection of main rotor yoke flexures (all locations). Inspection can be done on helicopters with main rotor yoke installed.**

2. **Perform a detailed visual inspection (shaded areas) for evidence of cracking or delamination on the inside and outside edges of flexures.**

3. **Refer to BHT-407-CR&O (Chapter 62) for damage criteria.**

ICN-407-A-040000-B-97499-00002-A-001-01

Figure 2. Main Rotor Yoke - Inspection (Sheet 1 of 1)

POST OFFICE BOX 482 • FORT WORTH, TEXAS 76101

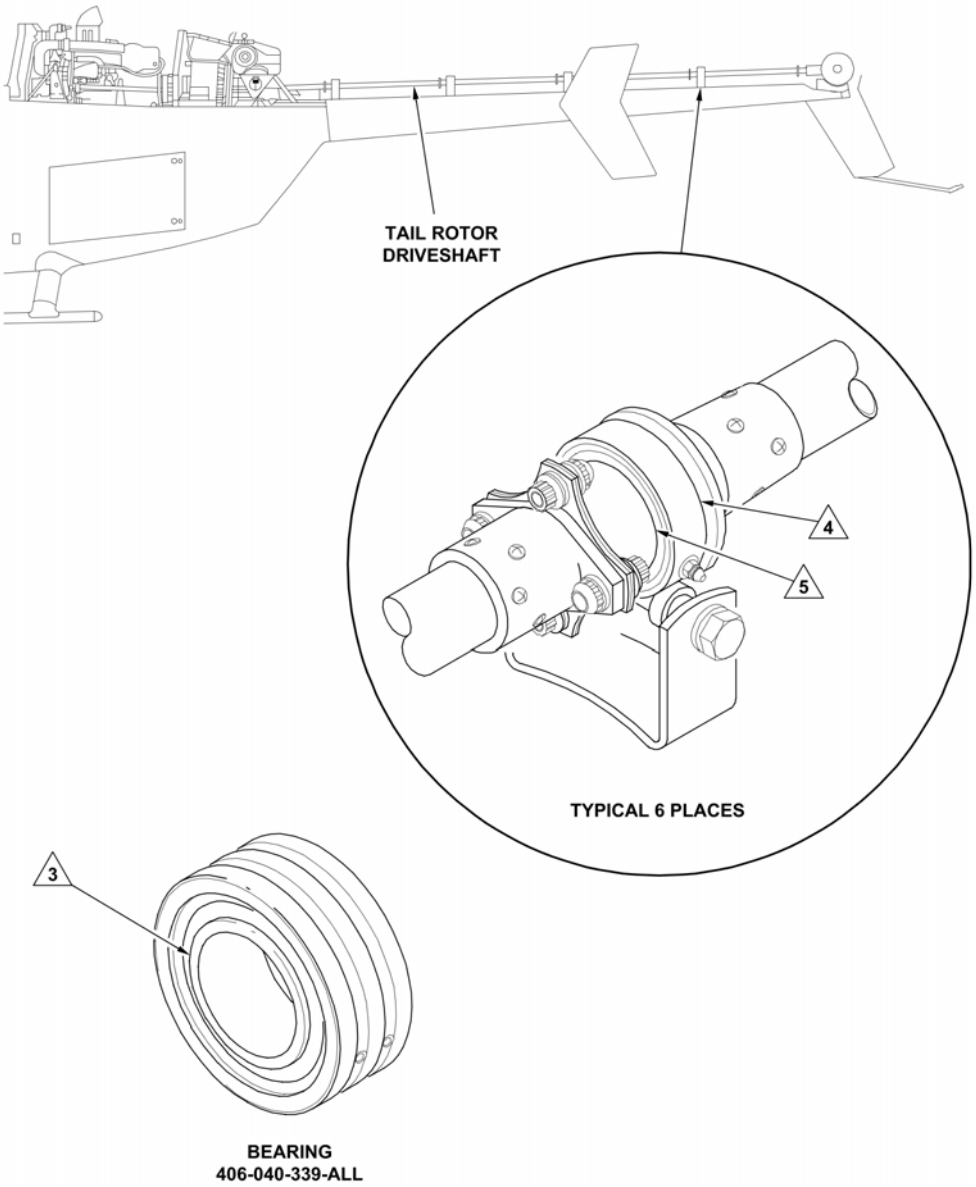

ICN-407-A-040000-B-97499-00003-A-001-01

Figure 3. Tail Rotor Hanger Bearing - Inspection (Sheet 1 of 2)

POST OFFICE BOX 482 • FORT WORTH, TEXAS 76101

NOTES

1. It is not necessary to disconnect the forward or aft short shaft or any of the tail rotor driveshaft segment assemblies in order to perform this inspection.

2. Remove the cowlings and covers to get access to the oil cooler blower assembly and the tail rotor driveshaft segment assemblies; see Chapter 53.

WARNING

OPERATING BEARINGS ARE HOT. IF THIS TEST IS DONE A SHORT TIME AFTER SHUTDOWN, EXERCISE CAUTION TO AVOID BURNS.

3. Inspect the bearing seal for tears. Bearings 406-040-339-ALL have a brown elastomer seal.

4. Slowly rotate the main rotor to turn the tail rotor driveshaft system. Check for indications of bearing roughness at each bearing location, six places, by placing a hand on the bearing hanger as the tail rotor driveshaft is turning.

5. Examine the accumulated grease that has been expelled from around the bearing seal during operation for a color change.

   Bearings 406-040-339-ALL use Mobil 28 grease that is normally red-purple but turns black when the bearing is damaged.

   Also, visually inspect the expelled grease that has accumulated for metal particles.

6. If there is no indication of roughness, the expelled grease is not black, there are no metal particles suspended in the expelled grease, and the bearing seal is intact, return the helicopter to service.

7. If the bearing seal is torn, the expelled grease is black, or there are metal particles suspended in the expelled grease, then replace the bearing; see Chapter 65.

8. If the bearing turns rough, remove the affected shaft and rotate the bearing manually to confirm the rough operation. Replace a rough turning bearing.

9. Notify Product Support Engineering that a damaged bearing has been found.

CAUTION

BEARING 406-040-339-ALL, BROWN ELASTOMER SEAL MUST BE GREASED WITH MOBIL 28 ONLY. DO NOT MIX WITH ANY OTHER GREASE. USE A SEPARATE GREASE GUN. IF THE BEARING IS CONTAMINATED WITH ANY OTHER GREASE, THE BEARING MUST BE SCRAPPED.

10. Lubricate the bearings.

    For bearing 406-040-339-ALL brown seal, use only Mobil 28.

ICN-407-A-040000-B-97499-00004-A-001-01

Figure 3. Tail Rotor Hanger Bearing - Inspection (Sheet 2 of 2)

POST OFFICE BOX 482 • FORT WORTH, TEXAS 76101

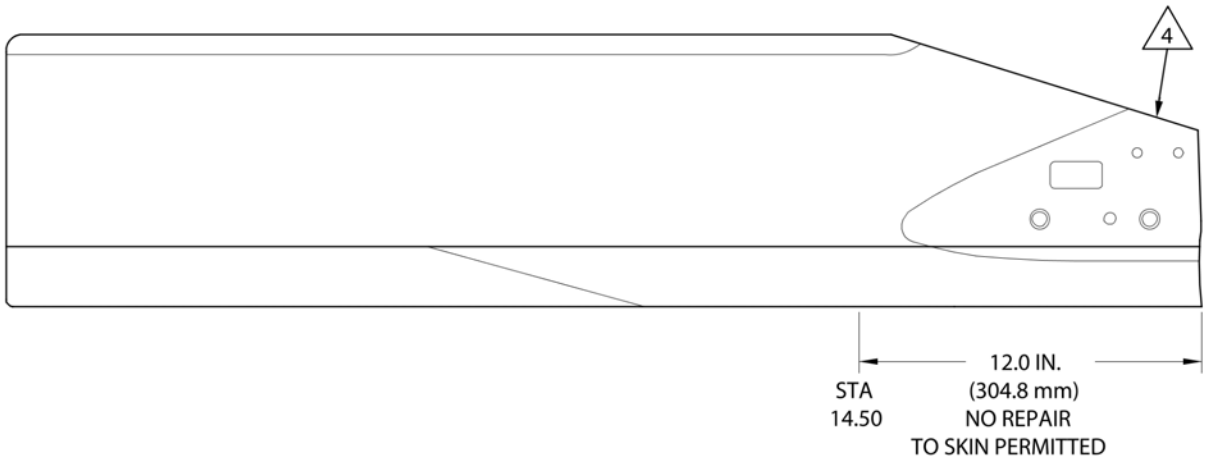

NOTES

1. This inspection applies to the tail rotor blade 407-016-001 only.

2. Do this inspection every 300 hours of component operation.

3. Remove the tail rotor blade.

4. Inspect the blade roots inboard of blade station 14.50 for signs of damage. Examine the inside of the blade root pocket (where the tail rotor yoke is inserted) for signs of crazing on the surface of the blade skins. If crazing is detected, remove the blade from service.

   Crazing will look like a series of minute cracks on the surface of the skin and will make the surface of the skin look cloudy.

5. Using a coin or heavy washer, lightly tap the outer surface of the blade in the blade root area to detect delamination in the skin. An area of delamination will sound hollow when gently tapped. If delamination is detected, remove the blade from service.

6. If no crazing or delamination is detected, return the blade to service.

7. Install the tail rotor blade.

8. Balance the tail rotor (Chapter 18).

ICN-407-A-040000-B-97499-00005-A-001-01

Figure 4. Tail Rotor Blade - Inspection (Sheet 1 of 1)

POST OFFICE BOX 482 • FORT WORTH, TEXAS 76101

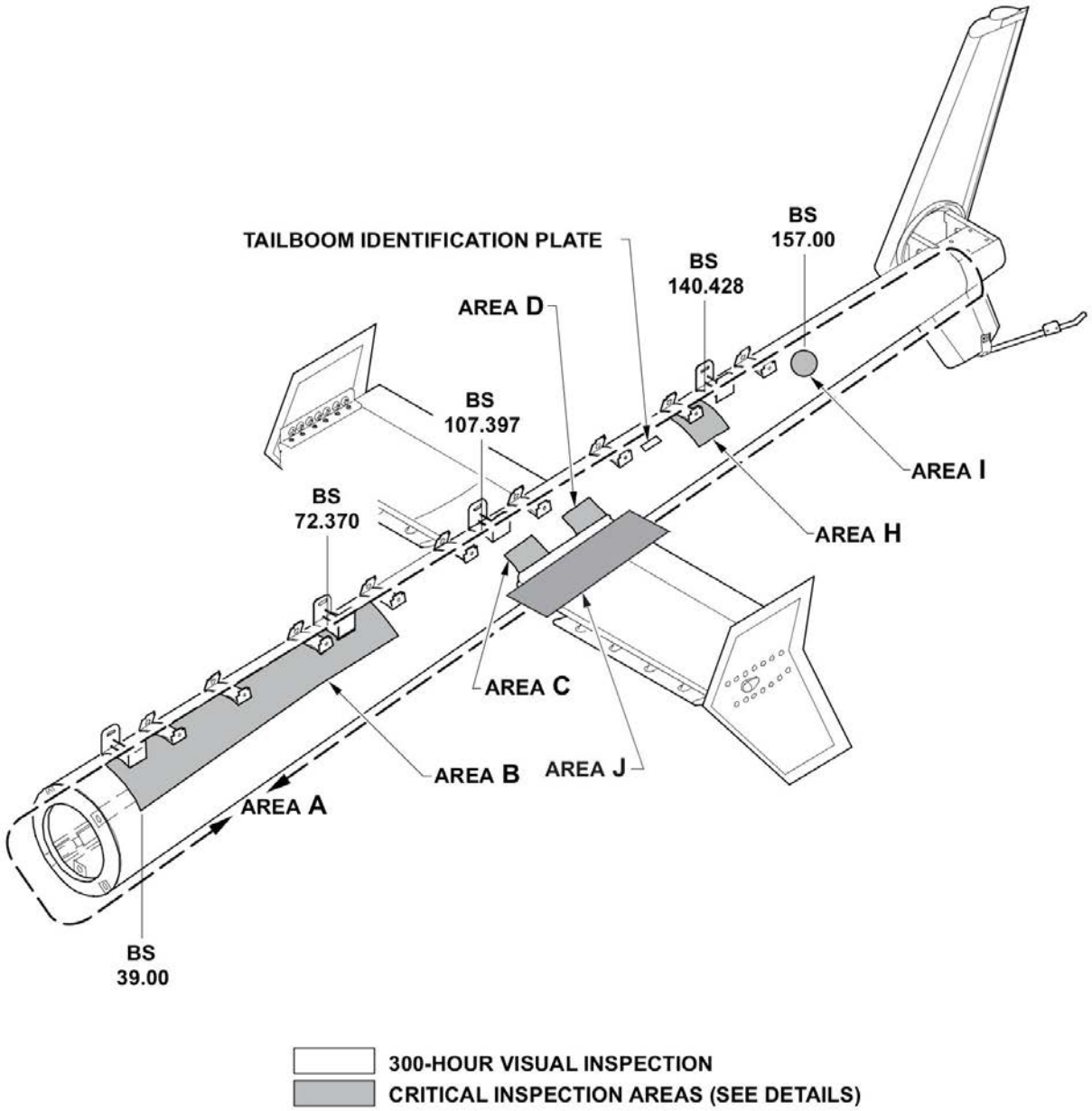

ICN-407-A-040000-B-97499-00006-A-002-01

Figure 5. Tailboom Assembly - 300 Hour Inspection (Sheet 1 of 6)

POST OFFICE BOX 482 • FORT WORTH, TEXAS 76101

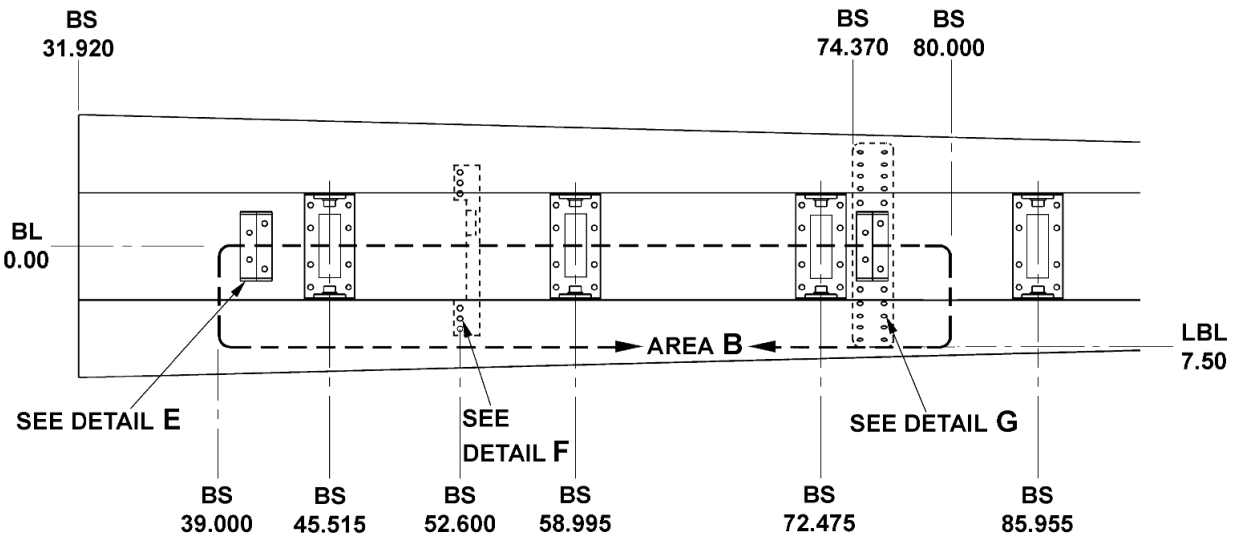

AREA B

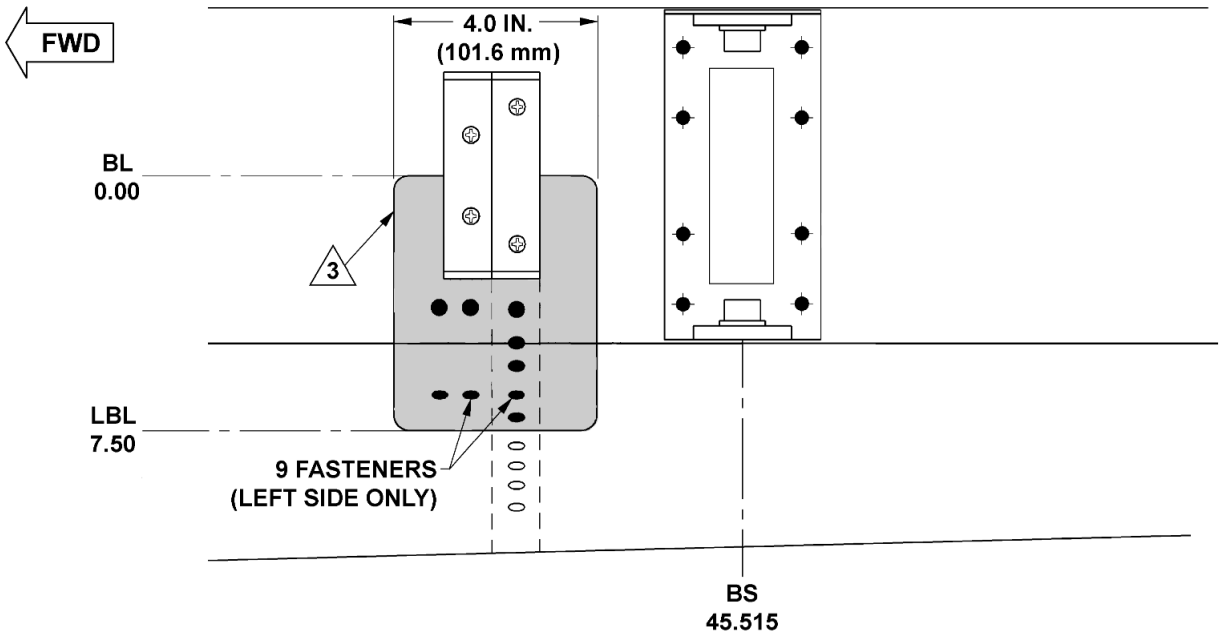

DETAIL E

GENERAL VISUAL INSPECTION (300 HOURS)
CRITICAL INSPECTION AREA (10X MAGNIFYING GLASS)

ICN-407-A-040000-B-97499-00007-A-002-01

Figure 5. Tailboom Assembly - 300 Hour Inspection (Sheet 2 of 6)

POST OFFICE BOX 482 • FORT WORTH, TEXAS 76101

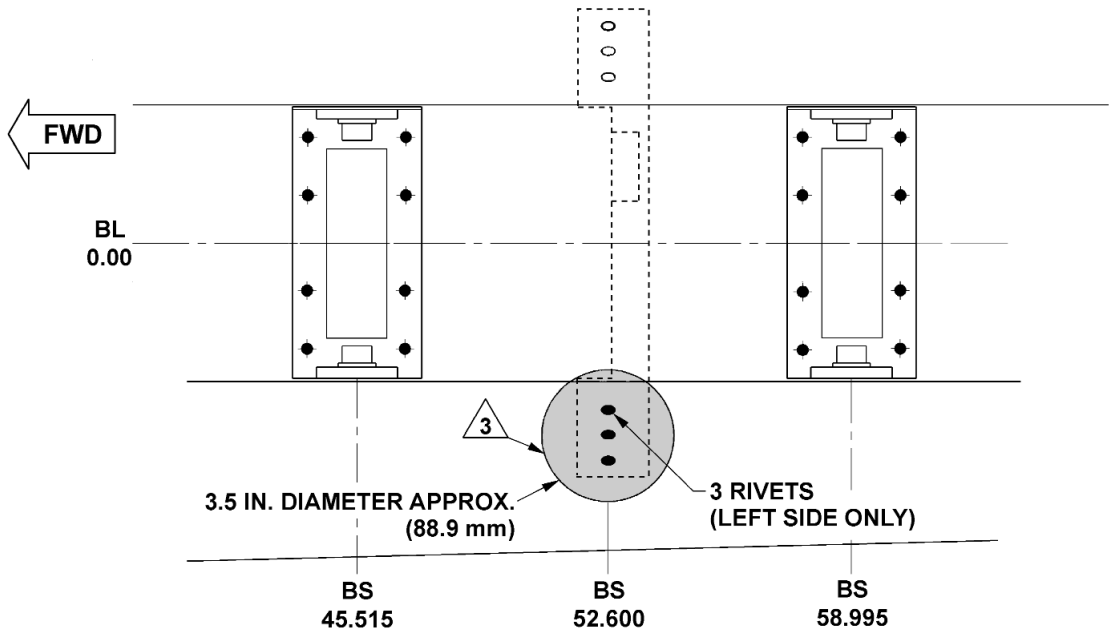

DETAIL F

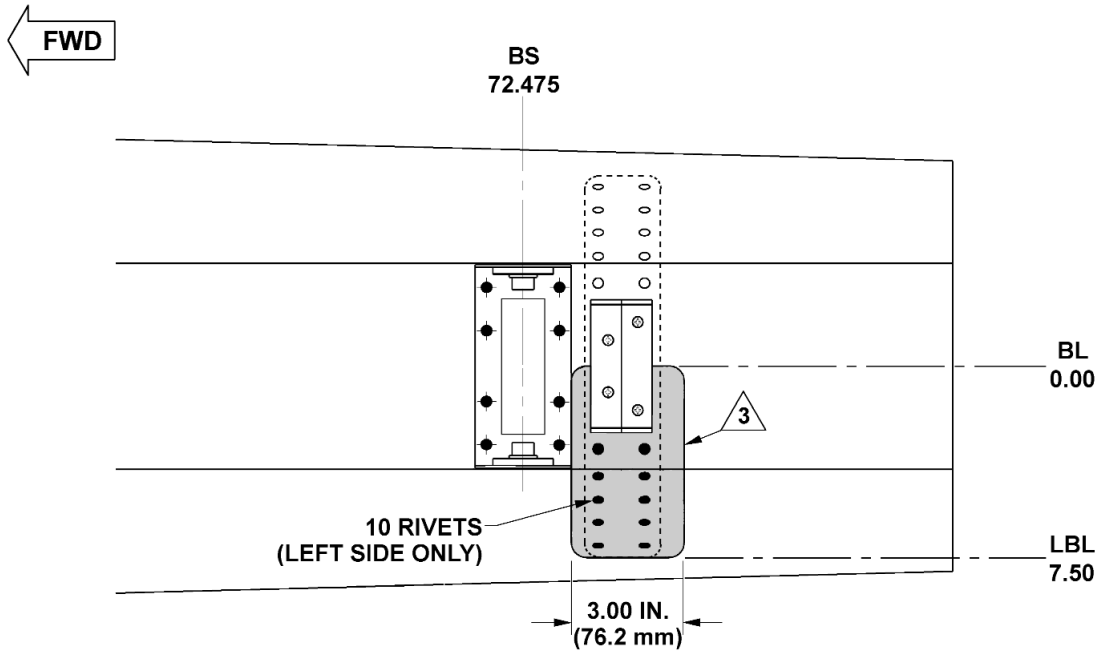

DETAIL G

GENERAL VISUAL INSPECTION (300 HOURS)
CRITICAL INSPECTION AREA (10X MAGNIFYING GLASS)

ICN-407-A-040000-B-97499-00008-A-002-01

Figure 5. Tailboom Assembly - 300 Hour Inspection (Sheet 3 of 6)

POST OFFICE BOX 482 • FORT WORTH, TEXAS 76101

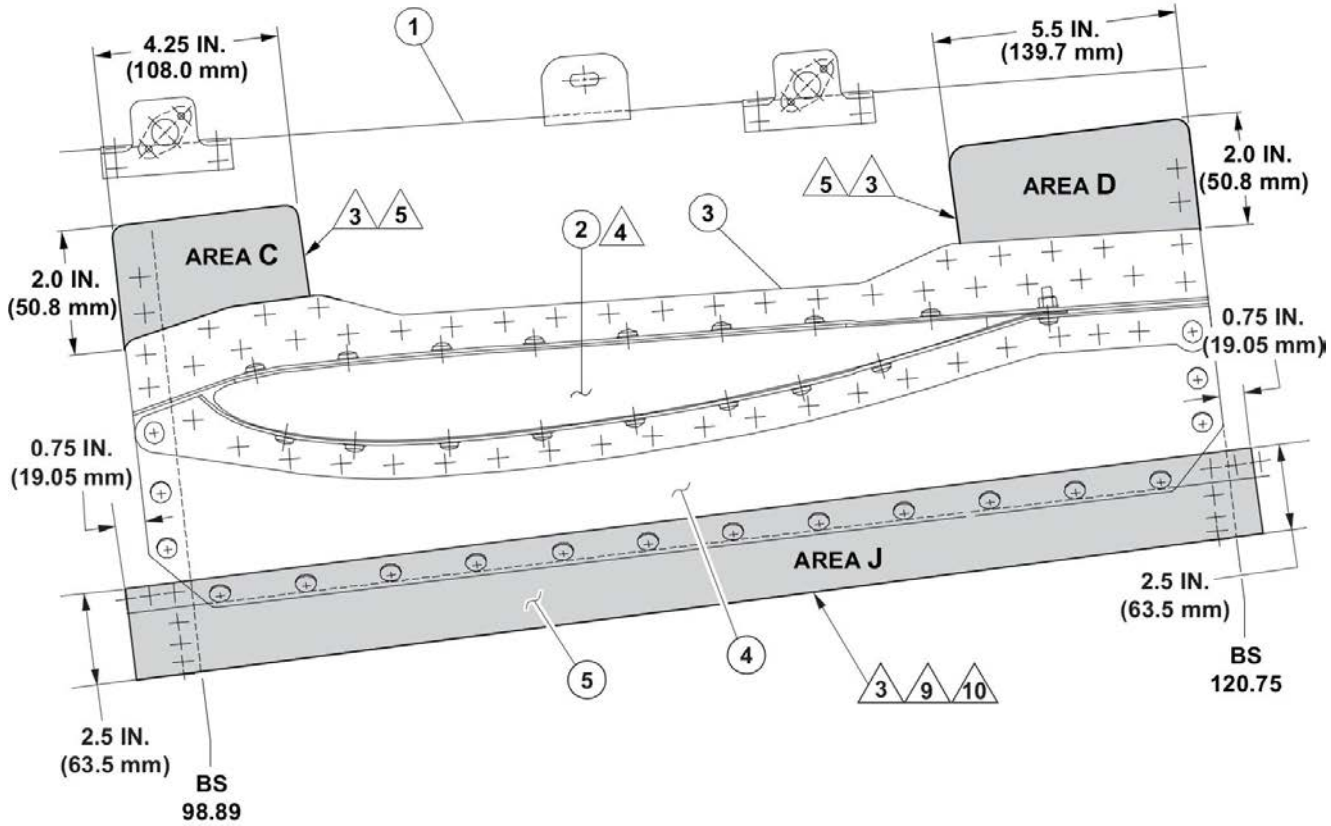

AREA C, AREA D AND AREA J
(HORIZONTAL STABILIZER NOT SHOWN FOR CLARITY)

GENERAL VISUAL INSPECTION (300 HOURS)
CRITICAL INSPECTION AREA (10X MAGNIFYING GLASS)

ICN-407-A-040000-B-97499-00009-A-002-01

Figure 5. Tailboom Assembly - 300 Hour Inspection (Sheet 4 of 6)

POST OFFICE BOX 482 • FORT WORTH, TEXAS 76101

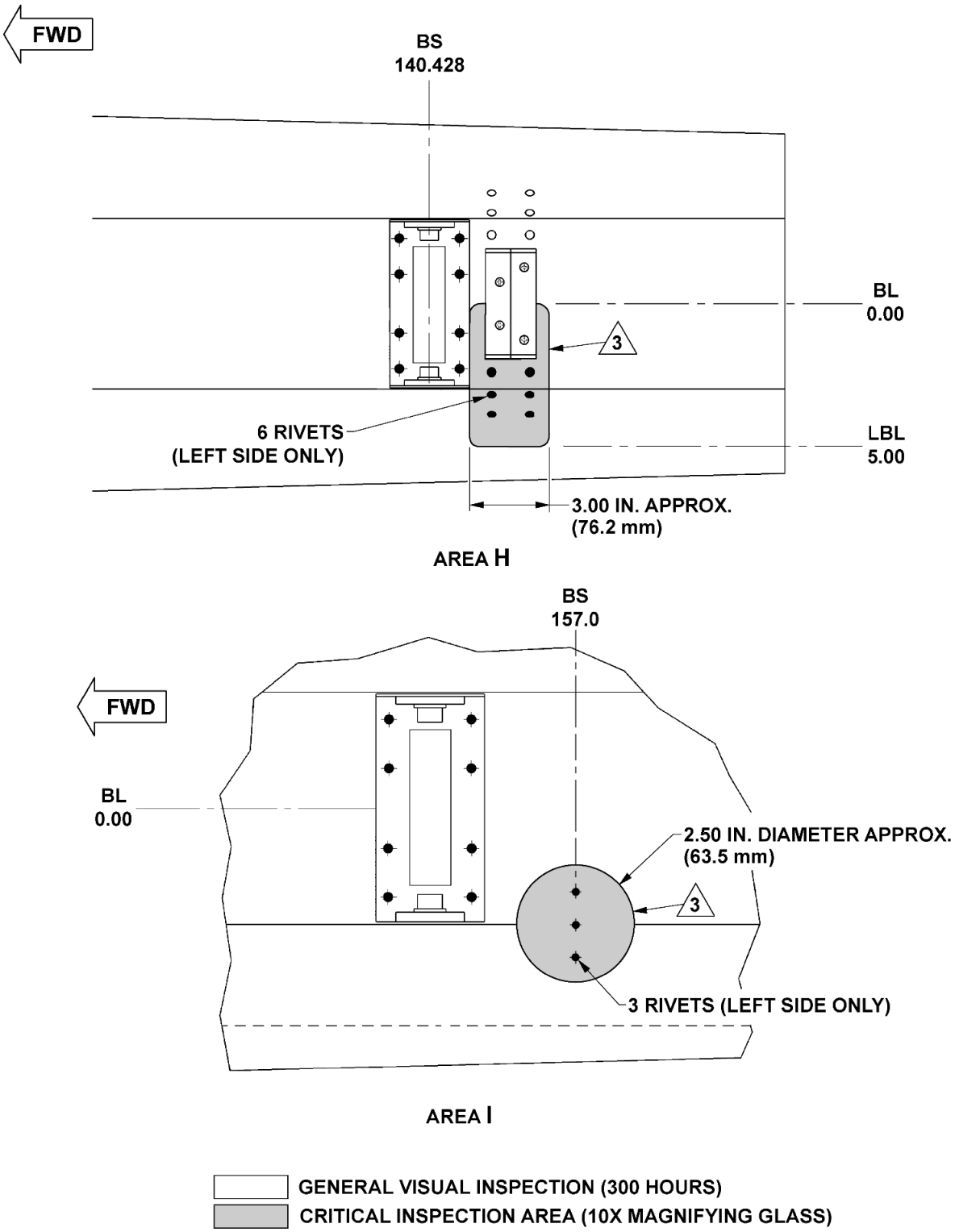

ICN-407-A-040000-B-97499-00010-A-002-01

Figure 5. Tailboom Assembly - 300 Hour Inspection (Sheet 5 of 6)

POST OFFICE BOX 482 • FORT WORTH, TEXAS 76101

1. Upper tailboom skin
2. Horizontal stabilizer
3. Left upper stabilizer attachment support
4. Left lower stabilizer attachment support
5. Lower tailboom skin

NOTES

AT EVERY 300 HOUR INTERVAL:

1. Inspect the complete tailboom assembly for general condition.

2. On the left side of the tailboom only, do a detailed inspection of all areas shown for cracks in the tailboom skin and loose rivets. Do not remove the paint or primer. If a loose rivet is found, remove rivet and inspect hole for cracks using a 10X magnifying glass. If no cracks are found, install correct diameter rivet. Do not exceed maximum diameter prescribed.

3. Use a 10X magnifying glass to inspect for cracks in tailboom skin and around fastener heads as indicated in area shown in Details E, F, G, and Areas C, D, H, I, and J.

4. Do not remove the horizontal stabilizer.

5. Pay close attention to the skin just above the edge of upper support.

6. Some tailboom components not shown for clarity.

7. If a crack is found on the tailboom skin, replace the tailboom before the next flight and contact Product Support Engineering.

8. Contact Product Support Engineering for changes or modifications to the structure in areas where a mandatory airworthiness inspection is specified.

9. Pay close attention to the skin just below the edge of lower support.

10. If left lower stabilizer support (4) is found cracked, remove support and perform inspection for cracks of the tailboom assembly skins located under the support using a 10X magnifying glass.

ICN-407-A-040000-B-97499-00011-A-002-01

Figure 5. Tailboom Assembly - 300 Hour Inspection (Sheet 6 of 6)

POST OFFICE BOX 482 • FORT WORTH, TEXAS 76101

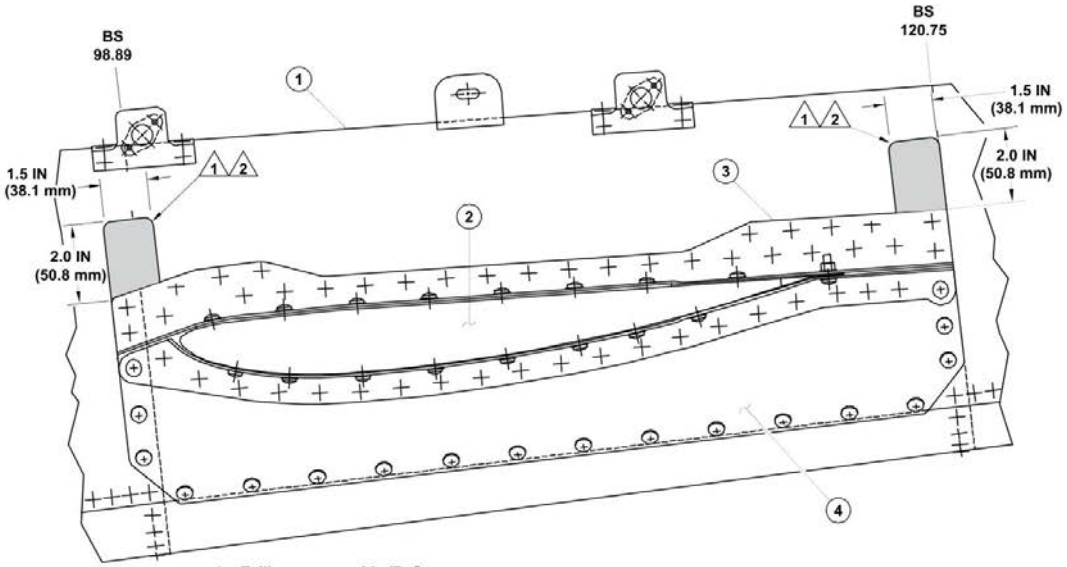

1. Tailboom assembly (Ref)
2. Horizontal stabilizer (Ref)
3. Upper support (Ref)
4. Lower support (407-023-800-121)

NOTES

1. Paint and primer to be removed from these areas (ASB 407-07-80).
2. Examine these areas for cracks on left side of tailboom only.
3. Horizontal stabilizer not shown for clarity.

Daily check area

ICN-407-A-040000-B-97499-00012-A-001-01

Figure 6. Tailboom Assembly - Daily Inspection (Sheet 1 of 2)

POST OFFICE BOX 482 • FORT WORTH, TEXAS 76101

DAILY INSPECTION

NOTES

1. Before the first flight of the day, do a check of the left side of the tailboom assembly in the areas where paint was removed for cracks, as follows:

   a) If required, use a clean cloth moistened with cleaning compound (C-318), prepared in accordance with manufacturer's recommendations, to remove any exhaust residues or dirt from both areas that require checking, as shown.

   b) Make sure that the tailboom skin is clean and that adequate lighting exists. Visually inspect the two areas where original paint and primer was removed and protected with clear paint coating. Look for cracks from a distance not exceeding 12 inches (30.48 cm).

   c) Pay close attention near the edge of the stabilizer upper support.

   d) If a crack is found on the tailboom skin, replace the tailboom before the next flight and contact Product Support Engineering.

   e) If no crack is found, the intent of the daily inspection is complete.

2. Make an entry in the helicopter records to show that the daily inspection is completed.

3. Comply with subsequent 100-hour inspection requirements described in Figure 4-7 when time is reached.

ICN-407-A-040000-B-97499-00013-A-001-01

Figure 6. Tailboom Assembly - Daily Inspection (Sheet 2 of 2)

POST OFFICE BOX 482 • FORT WORTH, TEXAS 76101

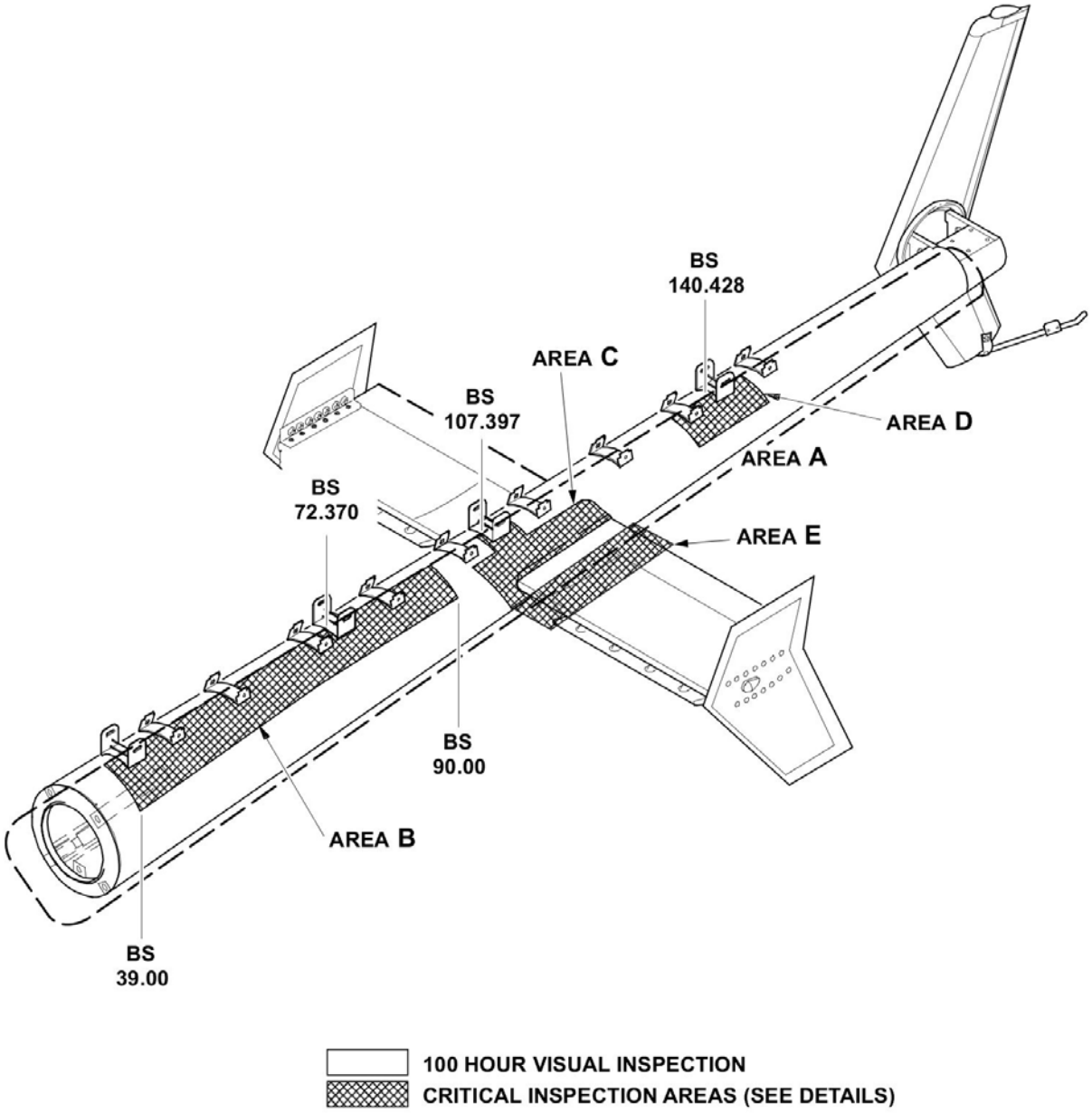

ICN-407-A-040000-B-97499-00014-A-002-01

Figure 7. Tailboom Assembly - 100 Hour Inspection (Sheet 1 of 8)

POST OFFICE BOX 482 • FORT WORTH, TEXAS 76101

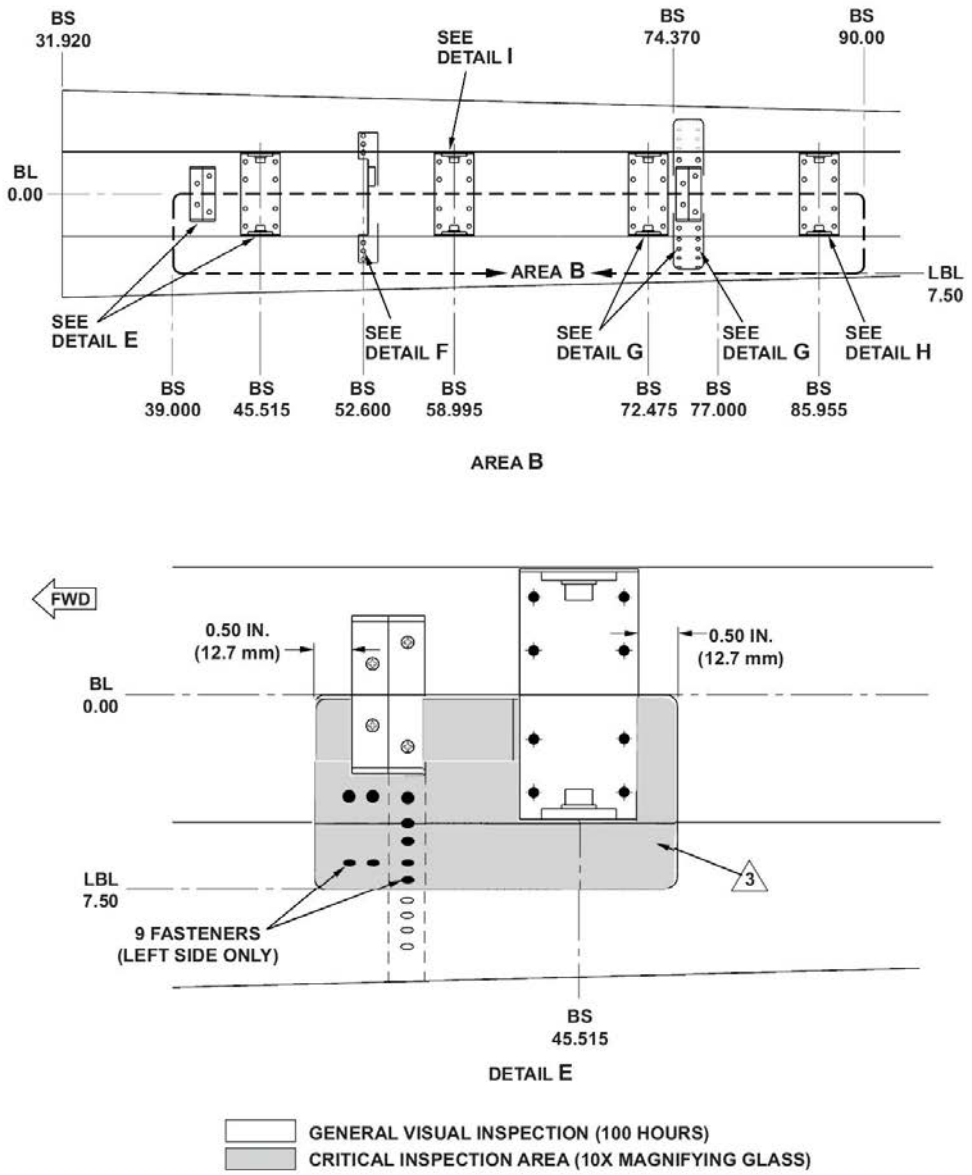

ICN-407-A-040000-B-97499-00015-A-002-01

Figure 7. Tailboom Assembly - 100 Hour Inspection (Sheet 2 of 8)

POST OFFICE BOX 482 • FORT WORTH, TEXAS 76101

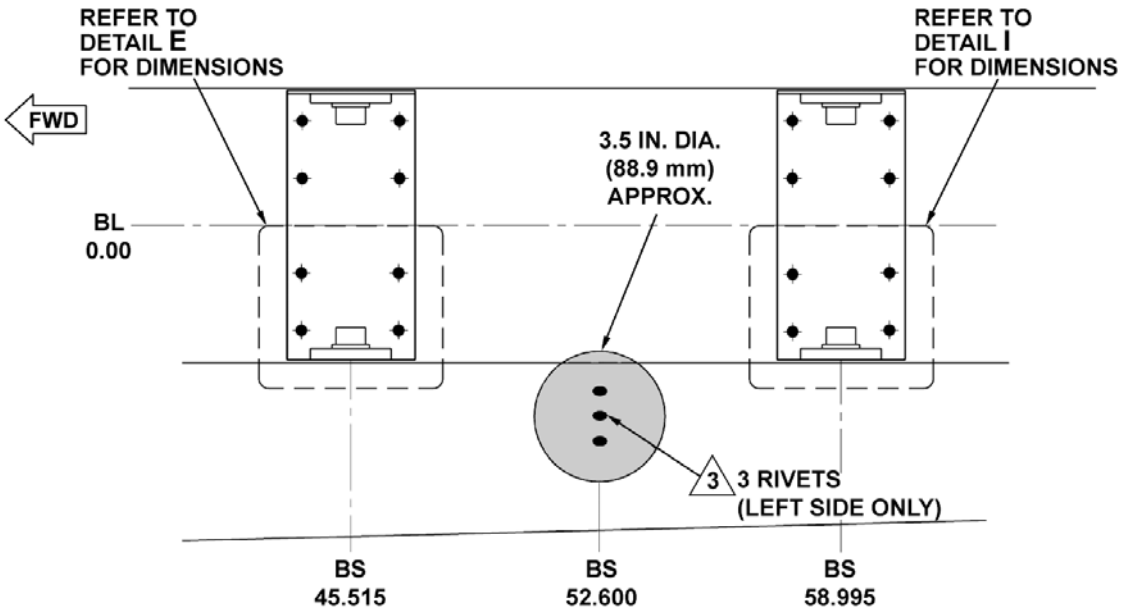

DETAIL F

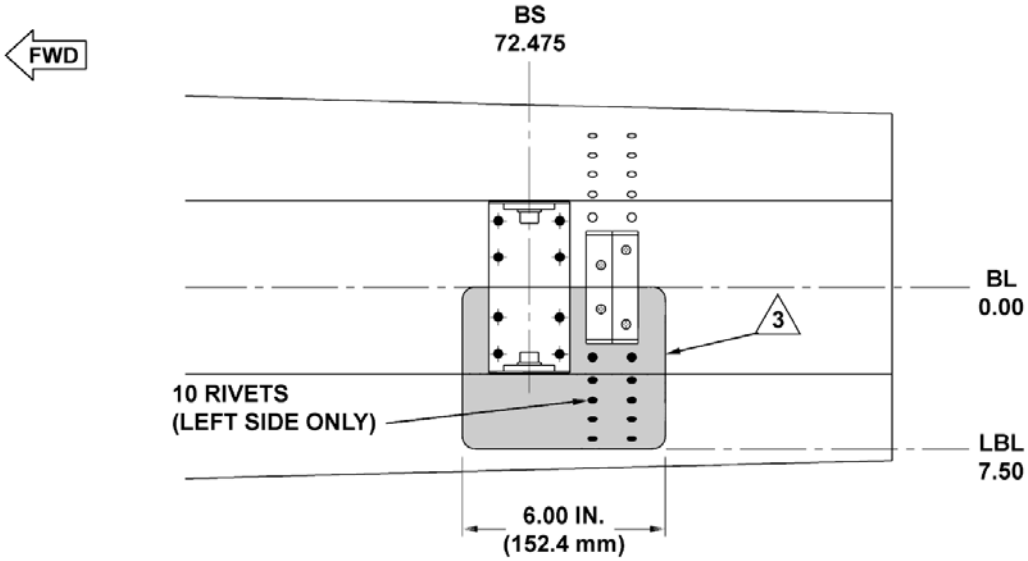

DETAIL G

GENERAL VISUAL INSPECTION (100 HOURS)
CRITICAL INSPECTION AREA (10X MAGNIFYING GLASS)

ICN-407-A-040000-B-97499-00016-A-002-01

Figure 7. Tailboom Assembly - 100 Hour Inspection (Sheet 3 of 8)

POST OFFICE BOX 482 • FORT WORTH, TEXAS 76101

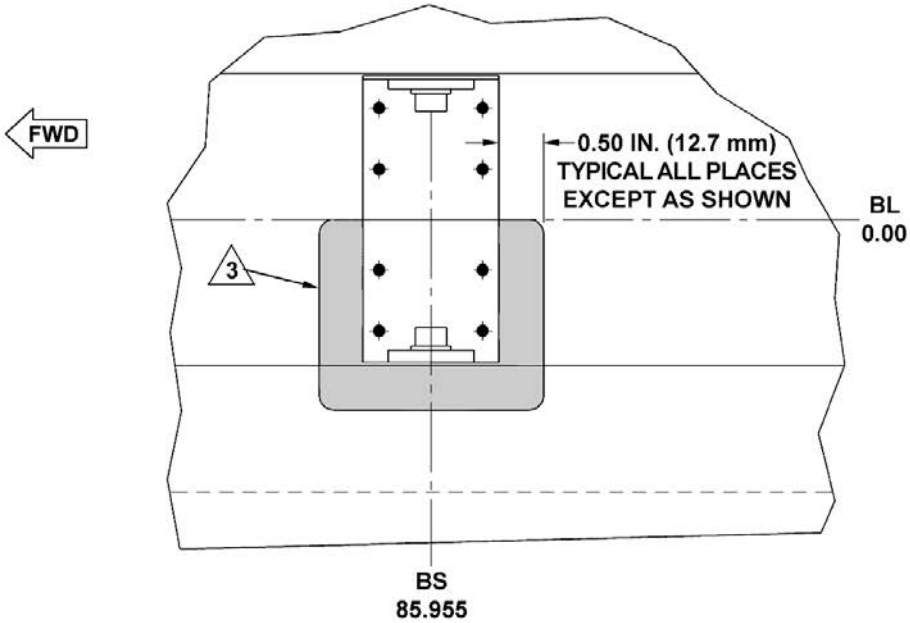

DETAIL H

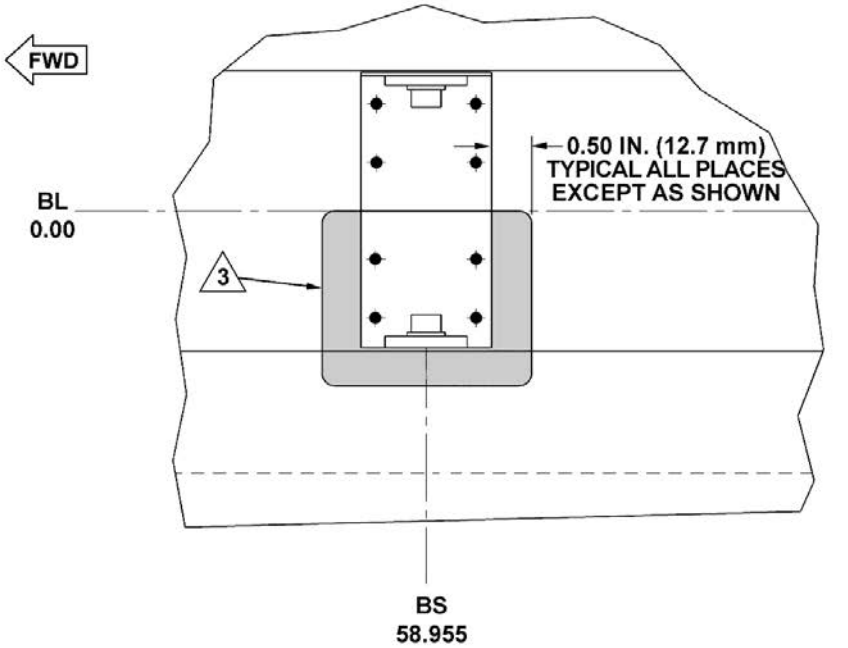

DETAIL I

GENERAL VISUAL INSPECTION (100 HOURS)
CRITICAL INSPECTION AREA (10X MAGNIFYING GLASS)

ICN-407-A-040000-B-97499-00017-A-002-01

Figure 7. Tailboom Assembly - 100 Hour Inspection (Sheet 4 of 8)

POST OFFICE BOX 482 • FORT WORTH, TEXAS 76101

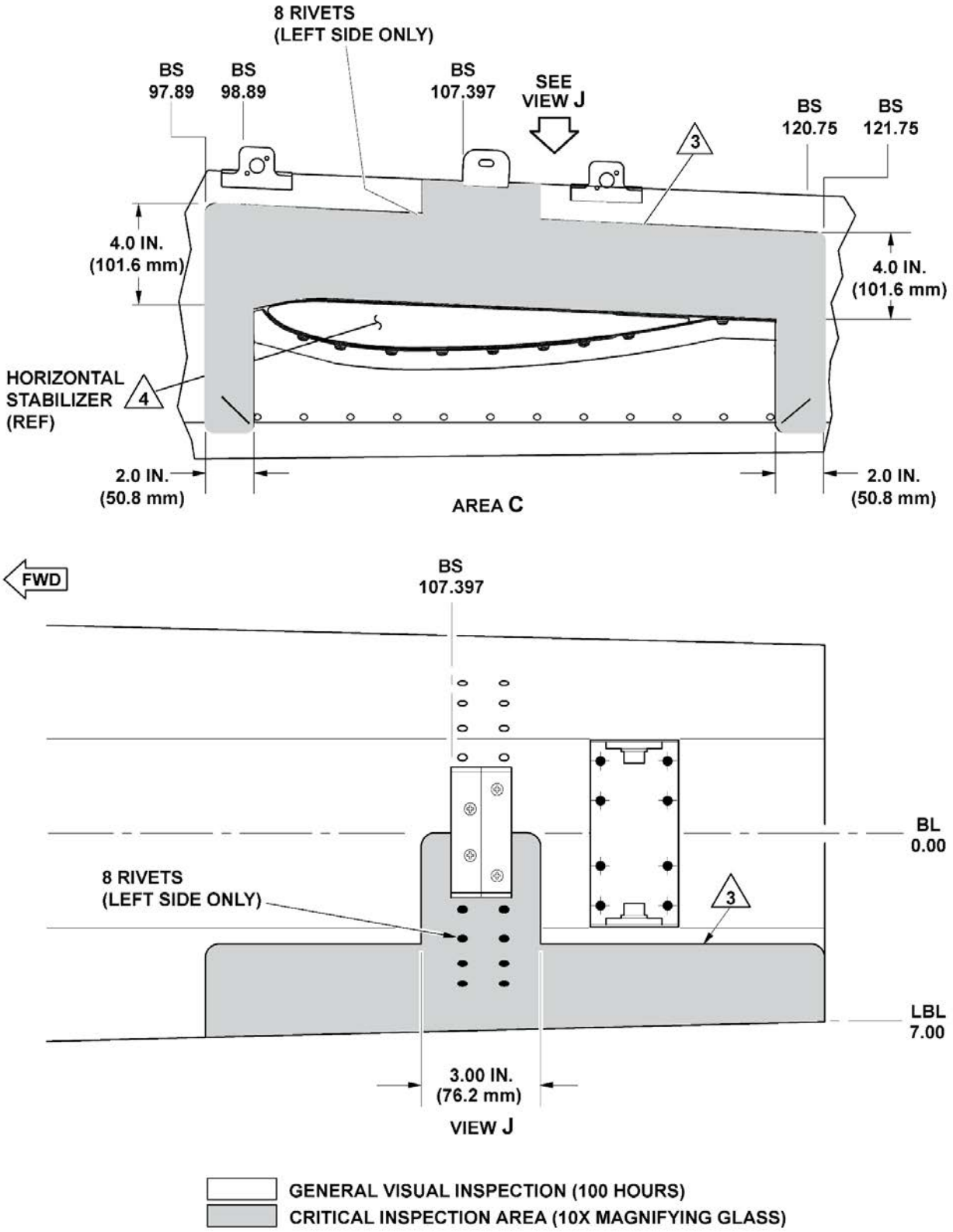

ICN-407-A-040000-B-97499-00018-A-002-01

Figure 7. Tailboom Assembly - 100 Hour Inspection (Sheet 5 of 8)

POST OFFICE BOX 482 • FORT WORTH, TEXAS 76101

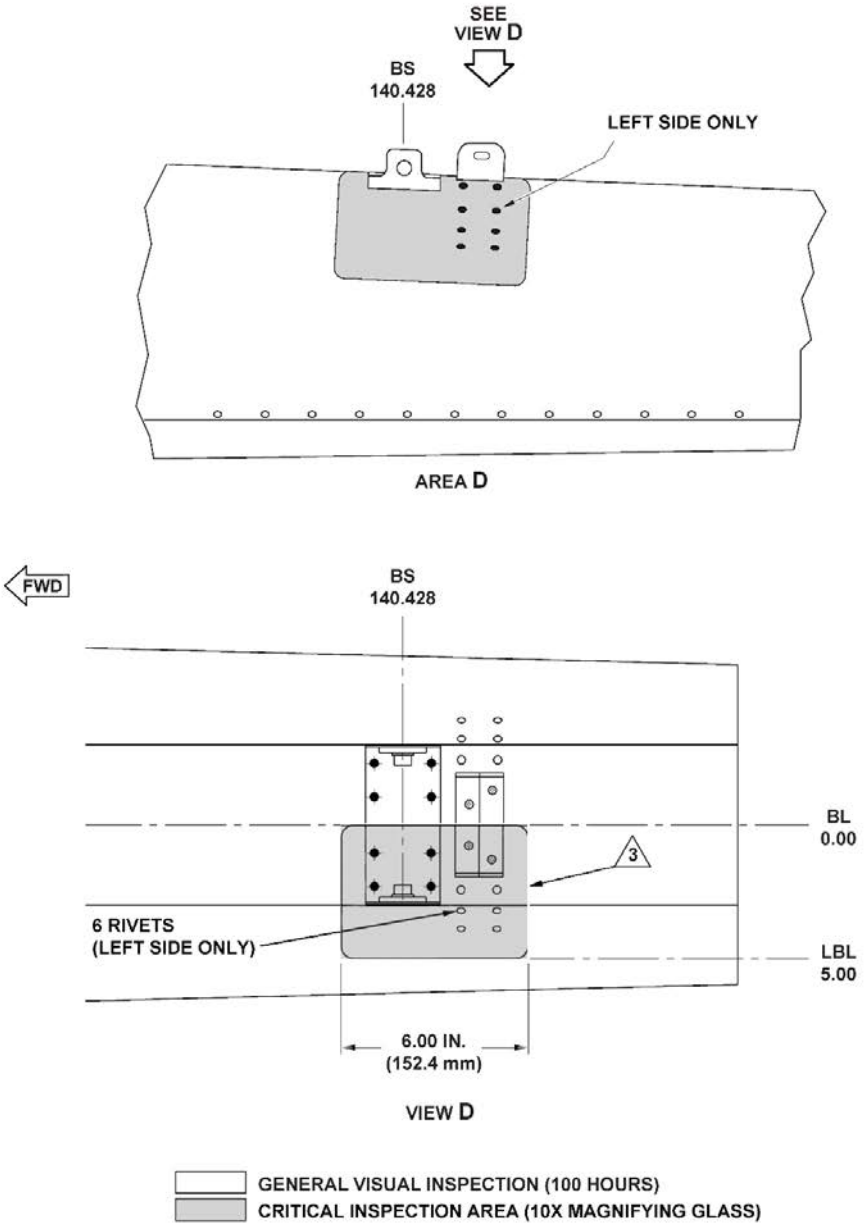

ICN-407-A-040000-B-97499-00019-A-002-01

Figure 7. Tailboom Assembly - 100 Hour Inspection (Sheet 6 of 8)

POST OFFICE BOX 482 • FORT WORTH, TEXAS 76101

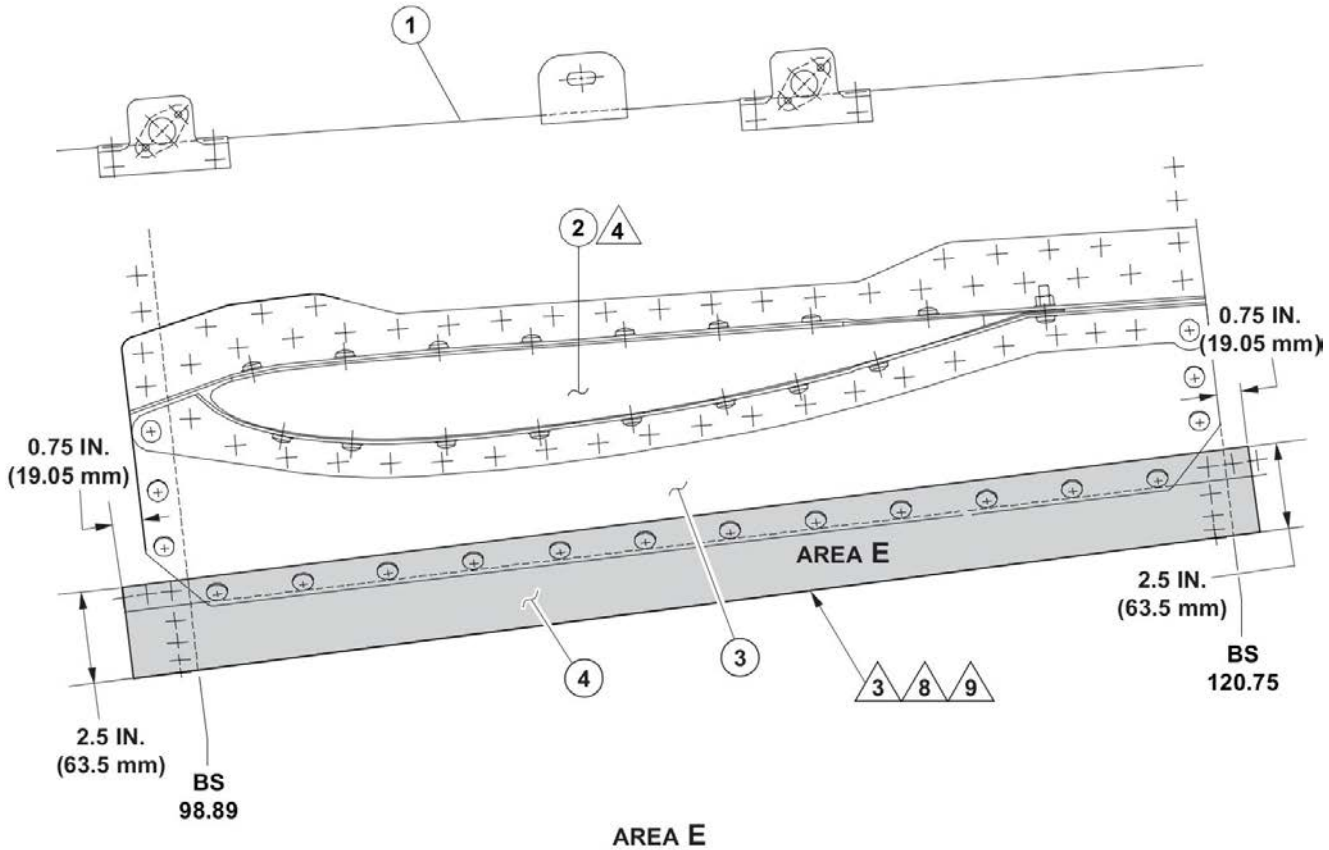

AREA E
(HORIZONTAL STABILIZER NOT SHOWN FOR CLARITY)

CRITICAL INSPECTION AREA (10X MAGNIFYING GLASS)

1. Upper tailboom skin (Ref)
2. Horizontal stabilizer (Ref)
3. Left lower stabilizer attachment support (Ref)
4. Lower tailboom skin (Ref)

ICN-407-A-040000-B-97499-00401-A-001-01

Figure 7. Tailboom Assembly - 100 Hour Inspection (Sheet 7 of 8)

POST OFFICE BOX 482 • FORT WORTH, TEXAS 76101

NOTES

AT EVERY 100 HOUR INTERVAL

1. **Inspect the complete tailboom assembly for general condition.**
2. **On the left side of the tailboom only, do a detailed inspection of all areas shown, for cracks in the tailboom skin and loose rivets. Do not remove the paint or primer. If a loose rivet is found, remove rivet and inspect hole for cracks using a 10X magnifying glass. If no cracks are found, install correct diameter rivet. Do not exceed maximum diameter prescribed.**

3 **Use a 10X magnifying glass to inspect for cracks in tailboom skin and around fastener heads as indicated in area shown in Details E, F, G, H, I, Views J, D, and Area C and E.**

4 **Do not remove the horizontal stabilizer.**

5. **Some tailboom components not shown for clarity.**
6. **If a crack is found on the tailboom skin, replace the tailboom before the next flight and contact Product Support Engineering.**
7. **Contact Product support Engineering for changes or modifications to structure in areas where a mandatory airworthiness inspection is specified.**

8 **Pay close attention to the skin just below the edge of lower support.**

9 **If left lower stabilizer support (3) is found cracked, remove support and perform inspection for cracks of the tailboom assembly skins located under the support using a 10X magnifying glass.**

ICN-407-A-040000-B-97499-00020-A-002-01

Figure 7. Tailboom Assembly - 100 Hour Inspection (Sheet 8 of 8)

POST OFFICE BOX 482 • FORT WORTH, TEXAS 76101

CHAPTER 05
INSPECTIONS AND COMPONENT OVERHAUL SCHEDULE

MAINTENANCE PLANNING INFORMATION

POST OFFICE BOX 482 • FORT WORTH, TEXAS 76101

Intentionally blank page

POST OFFICE BOX 482 • FORT WORTH, TEXAS 76101

List of Effective Data Modules

The listed documents are included in issue 011, dated 2025-06-17, of this publication.

C = Changed data module, N = New data module

Document title	Data module code / Seq number		Issue date	Applicable to
Inspections and Component Overhaul Schedule - General	DMC-407-A-05-00-00-00A-028A-A / 00012		2020-01-06	ALL
Inspections and Component Overhaul Schedule - Items Not Covered in the Inspection	DMC-407-A-05-00-00-01A-028A-A / 00013		2020-01-06	ALL
Inspections and Component Overhaul Schedule - Crash Damage	DMC-407-A-05-00-00-02A-028A-A / 00014		2020-01-06	ALL
Inspections and Component Overhaul Schedule - Types of Inspections	DMC-407-A-05-00-00-03A-028A-A / 00015		2020-01-06	ALL
Inspections and Component Overhaul Schedule - Definitions	DMC-407-A-05-00-00-00A-018A-A / 00016		2020-01-06	ALL
Inspections and Component Overhaul Schedule - Inspection and Overhaul Tolerance	DMC-407-A-05-00-00-04A-028A-A / 00017		2022-10-03	ALL
Scheduled Inspections - Description	DMC-407-A-05-00-00-00A-281A-A / 00018		2022-06-17	ALL
Scheduled Inspections - Progressive Inspection - Event 1	DMC-407-A-05-40-00-00A-281A-A / 00019		2024-06-06	ALL
Scheduled Inspections - Progressive Inspection - Event 2	DMC-407-A-05-40-00-01A-281A-A / 00020		2020-11-23	ALL
Scheduled Inspections - Progressive Inspection - Event 3	DMC-407-A-05-40-00-02A-281A-A / 00021		2024-12-03	ALL
Scheduled Inspections - Progressive Inspection - Event 4	DMC-407-A-05-40-00-03A-281A-A / 00022	C	2025-06-17	ALL
Scheduled Inspections - Progressive Inspection - Event 5	DMC-407-A-05-40-00-04A-281A-A / 00023	C	2025-06-17	ALL
Scheduled Inspections - Progressive Inspection - Event 6	DMC-407-A-05-40-00-05A-281A-A / 00024		2021-07-08	ALL
Scheduled Inspections - Airframe Periodic Inspection	DMC-407-A-05-40-00-06A-281A-A / 00025		2020-01-06	ALL
Scheduled Inspections - 300 Hour Inspection for Optional Equipment	DMC-407-A-05-40-00-08A-281A-A / 00026		2022-10-03	ALL
Scheduled Inspections - 300 Hour or 12 Month Inspection	DMC-407-A-05-40-00-08A-281B-A / 00027		2022-10-03	ALL
Scheduled Inspections - 600 Hour Inspection	DMC-407-A-05-40-00-09A-281A-A / 00028		2020-01-06	ALL
Scheduled Inspections - 600 Hour or 12 Month Inspection	DMC-407-A-05-40-00-10A-281A-A / 00029	C	2025-06-17	ALL
Scheduled inspection - 1 Month Inspection	DMC-407-A-05-40-00-10B-281A-A / 00030		2022-05-26	ALL
Scheduled Inspections - 12 Month Inspection	DMC-407-A-05-40-00-11A-281A-A / 00031		2022-05-26	ALL
Scheduled Inspections - 24 Month Inspection	DMC-407-A-05-40-00-12A-281A-A / 00032		2022-10-03	ALL
Scheduled Inspections - 1200 Hour Inspection	DMC-407-A-05-40-00-13A-281A-A / 00033		2022-05-26	ALL
Scheduled Inspections - 1200 Hour or 24 Month Inspection	DMC-407-A-05-40-00-14A-281A-A / 00034		2021-07-08	ALL

POST OFFICE BOX 482 • FORT WORTH, TEXAS 76101

Document title	Data module code / Seq number		Issue date	Applicable to
Scheduled Inspections - 2500 Hour Inspection	DMC-407-A-05-40-00-15A-281A-A / 00035		2020-01-06	ALL
Scheduled Inspections - Miscellaneous Inspection	DMC-407-A-05-40-00-16A-281A-A / 00036		2020-01-06	ALL
Special Inspections - Torque/Friction Check	DMC-407-A-05-40-00-00A-283A-A / 00037		2024-06-06	ALL
Special Inspections - Freewheel Lubrication System	DMC-407-A-05-40-00-01A-283A-A / 00038		2020-11-23	ALL
Conditional Inspections - Description	DMC-407-A-05-50-00-00A-284B-A / 00039		2022-05-26	ALL
Conditional Inspections - Hard Landing	DMC-407-A-05-50-00-01A-284A-A / 00040		2021-07-08	ALL
Conditional Inspections - Sudden Stoppage - Main Rotor - Power ON or OFF	DMC-407-A-05-50-00-02A-284A-A / 00041		2020-01-06	ALL
Conditional Inspections - Sudden Stoppage - Tail Rotor - Power ON or OFF	DMC-407-A-05-50-00-03A-284A-A / 00042		2020-01-06	ALL
Conditional Inspections - Main Rotor Overspeed	DMC-407-A-05-50-00-04A-284A-A / 00043		2020-01-06	ALL
Conditional Inspections - Overtorque	DMC-407-A-05-50-00-05A-284A-A / 00044	C	2025-06-17	ALL
Conditional Inspections - Engine Compressor Stall or Surge	DMC-407-A-05-50-00-06A-284A-A / 00045		2021-11-23	ALL
Conditional Inspections - After Lightning Strike	DMC-407-A-05-50-00-07A-284A-A / 00046		2020-01-06	ALL
Conditional Inspections - Strike Impact to Auxiliary Finlets by Main Rotor Blades	DMC-407-A-05-50-00-01A-280A-A / 00047		2022-10-03	ALL
Component Interim Inspection Schedule - Description	DMC-407-A-05-10-00-01A-281A-A / 00048		2024-12-03	ALL
Component Overhaul Schedule - Description	DMC-407-A-05-10-00-02A-281A-A / 00049		2024-12-03	ALL
Appendix A - M407 Inspection - Checklist	DMC-407-A-05-00-00-00A-280B-A / 00050		2020-01-06	ALL
Appendix B - M407 Inspection - Defect Sheet	DMC-407-A-05-00-00-01A-280C-A / 00051		2020-01-06	ALL

POST OFFICE BOX 482 • FORT WORTH, TEXAS 76101

Inspections and Component Overhaul Schedule - General

This chapter contains the time limit intervals and the requirements for the Scheduled Inspection, Special Inspection, Conditional Inspection, and for the Component Overhaul Schedule.

WARNING

FAILURE TO CORRECT CONDITIONS SUCH AS, BUT NOT LIMITED TO, CORROSION, EROSION, MECHANICAL DAMAGE, OR OBVIOUS WEAR FOUND DURING A SCHEDULED INSPECTION COULD SERIOUSLY AFFECT THE AIRWORTHINESS OF THE HELICOPTER.

The inspection intervals given in this chapter are the maximum permitted. Do not exceed these intervals. The owner/operator is responsible for increasing the scope and the frequency of the inspections as necessary. Make sure the helicopter is maintained safely during all unusual local changes, such as environmental conditions, helicopter use, etc. You can request changes to the requirements in this chapter through the local aviation authority.

The inspection intervals and the Component Overhaul Schedule given in this chapter are applicable only to Bell Helicopter Textron approved parts.

NOTE

The time period given for the overhaul of a component (or the failure to give a time period for the overhaul of a component) does not constitute a warranty of any kind. The only warranty applicable to the helicopter or any component is the warranty included in the Purchase Agreement for the helicopter or the component.

The Time Between Overhaul (TBO) and the inspection periods are determined through experience, tests, Lead-The-Fleet (LTF) , or any other special programs and the judgement of Bell Helicopter Textron engineers. They are subject to change only by Bell Helicopter Textron or an approved airworthiness authority.

Changes to TBO will be introduced by either revision to the Maintenance Manual 407-A-05-10-00-02A-281A-A / 00049 or a Technical Bulletin.

Every calendar and hourly inspection is a thorough visual inspection to determine the airworthiness of the helicopter and the components. Qualified persons must do the inspections in accordance with quality standard aircraft practices and the applicable maintenance manuals. Bell Helicopter Textron considers that it is mandatory to obey all the applicable Alert Service Bulletins (ASB) and the Airworthiness Directives (AD) .

Component operating time records are necessary for components that have scheduled maintenance procedures which are different from those of the airframe. It is the owner/operator's responsibility to keep the Historical Service Records for the applicable component and to do the necessary maintenance procedures.

Before each inspection, remove or open the necessary cowlings, fairing, inspection doors, and panels.

POST OFFICE BOX 482 • FORT WORTH, TEXAS 76101

Intentionally blank page

POST OFFICE BOX 482 • FORT WORTH, TEXAS 76101

Inspections and Component Overhaul Schedule - Items Not Covered in the Inspection

This manual does not include the specific inspection intervals for some components such as the compass calibration and the pitot static test. These specific inspection intervals are given by your government regulatory authority. Refer to their requirements for these specific inspections.

The owner/operator of the helicopter is responsible for the maintenance done on the helicopter. It is the owner/operator's responsibility to:

Establish, maintain and review the log books for discrepancies.

Make sure the Alert Service Bulletins (ASB) , the Airworthiness Directives (AD) , and the special inspections are done when they are required to be done.

Make sure the scheduled inspections, the special inspections, and the required tests for all of the installed kits are complied with.

Make sure all parts and components for which Historical Service Records are required have documented traceability to their original installation in the helicopter.

Make sure all limited life parts that have completed their published operating limits are replaced.

Make sure all of the components that have completed their published overhaul periods are overhauled.

Make sure all of the maintenance that is done on the helicopter is done by an approved maintenance organization.

The maintenance organization/person doing the maintenance is responsible for the quality of the maintenance done.

The owner/operator may choose to ask the maintenance organization/person doing the maintenance to perform the tasks listed by prior arrangement through a separate formal agreement.

POST OFFICE BOX 482 • FORT WORTH, TEXAS 76101

Intentionally blank page

POST OFFICE BOX 482 • FORT WORTH, TEXAS 76101

Inspections and Component Overhaul Schedule - Crash Damage

Because of the many possible combinations that can result from crash damage, it is not possible to include the specific repair tasks in this category. The helicopter mechanic must make an analysis of the crash damage for each situation. Do the repair in accordance with the degree of damage to the specific part and the applicable repair procedures in this manual. Call Bell Helicopter Textron Product Support Engineering with your analysis of the crash damage.

POST OFFICE BOX 482 • FORT WORTH, TEXAS 76101

Intentionally blank page

POST OFFICE BOX 482 • FORT WORTH, TEXAS 76101

Inspections and Component Overhaul Schedule - Types of Inspections

The maintenance procedures may include scheduled inspections, special inspections, conditional inspections, component interim inspections, and component overhaul inspections.

Scheduled inspections must occur at specified operating intervals. The intervals may be in operating time (hours), cycles, torque events (RIN), calendar (days, months, years) or other assigned units. This makes sure that the helicopter is airworthy.

Special inspections are of a temporary nature or of a special interval that is not consistent with the scheduled inspections.

Conditional inspections do not occur at a specified time. A conditional inspection is the result of known or suspected unusual event, known or suspected malfunctions, or defects.

An interim inspection occurs between overhauls.

The component overhaul schedule gives the elapsed operating time at which a component must be removed, disassembled, examined for condition, and overhauled, in accordance with data approved by Bell Helicopter Textron.

Lubrication and servicing requirements are in addition to those stated in this chapter (BHT-407-MM, Chapter 12).

For corrosion control refer to the Corrosion Control Guide, CSSD-PSE-87-001, Corrosion Control Guide and the BHT-ALL-SPM, Standard Practices Manual.

Refer to the Rolls-Royce Engine Operations and Maintenance Manual for the scheduled inspection, special inspection, conditional inspection, and component overhaul schedule.

For the common Bell Helicopter Textron approved optional equipment that is integrated into this maintenance manual, refer to this chapter for the scheduled inspection, conditional inspection, component interim inspection, and component overhaul inspection.

For all other Bell Helicopter Textron approved equipment, refer to the applicable Supplement in BHT-407-MM, Chapter 99 of this manual for the scheduled inspection, special inspection, conditional inspection, component interim inspection, and component overhaul inspection.

For the inspection requirements for optional equipment approved under Supplement Type Approval/Certificate (STA/STC) , refer to the applicable STA/STC documentation. Maintenance and inspection of these items are the responsibility of the owner/ operator.

POST OFFICE BOX 482 • FORT WORTH, TEXAS 76101

Intentionally blank page

POST OFFICE BOX 482 • FORT WORTH, TEXAS 76101

Inspections and Component Overhaul Schedule - Definitions

1. Examine

Look carefully to find the condition of the component. Find how that condition relates to a specific standard.

2. Condition

The state of an item compared to a known standard.

3. Security

The presence of attaching parts that are properly tightened or appear to be, and the presence of properly installed (as required) locking devices such as lockwire, cotter pins, or other.

4. Standard

A specified rule or measure that you use to find the condition of a component.

5. Damage

Physical deterioration of a component.

6. Discard

Reject a component that has damage that cannot be repaired. To permanently remove from service.

7. Inspection

A procedure that includes checking, inspecting, and examining a system or a component.

8. Non Scheduled Inspection

An inspection that has not been scheduled.

9. Periodic Inspection

An inspection which is repeated at equal time intervals.

10. Progressive Inspection

A scheduled inspection that is divided into smaller segments. This makes the best use of the time and the resources available.

11. Maintenance

The servicing and/or the repair of a helicopter, a system, or a component that keeps it serviceable.

12. Preventive Maintenance

To do small maintenance action(s) on a regular basis to prevent non scheduled maintenance.

13. Operating Time

Actual flight or calendar time that must be recorded in the Historical Service Records or in the helicopter logs. The operating time is specified as:

13.1. Time in Service (Flight Time)

The measured time which starts the moment the helicopter leaves the ground and continues until it touches the ground at the next point of landing. The time when the helicopter is on the ground, with the engine and the rotor turning, is not included.

POST OFFICE BOX 482 • FORT WORTH, TEXAS 76101

13.2. Calendar Time

The elapsed time starts on the day the inspection is completed, the component is installed, or the rotor is turned for the first time and ends on the last day of the month that the time limit expires. Calendar time is continuous. Calendar time does not stop when you remove a component, put the helicopter in storage, etc.

14. Maintenance Zone

A specified area of the helicopter, which may contain more than one system or more than one group of related components. Maintenance zones are used when you do a progressive inspection.

15. Lead-the-Fleet (LTF) Program

This is a program to validate the performance of an approved product improvement or a change to a maintenance interval. The engineering aspects of this change are approved. The program is closely monitored by Bell Helicopter Textron in an operational environment with selected operators.

16. Special Programs

These are approved programs that may be initiated under certain special conditions to meet specific requirements. These programs will be clearly defined through a plan and the engineering and maintenance aspects will be approved by the regulatory authorities.

POST OFFICE BOX 482 • FORT WORTH, TEXAS 76101

Inspections and Component Overhaul Schedule - Inspection and Overhaul Tolerance

WARNING

DO NOT APPLY THESE TOLERANCES TO PARTS/COMPONENTS WITH A LIMITED AIRWORTHINESS LIFE (407-A-04-00-00-00A-288A-A / 00010).

The Bell Textron approved tolerances for scheduled inspections, special inspections, interim inspections, and overhaul intervals, unless otherwise stated, is 10% or up to a maximum of 300 hours operating time/6 months calendar time, whichever is less. The tolerances are established for maintenance scheduling convenience only.

Scheduled inspections, special inspections, interim inspections, or overhaul intervals required beyond the stated tolerances must be approved by Product Support Engineering.

NOTE

The following is only applicable for those operators whose governing aviation authority requires to specifically approve the inspection and overhaul tolerance.

If approval of the inspection and overhaul tolerance is required by the applicable governing aviation authority, this is the responsibility of the owner/operator.

Refer to the Rolls-Royce Engine Operation and Maintenance Manual for inspection and overhaul tolerances.

The following provide examples of when hourly, calendar, or hourly/calendar inspection tolerances have been applied:

Table 1. Hourly Example (10% or up to a Maximum of 300 Hours, Whichever is Less):

300-HOUR INSPECTION DUE AT:	MAXIMUM ALLOWED TOLERANCE	INSPECTION CARRIED OUT AT:	NEXT 300-HOUR INSPECTION DUE AT:
3400 Hours	10% of 300 hours = 30 hours	3430 Hours (10% tolerance applied)	3730 Hours
3730 Hours	10% of 300 hours = 30 hours	3750 Hours (within 10% tolerance)	4050 Hours
4050 Hours	10% of 300 hours = 30 hours	4050 Hours (tolerance not applied)	4350 Hours

Table 2. Calendar Example (10% or up to a Maximum of 6 Months Calendar Time, Whichever is Less):

12-MONTH INSPECTION DUE ON:	MAXIMUM ALLOWED TOLERANCE	INSPECTION CARRIED OUT ON:	NEXT 12-MONTH INSPECTION DUE ON:
June 10, 2010	10% of 12 months = 1.2 months	July 12, 2010 (within 10% tolerance)	July 31, 2011 (1)
July 31, 2011	10% of 12 months = 1.2 months	June 15, 2011 (completed early)	June 30, 2012 (1)
June 30, 2012	10% of 12 months = 1.2 months	June 30, 2012 (tolerance not applied)	June 30, 2013 (1)

NOTE:

1 The last day of the month applies for the next inspection (407-A-05-00-00-00A-018A-A / 00016, calendar time).

Table 3. Hourly/Calendar Example (10% or up to a Maximum of 300 Hours Operating Time/6 Months Calendar Time, Whichever is Less):

1200-HOUR/ 24-MONTH INSPECTION DUE AT:	MAXIMUM ALLOWED TOLERANCE	INSPECTION CARRIED OUT AT:	NEXT 1200-HOUR/ 24-MONTH INSPECTION DUE AT:
3400 Hours/ August 31, 2010	10% of 1200 hours = 120 hours or 10% of 24 months = 2.4 months	3400 Hours/October 15, 2010 (within 10% calendar tolerance)	4600 Hours/ October 31, 2012 (1)
4600 Hours/ October 31, 2012	10% of 1200 hours = 120 hours or 10% of 24 months = 2.4 months	4720 Hours/April 2, 2012 (10% hourly tolerance applied)	5920 Hours/ April 30, 2014 (1)

POST OFFICE BOX 482 • FORT WORTH, TEXAS 76101

Table 3. Hourly/Calendar Example (10% or up to a Maximum of 300 Hours Operating Time/6 Months Calendar Time, Whichever is Less): (continued)

1200-HOUR/ 24-MONTH INSPECTION DUE AT:	MAXIMUM ALLOWED TOLERANCE	INSPECTION CARRIED OUT AT:	NEXT 1200-HOUR/ 24-MONTH INSPECTION DUE AT:
5920 Hours/ April 30, 2014	10% of 1200 hours = 120 hours or 10% of 24 months = 2.4 months	6020 Hours/June 30, 2014 (within 10% hourly and calendar tolerance)	7220 Hours/ June 30, 2016 (1)

NOTE:

1 The last day of the month applies for the next inspection (407-A-05-00-00-00A-018A-A / 00016, calendar time).

POST OFFICE BOX 482 • FORT WORTH, TEXAS 76101

Scheduled Inspections - Description

WARNING

FAILURE TO CORRECT CONDITIONS SUCH AS, BUT NOT LIMITED TO, CORROSION, EROSION, MECHANICAL DAMAGE, OR OBVIOUS WEAR FOUND DURING A SCHEDULED INSPECTION COULD SERIOUSLY AFFECT THE AIRWORTHINESS OF THE HELICOPTER.

Scheduled inspections include the airframe and the component inspections. The scheduled airframe inspection intervals are related to the airframe operating time. The scheduled component inspection intervals are related to the component operating time.

1.1. Airframe Inspection Program

Bell Helicopter Textron has developed two airframe inspection programs that give you the flexibility to permit maximum helicopter use. They are the Airframe Periodic Inspection and the Airframe Progressive Inspection. You can choose one of the Bell programs or you can design your own program. You are responsible for the selection of an inspection program and for its approval by the governing civil aviation authority.

1.1.1. Airframe Progressive Inspection Program

If you choose the Airframe Progressive Inspection program, you may need to get approval from your local airworthiness authority. This inspection is divided into six separate events of similar workload. Refer to Table 1 and Figure 1.

Do an event of the Airframe Progressive Inspection (407-A-05-40-00-00A-281A-A / 00019) at intervals of 50 hours. After you complete Event Number 6, the cycle begins again with Event Number 1 (Table 1). You must do a minimum of one complete cycle (all six events) within a 12 calendar month period. If you do not complete all six events in a 12 calendar month period, the remaining events must be completed prior to operating the helicopter. The following scheduled inspections shall also be performed at their specified intervals:

- 300 hour inspection for optional equipment (407-A-05-40-00-08A-281A-A / 00026)
- 600 hour inspection (407-A-05-40-00-09A-281A-A / 00028)
- 600 hour or 12 month inspection (407-A-05-40-00-10A-281A-A / 00029) every 600 hours or 12 calendar months, whichever comes first
- 1 month inspection (407-A-05-40-00-10B-281A-A / 00030) every 1 month
- 12 month inspection (407-A-05-40-00-11A-281A-A / 00031) every 12 calendar months
- 24 month inspection (407-A-05-40-00-12A-281A-A / 00032) every 24 calendar months
- 1200 hour inspection (407-A-05-40-00-13A-281A-A / 00033)
- 1200 hour or 24 month inspection (407-A-05-40-00-14A-281A-A / 00034) every 1200 hours or 24 calendar months, whichever comes first
- 2500 hour inspection (407-A-05-40-00-15A-281A-A / 00035)

1.1.2. Airframe Periodic Inspection Program

Do an Airframe Periodic Inspection (407-A-05-40-00-06A-281A-A / 00025) every 12 calendar months or every 300 hours, whichever occurs first. You must do a minimum of one complete Airframe Periodic Inspection within a 12 month calendar period. The following scheduled inspections shall also be performed at their specified intervals:

- Deleted.
- 300 hour inspection for optional equipment (407-A-05-40-00-08A-281A-A / 00026)
- 600 hour inspection (407-A-05-40-00-09A-281A-A / 00028)
- 600 hour or 12 month inspection (407-A-05-40-00-10A-281A-A / 00029) every 600 hours or 12 calendar months, whichever comes first
- *1 month inspection (*407-A-05-40-00-10B-281A-A / 00030*) every 1 month*
- 12 month inspection (407-A-05-40-00-11A-281A-A / 00031) every 12 calendar months
- 24 month inspection (407-A-05-40-00-12A-281A-A / 00032) every 24 calendar months
- 1200 hour inspection (407-A-05-40-00-13A-281A-A / 00033)
- 1200 hour or 24 month inspection (407-A-05-40-00-14A-281A-A / 00034) every 1200 hours or 24 calendar months, whichever comes first
- 2500 hour inspection (407-A-05-40-00-15A-281A-A / 00035)

POST OFFICE BOX 482 • FORT WORTH, TEXAS 76101

1.2. Changing Inspection Program

You must use either the Airframe Periodic Inspection program or the Airframe Progressive Inspection program from the start. You can change between the two programs at any airframe operating time. To change from an Airframe Progressive Inspection program to an Airframe Periodic Inspection program (or to change your progressive inspection event sequences), do a complete 300 hour Airframe Periodic Inspection. To change from an Airframe Periodic Inspection program to an Airframe Progressive Inspection program, do a complete 300 hour Airframe Periodic Inspection.

The owner/operator is responsible for not exceeding the specific time interval of any scheduled airframe inspection procedure.

Table 1. Progressive Inspection Events

AIRFRAME HOURS	EVENT NUMBER	MAINTENANCE ZONES
50	1	1 and 2
100	2	3
150	3	4
200	4	5 and 6
250	5	7 and 8
300	6	9 and 10

POST OFFICE BOX 482 • FORT WORTH, TEXAS 76101

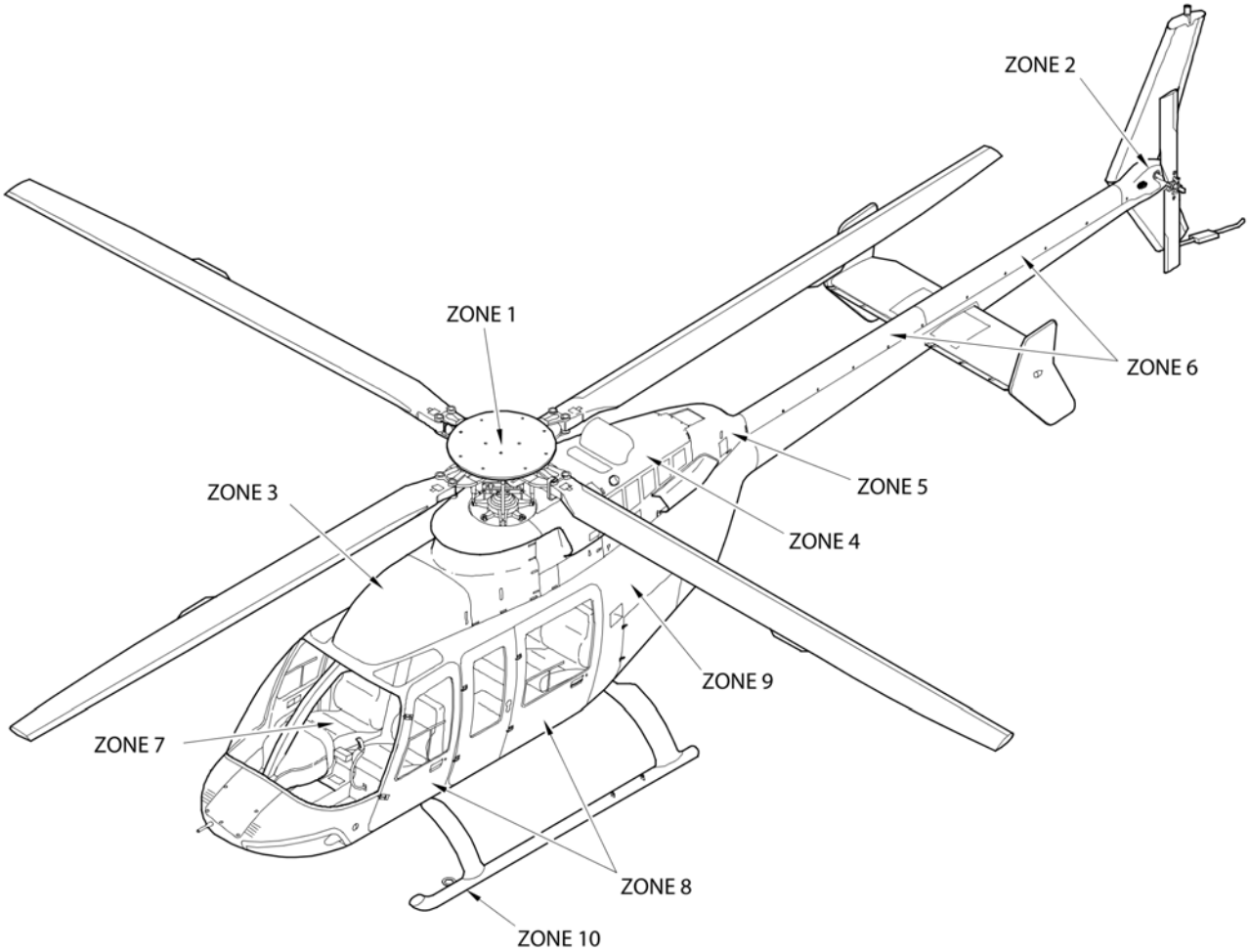

Zone 1 - Main rotor hub and blade assembly
Zone 2 - Tail rotor hub and blade assembly
Zone 3 - Forward top deck
Zone 4 - Power plant
Zone 5 - Aft top deck
Zone 6 - Tailboom
Zone 7 - Cabin interior
Zone 8 - Foward fuselage
Zone 9 - Aft fuselage
Zone 10 - Landing gear

ICN-407-A-050000-B-97499-00001-A-001-01

Figure 1. Maintenance Zones (Sheet 1 of 1)

POST OFFICE BOX 482 • FORT WORTH, TEXAS 76101

Intentionally blank page

POST OFFICE BOX 482 • FORT WORTH, TEXAS 76101

Scheduled Inspections - Progressive Inspection - Event 1

Procedure

Table 1. Progressive Inspection - Event #1

DATA REFERENCE	INSPECTION TASK DESCRIPTION	INITIAL	
		MECH	OTHER
	DATE: _____W.O. _____		
	FACILITY: _____		
	HELICOPTER S/N: _____		
	REGISTRY NO.: _____		
	TOTAL TIME:_____		
	SIGNATURE:_____		
	ZONE 1 - MAIN ROTOR SYSTEM		
	PLACARDS AND MARKINGS		
BHT-407-MM, Chapter 11	1. Examine the placards, decals, and markings. Make sure you can read them, they are applied correctly, and they are in agreement with the applicable configuration of your helicopter.		
	MAIN ROTOR SYSTEM		
	1. Examine the main rotor system for condition and security. Examine the components as follows:		
BHT-407-MM, Chapter 62	1.1. Inspect the main rotor hub assembly.		
BHT-407-MM, Chapter 62	1.2. Clean the main rotor blades.		
BHT-407-MM, Chapter 62	1.3. Inspect the main rotor blades.		
BHT-407-MM, Chapter 62	**NOTE** Frahm does not require removal for inspection.		
	1.4. Inspect the Frahm assembly (if installed).		
	ZONE 2 - TAIL ROTOR ASSEMBLY		
	PLACARDS AND MARKINGS		
BHT-407-MM, Chapter 11	1. Examine the placards, decals, and markings. Make sure you can read them, they are applied correctly, and they are in agreement with the applicable configuration of your helicopter.		
BHT-407-MM, Chapter 64	**TAIL ROTOR ASSEMBLY**		
	1. Do a torque check of the tail rotor assembly mast nut (560 to 580 inch-pounds (64 to 65 Nm)).		
	2. Examine the tail rotor assembly for general condition and security. Examine the components as follows:		
	2.1. Retainer nut and the lockwire for damage.		
	2.2. Support for damage.		
	2.3. Exposed portion of the yoke for damage.		
	2.4. Counterweights for damage.		
	2.5. Weights and their supports for damage.		
	2.6. Both blades of the tail rotor for damage.		
BHT-407-MM, Chapter 64	2.7. Inspect tail rotor blades for evidence of delamination/separation between skin plies and root end at trailing edge using a 10X magnifying glass. If cracks are found or suspected at any location on the tail rotor blade, or if excessive tail rotor vibrations are reported with no apparent causes, remove the tail rotor blade and do a leak check (BHT-407-MM, Chapter 64).		

POST OFFICE BOX 482 • FORT WORTH, TEXAS 76101

Table 1. Progressive Inspection - Event #1 (continued)

DATA REFERENCE	INSPECTION TASK DESCRIPTION	INITIAL	
		MECH	OTHER
	3. Examine the stop yield indicator for damage. If the stop yield indicator clearance is decreased, discard the stop yield indicator and proceed as follows:		
	3.1. Discard tail rotor yoke.		
	3.2. Inspect tail rotor blades for delamination.		
BHT-407-MM, Chapter 67	3.3. Inspect pitch links for condition.		
	3.4. Inspect pitch horns for condition.		
BHT-407-MM, Chapter 53	3.5. Inspect tailboom for condition in tail rotor blade tip path area.		
BHT-407-MM, Chapter 18	4. Dynamically balance the tail rotor hub and blade assembly.		
	DIRECTIONAL CONTROLS		
BHT-407-MM, Chapter 67	1. Do a torque check of the bolts (60 to 80 inch-pounds (6.7 to 9 Nm)) that attach the tail rotor pitch link assemblies to the tail rotor pitch horns.		
BHT-407-FM-X	**GROUND RUN**		
	1. Complete a ground run at 100% N_R to check for leaks and confirm system operation.		

POST OFFICE BOX 482 • FORT WORTH, TEXAS 76101

Scheduled Inspections - Progressive Inspection - Event 2

Procedure

Table 1. Progressive Inspection - Event #2

DATA REFERENCE	INSPECTION TASK DESCRIPTION	INITIAL MECH	INITIAL OTHER
	DATE: _____W.O. _____		
	FACILITY: _____		
	HELICOPTER S/N: _____		
	REGISTRY NO.: _____		
	TOTAL TIME:_____		
	SIGNATURE:_____		
	ZONE 3 - FORWARD TOP DECK		
	PLACARDS AND MARKINGS		
BHT-407-MM, Chapter 11	1. Examine the placards, decals, and markings. Make sure you can read them, they are applied correctly, and they are in agreement with the applicable configuration of your helicopter.		
	AIRFRAME		
BHT-407-MM, Chapter 53	1. Examine the forward and the transmission cowlings for condition.		
BHT-407-MM, Chapter 53	*2. Examine the upper inlet cowlings for condition.*		
BHT-407-MM, Chapter 53	3. Examine the engine air inlet cowling for condition. Examine the components as follows:		
BHT-407-MM, Chapter 71	3.1. Screen.		
BHT-407-MM, Chapter 71	3.2. Bellmouth.		
BHT-407-MM, Chapter 53	4. Examine the forward top deck for condition and security.		
	5. If installed, do an inspection of the wire strike protection system, upper and lower cutter assemblies for condition and security.		
	CONTROLS		
BHT-407-MM, Chapter 67 and BHT-407-MM, Chapter 67	1. Examine all of the control tubes, bellcranks, and the supports for condition, security, and correct operation. Examine the components as follows:		
	1.1. Signs of control interference.		
BHT-407-MM, Chapter 67	*1.2. Examine main rotor pitch links.*		
	1.3. Springs.		
	SWASHPLATE ASSEMBLY		
BHT-407-MM, Chapter 67	1. Examine the swashplate and support for condition and security. Examine the components as follows:		
BHT-407-MM, Chapter 63	1.1. Mast for cleanliness.		
BHT-407-MM, Chapter 67	*1.2. Turn the outer ring. Examine the duplex bearing for condition (do this check before you lubricate the duplex bearing).*		
	1.3. Seals for signs of too much grease leakage.		
	1.4. Pivot sleeve for wear and damage.		
	1.5. Do a swashplate friction adjustment.		
	1.6. Collective lever.		
BHT-407-MM, Chapter 67	1.7. Swashplate drive assembly.		
	HYDRAULIC		
	1. Examine the hydraulic system for condition, leaks and security. Examine the components as follows:		

POST OFFICE BOX 482 • FORT WORTH, TEXAS 76101

Table 1. Progressive Inspection - Event #2 (continued)

DATA REFERENCE	INSPECTION TASK DESCRIPTION	INITIAL MECH	INITIAL OTHER
BHT-407-MM, Chapter 29	1.1. Hydraulic actuators.		
BHT-407-MM, Chapter 29	1.2. Fluid flexible and rigid lines.		
	1.3. Filter differential pressure indicator button (two places).		
	1.4. Pivot bolts of the pilot valve on the actuators for freedom of rotation.		
BHT-407-MM, Chapter 29	1.5. Reservoir.		
	1.6. Pump.		
BHT-407-MM, Chapter 29	1.7. Remove the pump and inspect the input drive shaft/adapter as applicable.		
BHT-407-MM, Chapter 12	1.8. Lubricate the pump drive (as applicable to configuration).		
	TRANSMISSION AND PYLON ASSEMBLY		
BHT-407-MM, Chapter 63	1. Examine the pylon assembly for condition and security. Examine the components as follows:		
	1.1. Up-stops.		
	1.2. Pylon beams.		
	1.3. Corner mounts.		
BHT-407-MM, Chapter 63	1.4. Restraint spring assembly.		
BHT-407-MM, Chapter 63	1.5. Pylon stop transmission fitting.		
BHT-407-MM, Chapter 63	1.6. Pylon stop deck fitting.		
BHT-407-MM, Chapter 63	2. Examine the transmission assembly for damage, leaks, and security. Examine the components as follows:		
	2.1. Fluid flexible and rigid lines.		
BHT-407-MM, Chapter 96	2.2. Electrical harness.		
BHT-407-MM, Chapter 63	2.3. Impending bypass valve indicator.		
	2.4. Oil press system manifold.		
BHT-407-MM, Chapter 63	2.5. Filter manifold.		
BHT-407-MM, Chapter 63, BHT-407-MM, Chapter 63 and BHT-407-MM, Chapter 96	3. Examine the transmission lower and upper (mast bearing) chip detectors for metal particles. Examine the electrical circuit of the chip detectors for continuity.		
	GROUND RUN		
BHT-407-FM-X	*1. Do a ground run at 100% N_R to check for leaks and confirm system operation.*		

POST OFFICE BOX 482 • FORT WORTH, TEXAS 76101

Scheduled Inspections - Progressive Inspection - Event 3

Procedure

Table 1. Progressive Inspection - Event #3

DATA REFERENCE	INSPECTION TASK DESCRIPTION	INITIAL ME-CH	INITIAL OTH-ER
	DATE: _____W.O. _____		
	FACILITY: _____ _____		
	HELICOPTER S/N: _____		
	REGISTRY NO.: _____		
	TOTAL TIME:_____ _____		
	SIGNATURE:_____ _____		
	ZONE 4 - POWER PLANT		
	PLACARDS AND MARKINGS		
BHT-407-MM, Chapter 11	1. Examine the placards, decals, and markings. Make sure that you can read them, they are applied correctly, and they are in agreement with the applicable configuration of your helicopter.		
BHT-407-MM, Chapter 71	**ENGINE**		
BHT-407-MM, Chapter 53	1. Examine the engine cowling and the doors for condition and security.		
	2. Examine the engine for condition, leaks, and security. Examine the components as follows:		
	2.1. Fluid flexible and rigid lines.		
BHT-407-MM, Chapter 96	2.2. Electrical harness.		
BHT-407-MM, Chapter 71	2.3. Engine mounts, fittings, and legs.		
	2.4. Exhaust stack.		
BHT-407-MM, Chapter 53 and BHT-407-MM, Chapter 53	3. Examine the firewalls for condition and security.		
	4. Examine the engine pan drains. Make sure that they are not clogged. Restore broken or missing sealant from engine pan.		
BHT-407-MM, Chapter 76	5. Examine the engine controls for condition, correct operation, and security. Examine the components as follows:		
	NOTE *Accomplish throttle/Fly detent rigging check. Refer to* BHT-407-MM, Chapter 76 *or* BHT-407-MM, Chapter 76*, or* BHT-407-MM, Chapter 76 *"Throttle/Fly Detent Rigging Procedure" for acceptable limits.*		
	D E L E T E D		
	5.2. Linkage for any looseness.		

POST OFFICE BOX 482 • FORT WORTH, TEXAS 76101

Table 1. Progressive Inspection - Event #3 (continued)

DATA REFERENCE	INSPECTION TASK DESCRIPTION	INITIAL	
		ME-CH	OTH-ER
BHT-407-MM, Chapter 63	**ENGINE TO TRANSMISSION DRIVESHAFT**		
	1. Examine the engine to transmission driveshaft for condition and security. Examine the components as follows:		
	1.1. Driveshaft for corrosion, surface damage and cracked spring.		
	1.2. Flexframe and bolts for condition and signs of slippage.		
BHT-407-MM, Chapter 65	**TAIL ROTOR FORWARD SHORT SHAFT ASSEMBLY**		
	1. Examine the short shaft for condition and security.		
	2. Examine the disc pack couplings.		
	3. Do a torque check of the disc pack coupling attachment hardware (150 to 180 inch-pounds (17 to 20 Nm)).		
	4. Examine the flywheel for condition and security (if installed).		
	FREEWHEEL ASSEMBLY		
BHT-407-MM, Chapter 63	1. Examine the freewheel assembly for condition, leaks, and security.		
BHT-407-MM, Chapter 63 and BHT-407-MM, Chapter 96 or BHT-407-MM, Chapter 96 or BHT-407-MM, Chapter 96	2. Examine the freewheel chip detector for metal particles. Examine the electrical circuit of the chip detectors for continuity.		
	ROTOR BRAKE DISC		
BHT-407-MM, Chapter 63	1. Examine the rotor brake disc for condition and security.		
	STARTER-GENERATOR (206-062-200)		
BHT-407-MM, Chapter 71 BHT-407-MM, Chapter 96 BHT-407-MM, Chapter 96	1. Remove and examine the starter-generator for condition. Examine the components as follows: - Brushes - Commutator - Drive spline		
	2. Examine the duct and the clamp for condition and security.		
	GROUND RUN		
Deleted	Deleted.		
BHT-407-FM-X	2. Complete a ground run at 100% N_R to check for leaks and confirm system operation.		

POST OFFICE BOX 482 • FORT WORTH, TEXAS 76101

Scheduled Inspections - Progressive Inspection - Event 4

Procedure

Table 1. Progressive Inspection - Event #4

DATA REFERENCE	INSPECTION TASK DESCRIPTION	INITIAL MECH	INITIAL OTHER
	DATE: _____W.O. _____		
	FACILITY: _____		
	HELICOPTER S/N: _____		
	REGISTRY NO.: _____		
	TOTAL TIME:_____		
	SIGNATURE:_____		
	ZONE 5 - AFT TOP DECK		
	PLACARDS AND MARKINGS		
BHT-407-MM, Chapter 11	1. Examine the placards, decals, and markings. Make sure that you can read them, they are applied correctly, and they are in agreement with the applicable configuration of your helicopter.		
	AIRFRAME		
BHT-407-MM, Chapter 53	1. Examine the aft fairing for condition.		
	2. Examine the aft top deck for condition, leaks and security.		
	OIL SYSTEM		
	1. Examine the engine/transmission oil cooling system for condition, leaks, and security.		
	2. Examine the components as follows:		
BHT-407-MM, Chapter 63	2.1. Fluid flexible and rigid lines.		
BHT-407-MM, Chapter 96	2.2. Electrical harness.		
BHT-407-MM, Chapter 79	2.3. Oil tank and cooler.		
BHT-407-MM, Chapter 79			
BHT-407-MM, Chapter 65	2.4. Oil cooler blower assembly.		
	AFT SHORT SHAFT ASSEMBLY		
BHT-407-MM, Chapter 65	1. Examine the short shaft for condition and security.		
	1.1. Loose and working rivets.		
	2. Examine the disc pack couplings for condition.		
	3. Do a torque check of the disc pack coupling attachment hardware (150 to 180 inch-pounds (17 to 20 Nm)).		
	ZONE 6 - TAILBOOM		
BHT-407-MM, Chapter 11	**PLACARDS AND MARKINGS**		
	1. Examine the placards, decals, and markings. Make sure that you can read them, they are applied correctly, and they are in agreement with the applicable configuration of your helicopter.		
BHT-407-MM, Chapter 53	**TAILBOOM STRUCTURE**		
	1. Examine the tail rotor driveshaft cover and the gearbox cowling for condition and security.		

POST OFFICE BOX 482 • FORT WORTH, TEXAS 76101

Table 1. Progressive Inspection - Event #4 (continued)

DATA REFERENCE	INSPECTION TASK DESCRIPTION	INITIAL MECH	INITIAL OTHER
	CAUTION **ANY CRACK, CORROSION, OR LOOSE OR SHEARED RIVET IS CAUSE FOR IMMEDIATE GROUNDING OF THE HELICOPTER UNTIL THE PROBLEM IS CORRECTED.**		
	2. Examine the tailboom assembly for condition and security. Examine the components as follows:		
	2.1. Tailboom skins for chafing damage or cracks from the tail rotor driveshaft covers and the tail rotor gearbox covers.		
	2.2. Tailboom skins at the horizontal stabilizer for cracks, loose rivets and fasteners.		
	2.3. Hanger bearing supports for cracks and security.		
	2.4. Horizontal stabilizer and the attachment supports for cracks and security.		
	2.5. Auxiliary fins for condition and security.		
	2.6. Slat assemblies for condition and security.		
	2.7. Vertical fin for condition and security.		
	2.8. Tail rotor gearbox support where it attaches to tailboom and at the attachment of the tail rotor gearbox.		
	TAIL ROTOR DRIVESHAFT		
	1. Examine the tail rotor driveshaft for condition and security. Examine the components as follows:		
BHT-407-MM, Chapter 65	1.1. All bearings and hangers.		
BHT-407-MM, Chapter 65	1.2. Disc pack couplings.		
	1.3. Do a torque check of the disc pack coupling attachment hardware (150 to 180 inch-pounds (17 to 20Nm)).		
	1.4. Driveshaft tube assemblies.		
BHT-407-MM, Chapter 65	2. Examine the driveshaft segment assemblies for any noticeable rotational or axial (fore and aft) play between the adapter and the tail rotor driveshaft, at all four locations.		
BHT-407-MM, Chapter 65 BHT-407-MM, Chapter 65 BHT-407-MM, Chapter 65	2.1. If rotational or axial play is found, remove the driveshaft, remove the nut, washer, and the adapter to inspect the splines of the adapter and shaft from the applicable driveshaft assembly and examine the associated parts for allowable damage limits.		
BHT-407-MM, Chapter 65	**TAIL ROTOR GEARBOX**		
	1. Do a torque check of the tail rotor gearbox attachment nuts (140 to 160 inch-pounds (16 to 18 Nm)).		
	2. Examine the tail rotor gearbox for condition, leaks, and security.		
	3. Examine the chip detector of the tail rotor gearbox for metal particles.		
BHT-407-MM, Chapter 96	4. Examine the electrical circuit of the chip detector for continuity.		
BHT-407-CRO, Chapter 65, Figure 65-24, Component Repair and Overhaul Manual	5. Examine tail rotor gearbox output shaft at crosshead seal sliding area for wear and corrosion.		

POST OFFICE BOX 482 • FORT WORTH, TEXAS 76101

Table 1. Progressive Inspection - Event #4 (continued)

DATA REFERENCE	INSPECTION TASK DESCRIPTION	INITIAL	
		MECH	OTHER
BHT-407-MM, Chapter 67	**PITCH CHANGE CONTROL**		
	1. Examine the tail rotor pitch control mechanism for condition and security. Examine the components as follows:		
	1.1. Boot.		
	1.2. Pitch links.		
	1.3. Crosshead sliding seal.		
	ELECTRICAL		
BHT-407-MM, Chapter 96	1. Examine all visible electrical components, wires, cables, and connectors in the area of the tailboom for chafing, and general condition and security.		
BHT-407-MM, Chapter 96	2. Verify navigation lights and anti-collision light for operation, condition, and security.		
BHT-407-MM, Chapter 96			
BHT-407-MM, Chapter 97	3. Examine antennas for condition and security.		
	GROUND RUN		
BHT-407-FM-X	1. Complete a ground run at 100% N_R to check for leaks and confirm system operation.		

POST OFFICE BOX 482 • FORT WORTH, TEXAS 76101

Intentionally blank page

POST OFFICE BOX 482 • FORT WORTH, TEXAS 76101

Scheduled Inspections - Progressive Inspection - Event 5

Procedure

Table 1. Progressive Inspection - Event #5

DATA REFERENCE	INSPECTION TASK DESCRIPTION	INITIAL MECH	INITIAL OTHER
	DATE: _____W.O. _____		
	FACILITY: _____		
	HELICOPTER S/N: _____		
	REGISTRY NO.: _____		
	TOTAL TIME:_____		
	SIGNATURE:_____		
	ZONE 7 - CABIN INTERIOR (CREW AND PASSENGER COMPARTMENTS)		
	PLACARDS AND MARKINGS		
BHT-407-MM, Chapter 11	1. Examine the placards, decals, and markings. Make sure that you can read them, they are applied correctly, and they are in agreement with the applicable configuration of your helicopter.		
BHT-407-FM-X	**INSTRUMENTS**		
	1. Examine instruments for condition and safety. Examine for correct markings.		
	EQUIPMENT AND FURNISHING		
BHT-407-MM, Chapter 53	1. Examine the cabin floor for condition.		
BHT-407-MM, Chapter 25	2. Examine the seat cushions, seat backs, and interior trim for condition and safety.		
	3. Examine the restraints for condition, safety, and correct operation.		
	4. Examine the ventilation system for condition and safety.		
	5. Make sure that the fuel valve switch guard operates correctly.		
	6. Examine first aid kit contents for condition and for safety of installation.		
BHT-407-MM, Chapter 26	7. Examine fire extinguisher and quick-release for condition and safety.		
BHT-407-MM, Chapter 95 or BHT-407-MM, Chapter 95 or BHT-407-MM, Chapter 95	8. Examine the heating system of the pitot and static ports for correct operation.		
	SN: 53000-54299: 9. Make sure that the FADEC Fault Code - Maintenance Mode system operates correctly.		
BHT-407-MM, Chapter 95	SN: 54300-Subsequent: 10. Make sure that the Bell Maintenance Pages can be accessed.		
	CONTROLS		
BHT-407-MM, Chapter 67, BHT-407-MM, Chapter 67 and BHT-407-MM, Chapter 67	1. Examine the cyclic and the collective control sticks and pedals for condition and safety. Examine the directional control pedal for correct operation.		
	2. Examine components of airspeed-actuated pedal stop for condition, safety, and correct operation. Examine components that follow:		
	2.1. Solenoid		
	2.2. Cam		

POST OFFICE BOX 482 • FORT WORTH, TEXAS 76101

Table 1. Progressive Inspection - Event #5 (continued)

DATA REFERENCE	INSPECTION TASK DESCRIPTION	INITIAL MECH	INITIAL OTHER
	2.3. Release cable		
	3. Make sure that there is a minimum of friction on the components that follow:		
BHT-407-MM, Chapter 67	3.1. Cyclic		
BHT-407-MM, Chapter 67	3.2. Collective		
BHT-407-MM, Chapter 67	3.3. Directional control		
	ELECTRICAL		
BHT-407-MM, Chapter 96	1. Do an operational check of airspeed-actuated pedal stop system.		
	ZONE 8 - FORWARD FUSELAGE		
	PLACARDS AND MARKINGS		
BHT-407-MM, Chapter 11	1. Examine the placards, decals, and markings. Make sure that you can read them, they are applied correctly, and they agree with the applicable configuration of your helicopter.		
	FORWARD FUSELAGE		
BHT-407-MM, Chapter 53 and BHT-407-MM, Chapter 53	1. Examine the forward fuselage for condition and safety. Examine the components as follows:		
BHT-407-MM, Chapter 52 and BHT-407-MM, Chapter 52 and BHT-407-MM, Chapter 52	1.1. Doors, door hinges and latches.		
	1.2. Do litter door caution light operational check		
	1.3. Battery door.		
	1.4. Any fluid leaks.		
	1.5. Windows.		
BHT-407-MM, Chapter 53	1.6. Side body fairings.		
	1.7. Upper fairings and cowlings		
	1.8. Upper roof deck		
	1.9. Upper structure of the vertical tunnel attached to the main roof beam assembly.		
	1.10. Lower forward shell		
	1.11. Structure of roof beam including the inboard upper radius of pylon and stop supports.		
	2. Service the battery as follows:		
BHT-407-MM, Chapter 96	2.1. Remove the battery.		
BHT-407-CR&O-V Chapter 96	2.2. Recondition the battery per BHT-ELEC-SPM, Electrical Standard Practices Manual and/or manufacturer's service manual.		
	2.3. Examine the vent lines for obstructions or damage.		
	2.4. Clean the battery mounting area prior to installing a serviceable battery.		
	2.5. Examine the battery compartment for condition and safety.		
BHT-407-MM, Chapter 96	2.6. Install the serviceable battery.		
BHT-407-MM, Chapter 96	**NOTE** The following step is applicable to Ni-Cad batteries only.		
	3. Do a functional check of the battery hot annunciator circuit.		

POST OFFICE BOX 482 • FORT WORTH, TEXAS 76101

Table 1. Progressive Inspection - Event #5 (continued)

DATA REFERENCE	INSPECTION TASK DESCRIPTION	INITIAL	
		MECH	OTH-ER
	4. Examine the External Power Receptacle for condition and safety.		
BHT-407-MM, Chapter 95	5. Examine the pitot and the static ports for condition and safety. Examine the components as follows:		
	5.1. Pitot tube for discoloration and visible obstruction.		
	5.2. Drain moisture from the pitot and the static piping installation.		
BHT-407-MM, Chapter 97	6. Examine the antenna(s) for condition and safety. Restore broken or missing sealant at antenna base as required.		
	GROUND RUN		
BHT-407-FM-X	1. Do a ground run at 100% N_R to check for leaks and confirm system operation.		

POST OFFICE BOX 482 • FORT WORTH, TEXAS 76101

Intentionally blank page

POST OFFICE BOX 482 • FORT WORTH, TEXAS 76101

Scheduled Inspections - Progressive Inspection - Event 6

Procedure

Table 1. Progressive Inspection - Event #6

DATA REFERENCE	INSPECTION TASK DESCRIPTION	INITIAL MECH	INITIAL OTHER
	DATE: _____W.O. _____		
	FACILITY: _____		
	HELICOPTER S/N: _____		
	REGISTRY NO.: _____		
	TOTAL TIME:_____		
	SIGNATURE:_____		
	ZONE 9 - AFT FUSELAGE		
	PLACARDS AND MARKINGS		
BHT-407-MM, Chapter 11	1. Examine the placards, decals, and markings. Make sure you can read them, they are applied correctly, and they agree with the applicable configuration of your helicopter.		
	AIRFRAME		
BHT-407-MM, Chapter 53	**CAUTION** **ANY CRACK, CORROSION, OR LOOSE OR SHEARED RIVET IS CAUSE FOR IMMEDIATE GROUNDING OF THE HELICOPTER UNTIL THE PROBLEM IS CORRECTED.**		
	1. Examine the aft fuselage structure for condition and security. Examine the components as follows:		
BHT-407-MM, Chapter 53	1.1. Engine upper cowling and doors.		
BHT-407-MM, Chapter 53	1.2. Upper longeron.		
BHT-407-MM, Chapter 71	1.3. All engine mounts and sway bar to airframe attachment points.		
	1.4. Mid fuselage lower longerons.		
	1.5. Floor of the baggage compartment.		
	1.6. Walls of the baggage compartment.		
BHT-407-MM, Chapter 52	1.7. Baggage compartment door.		
	1.8. Aft lower fairing.		
	1.9. Oil cooler fairing.		
	1.10. Oil cooler deck.		
	1.11. Aft fuselage skins.		
	1.12. Aft lower shell.		
	2. Examine the interior of the structure for condition.		
BHT-407-MM, Chapter 53	2.1. Examine the condition of the rivets that attach the composite skins to the structure.		
BHT-407-MM, Chapter 53	3. Do a torque check of the tailboom to the aft fuselage attachment nuts.		

POST OFFICE BOX 482 • FORT WORTH, TEXAS 76101

Table 1. Progressive Inspection - Event #6 (continued)

DATA REFERENCE	INSPECTION TASK DESCRIPTION	INITIAL MECH	INITIAL OTHER
BHT-407-MM, Chapter 53	**NOTE** If the existing sealant application meets the intent of the Aft Fuselage Attachment Fittings - Sealant Removal and Application procedure specified in BHT-407-MM, Chapter 53, sealant removal is not required. 4. If required for inspection purposes, it is recommended to remove the sealant around the fasteners of the aft fuselage attachment fittings.		
BHT-407-MM, Chapter 53	5. Examine the tailboom attachment fittings on the fuselage and on the tailboom, for condition and security. Pay particular attention to the upper left-hand fitting.		
BHT-407-MM, Chapter 53	6. If removed from inspection, apply sealant to the fasteners of the aft fuselage attachment fittings.		
BHT-407-MM, Chapter 96	7. Examine the electrical components, the mounts, and the electrical harness for condition and security.		
	8. Examine the transmission oil lines and other drain lines for condition and security.		
BHT-407-MM, Chapter 67	9. Examine the tail rotor control system for condition, security, and correct operation.		
BHT-407-MM, Chapter 97	10. Examine the antenna(s) for condition and security. Restore broken or missing sealant at antenna base as required.		
BHT-407-MM, Chapter 96	11. Do an operational check of the baggage door annunciator circuit.		
BHT-407-MM, Chapter 29	**HYDRAULIC**		
	1. Examine the tail rotor hydraulic system for condition, leaks, and security. Examine the components as follows:		
	1.1. Pivot bolts of the pilot valve on the actuators for freedom of rotation.		
	1.2. Actuator support.		
	ZONE 10 - LANDING GEAR		
	PLACARDS AND MARKINGS		
BHT-407-MM, Chapter 11	1. Examine the placards, decals, and markings. Make sure you can read them, they are applied correctly, and they agree with the applicable configuration of your helicopter.		
	LANDING GEAR		
BHT-407-MM, Chapter 32	1. Examine the landing gear assembly for condition and security. Examine the components as follows:		
	1.1. Skid tubes.		
	1.2. Skid saddles.		
	1.3. Skid shoes.		
	1.4. Retaining strap and rubber cushions.		
	1.5. Rocking beam.		
	1.6. Crosstubes.		
	1.7. Attachment fittings.		
BHT-407-MM, Chapter 12	**LUBRICATION**		
	1. Service and lubricate the helicopter as necessary.		
	Deleted		

POST OFFICE BOX 482 • FORT WORTH, TEXAS 76101

Table 1. Progressive Inspection - Event #6 (continued)

DATA REFERENCE	INSPECTION TASK DESCRIPTION	INITIAL	
		MECH	OTHER
Deleted	*Deleted.*		
CSSD-PSE-87-001, Corrosion Control Guide	**CORROSION CONTROL**		
	1. Perform corrosion inspection in accordance with the Corrosion Control Guide.		
	GROUND RUN		
Deleted	*Deleted.*		
BHT-407-FM-X	2. Complete ground run at 100% N_R to check for leaks and confirm system operation.		

POST OFFICE BOX 482 • FORT WORTH, TEXAS 76101

Intentionally blank page

POST OFFICE BOX 482 • FORT WORTH, TEXAS 76101

Scheduled Inspections - Airframe Periodic Inspection Procedure

Table 1. Airframe Periodic Inspection

INSPECTION TASK DESCRIPTION	DATA REFERENCE INITIAL MECH OTHER

DATE: _____W.O. _____

FACILITY: _____

HELICOPTER S/N: _____

REGISTRY NO.: _____

TOTAL TIME:_____

SIGNATURE:_____

407-A-05-40-00-00A-281A-A / 00019,

407-A-05-40-00-01A-281A-A / 00020,

407-A-05-40-00-02A-281A-A / 00021,

407-A-05-40-00-03A-281A-A / 00022,

407-A-05-40-00-04A-281A-A / 00023 and

407-A-05-40-00-05A-281A-A / 00024

1. Do this inspection every 12 calendar months or every 300 hours of operation.
2. Do all six events of the airframe progressive inspection.

POST OFFICE BOX 482 • FORT WORTH, TEXAS 76101

Intentionally blank page

POST OFFICE BOX 482 • FORT WORTH, TEXAS 76101

Scheduled Inspections - 300 Hour Inspection for Optional Equipment

Procedure

Table 1. 300 Hour Inspection for Optional Equipment

DATA REFERENCE	INSPECTION TASK DESCRIPTION	INITIAL MECH	INITIAL OTHER
	DATE: _____W.O. _____		
	FACILITY: _____		
	HELICOPTER S/N: _____		
	REGISTRY NO.: _____		
	TOTAL TIME:_____		
	SIGNATURE:_____		
	NOTE Complete the following if applicable.		
	PARTICLE SEPARATOR		
BHT-407-MM, Chapter 71	1. Examine the particle separator for condition and security.		
	ROTOR BRAKE		
BHT-407-MM, Chapter 63	1. Examine the rotor brake assembly for condition and security.		
	DUAL CONTROL		
BHT-407-II-09	1. Examine the dual controls for condition and security.		
	SNOW DEFLECTOR		
BHT-407-MM, Chapter 71	1. Examine the snow deflector baffles for condition and security.		
	CROSSTUBE FAIRING		
BHT-407-MM, Chapter 32	1. Examine the crosstube fairings for condition and security.		
	D E L E T E D		
D E L E T E D	*D E L E T E D*		

POST OFFICE BOX 482 • FORT WORTH, TEXAS 76101

Intentionally blank page

POST OFFICE BOX 482 • FORT WORTH, TEXAS 76101

Scheduled Inspections - 300 Hour or 12 Month Inspection

Procedure

Table 1. 300 Hour or 12 Month Inspection

DATA REFERENCE	INSPECTION TASK DESCRIPTION	INITIAL	
		MECH	OTHER
	DATE: _____W.O. _____ FACILITY: _____ HELICOPTER S/N: _____ REGISTRY NO.: _____ TOTAL TIME:_____ SIGNATURE:_____ **NOTE** Accomplish each 300 hours of flight time or 12 calendar months, whichever occurs first. **FUEL SYSTEM**		
BHT-407-MM, Chapter 99	1. Examine the auxiliary fuel tank installation for condition and security.		

POST OFFICE BOX 482 • FORT WORTH, TEXAS 76101

Intentionally blank page

POST OFFICE BOX 482 • FORT WORTH, TEXAS 76101

Scheduled Inspections - 600 Hour Inspection Procedure

Table 1. 600 Hour Inspection

DATA REFERENCE	INSPECTION TASK DESCRIPTION	INITIAL MECH	INITIAL OTHER
	DATE: _____W.O. _____ FACILITY: _____ HELICOPTER S/N: _____ REGISTRY NO.: _____ TOTAL TIME:_____ SIGNATURE:_____		
BHT-407-CR&O-V	**ROTOR BRAKE** **NOTE** Inspection information for the caliper assemblies and disc is contained in Northwest Dynamics Document No. B0223-OM, B0223-OM4, or B0244-OM as identified in Table 2. 1. Inspect the rotor brake, if installed.		
BHT-407-MM, Chapter 62	**MAIN ROTOR FRAHM** **NOTE** The following steps are not required if the Frahm has been removed in accordance with TB 407-03-51. 1. Remove main rotor Frahm.		
BHT-407-MM, Chapter 62	2. Inspect Frahm assembly for condition.		

Table 2. Rotor Brake Component Versus Inspection Document Table

NOMENCLATURE/ PART NUMBER	RELATED KIT 407-II-8	INSPECTION INTERVAL	NORTHWEST DYNAMICS INSPECTION DOCUMENT
CALIPER ASSEMBLY			
	SN: 53000-53442 Drive Train Modification Kit: Not Installed:		
206-340-301-103	206-706-502-103	600 Hours	B0223-OM
	SN: 53443-53631:		
407-340-302-101	206-706-502-105 206-706-502-107	600 Hours	B0223-OM
	SN: 53000-53442 Drive Train Modification Kit: Installed:		
407-340-302-101FM	Kit not applicable - Field Mod per 407-II-30 (upgrade of 206-340-301-103	600 Hours	B0223-OM
	SN: 53632-54140 or 54300-54380:		
407-340-302-103	206-706-502-109	600 Hours	B0223-OM4
	SN: 53000-53631 TB 407-05-63: Post TB 407-05-67: Post:		
407-540-304-101FM	Kit not applicable - Field Mod per TB 407-05-67 (upgrade of 407-340-302-101 and -101FM)	600 Hours	B0223-OM4

POST OFFICE BOX 482 • FORT WORTH, TEXAS 76101

Table 2. Rotor Brake Component Versus Inspection Document Table (continued)

NOMENCLATURE/ PART NUMBER	RELATED KIT 407-II-8	INSPECTION INTERVAL	NORTHWEST DYNAMICS INSPECTION DOCUMENT
SN: 54141-54299 or 54381-Subsequent or (SN: 53000-53442 Drive Train Modification Kit: Installed TB 407-05-67: Post):			
427-340-352-113	206-706-502-115	1200 Hours	B0244-OM
DISC			
SN: 53000-53442 Drive Train Modification Kit: Not Installed:			
206-340-301-101 (thin)	206-706-502-103	600 Hours	B0223-OM
(SN: 53000-53442 Drive Train Modification Kit: Installed) or SN: 53443-Subsequent:			
407-340-318-101 (thick)	Kit not applicable - Field Mod per 407-II-30 and basic production 53443 and subsequent	1200 Hours	B0223-OM4 or B0244-OM

POST OFFICE BOX 482 • FORT WORTH, TEXAS 76101

Scheduled Inspections - 600 Hour or 12 Month Inspection

Preliminary requirements

Consumables, materials and expendables

Nomenclature	Identification No.	Qty	Remarks
Drycleaning solvent	C-304	AR	
Aliphatic naphtha	C-305	AR	
Cleaning compound	C-318	AR	
Clean cloth	C-516	AR	

Procedure

Table 1. 600 Hour or 12 Month Inspection

DATA REFERENCE	INSPECTION TASK DESCRIPTION	INITIAL MECH	INITIAL OTHER
	DATE: _____W.O. _____		
	FACILITY: _____		
	HELICOPTER S/N: _____		
	REGISTRY NO.: _____		
	TOTAL TIME:_____		
	SIGNATURE:_____		
	CAUTION **FOR HELICOPTERS OPERATED IN CORROSIVE ENVIRONMENT OR EXTREME ENVIRONMENTAL CONDITIONS, THE RECOMMENDED INTERVAL FOR INSPECTION AND LUBRICATION MUST BE REDUCED TO 600 HOURS OR 6 MONTHS.**		
BHT-407-MM, Chapter 62	**MAIN ROTOR HUB AND BLADE**		
BHT-407-MM, Chapter 62	1. Remove main rotor blades from the main rotor hub assembly.		
	2. Remove oil and grease from the main rotor hub, blades, and blade bolts with clean cloth (C-516) dampened with aliphatic naphtha (C-305) or drycleaning solvent (C-304).		
	3. Clean main rotor hub and blades with cleaning compound (C-318). Thoroughly rinse with fresh water and dry with clean cloths.		
	4. Examine main rotor hub and blades for evidence of corrosion. Pay particular attention to the surface around the blade bolt bushings installed in the grip tangs.		
BHT-407-MM, Chapter 62	5. If installed, examine the expandable blade bolts for condition and security.		
BHT-407-MM, Chapter 12	6. If installed, lubricate the expandable blade bolts.		
BHT-407-MM, Chapter 62	7. Install main rotor blades onto the main rotor hub assembly.		
	AUTOMATIC FLIGHT CONTROL SYSTEM (AFCS) 407-706-061/407-706-067		
	NOTE The following steps are only applicable to the 407GX/407GXi with the AFCS installed.		
	1. Visually examine the following for condition and security:		
BHT-407-MM, Chapter 67	1.1. Longitudinal SCAS actuator assembly.		

POST OFFICE BOX 482 • FORT WORTH, TEXAS 76101

Table 1. 600 Hour or 12 Month Inspection (continued)

DATA REFERENCE	INSPECTION TASK DESCRIPTION	INITIAL	
		MECH	OTHER
BHT-407-MM, Chapter 67	1.2. Lateral SCAS actuator assembly.		
BHT-407-MM, Chapter 22	1.3. Flight Control Computer (FCC) .		
BHT-407-MM, Chapter 22	1.4. Mode Select Panel (MSP) .		
	2. Do a functional check of the AFCS.		
BHT-407-MM, Chapter 22	*2.1. AFCS (2-Axis) (407-706-061).*		
BHT-407-MM, Chapter 22	*2.2. AFCS (3-Axis).*		
	SEALED LEAD ACID (SLA) BATTERY		
BHT-407-CR&O-V, Chapter 96	1. Service the battery as follows:		
BHT-407-MM, Chapter 96	1.1. Remove the battery.		
	1.2. Perform capacity check according to the manufacturer's component maintenance manual.		
BHT-407-MM, Chapter 96	1.3. Inspect the vent lines for obstructions or damage.		
BHT-407-MM, Chapter 96	1.4. Clean the battery mounting area prior to installing a serviceable battery.		
	1.5. Examine the battery compartment for condition and security.		
BHT-407-MM, Chapter 96	1.6. Install the serviceable battery.		

POST OFFICE BOX 482 • FORT WORTH, TEXAS 76101

Scheduled inspection - 1 Month Inspection

Procedure

Table 1. 1 Month Inspection

DATA REFERENCE	INSPECTION TASK DESCRIPTION	INITIAL	
		MECH	OTHER
	DATE: _____W.O. _____ FACILITY: _____ HELICOPTER S/N: _____ REGISTRY NO.: _____ TOTAL TIME:_____ SIGNATURE:_____ **FIRE PROTECTION**		
BHT-407-MM, Chapter 26	1. Do a general visual inspection of the fire extinguisher kit (If installed).		

POST OFFICE BOX 482 • FORT WORTH, TEXAS 76101

Intentionally blank page

POST OFFICE BOX 482 • FORT WORTH, TEXAS 76101

Scheduled Inspections - 12 Month Inspection

Preliminary requirements

Consumables, materials and expendables

Nomenclature	Identification No.	Qty	Remarks
Shear wire	C-554	AR	

Procedure

Table 1. 12 Month Inspection

DATA REFERENCE	INSPECTION TASK DESCRIPTION	INITIAL MECH	INITIAL OTHER
	DATE: _____W.O. _____		
	FACILITY: _____		
	HELICOPTER S/N: _____		
	REGISTRY NO.: _____		
	TOTAL TIME:_____		
	SIGNATURE:_____		
	GENERAL		
	1. Make sure that an airframe interval inspection (407-A-05-00-00-00A-281A-A / 00018) or one full cycle (all six events) of the inspection (407-A-05-00-00-00A-281A-A / 00018) shows completed in the last 12 calendar month period.		
	2. Examine all fuel system, oil system, and hydraulic system filler caps for correct function and seal. Make sure that the O-rings in the filler caps are in a good condition. Repair or replace the filler caps or replace O-rings if necessary.		
BHT-407-MM, Chapter 18 and BHT-407-MM, Chapter 18	3. Do a dynamic balance of the main rotor hub and blade assembly.		
BHT-407-MM, Chapter 25 BHT-407-MM, Chapter 53	*4. Remove the interior trim and access panels necessary to get access. Examine the steps that follow:*		
	SERVO ACTUATORS		
BHT-407-MM, Chapter 29	: Servo actuator P/N 206-076-062-105/-107: 1. Do the Servo Actuators - 12 Month Inspection.		
	FORWARD FUSELAGE		
BHT-407-MM, Chapter 67	*1. Examine the controls for their condition, safety and correct operation. Examine them in the locations that follow:*		
	1.1. Pedestal.		
	1.2. Crew seats.		
	1.3. Tunnel.		
	1.4. Roof beam.		
	1.5. Hat bin.		
	2. Examine the components of the airspeed-actuated pedal stop for their condition, safety and correct operation. Examine the components that follow:		
BHT-407-MM, Chapter 67	2.1. Solenoid.		
BHT-407-MM, Chapter 67	2.2. Cam.		
BHT-407-MM, Chapter 67	*2.3. Release the cable.*		

POST OFFICE BOX 482 • FORT WORTH, TEXAS 76101

Table 1. 12 Month Inspection (continued)

DATA REFERENCE	INSPECTION TASK DESCRIPTION	INITIAL MECH	INITIAL OTHER
	3. Operate the airspeed-actuated pedal stop manual cable release mechanism for the cam. Examine for the correct operation and free movement of the cable. Safety the cable release handle with shear wire (C-554).		
BHT-407-MM, Chapter 96	SN: 53000-54299: 4. Do a pedal restrictor control system functional test.		
BHT-407-MM, Chapter 96	SN: 54300-Subsequent: 5. Do a pedal restrictor control system functional test.		
BHT-407-MM, Chapter 29	*6. Examine all fluid flexible and rigid lines for their condition, leaks, and safety. Examine them in the locations that follow:*		
	6.1. Vertical tunnel.		
	6.2. Roof beam.		
	6.3. Hat bin.		
BHT-407-MM, Chapter 76	*7. Examine the throttle control cable for its condition and safety. Examine it in the locations that follow:*		
	7.1. Crew seats.		
	7.2. Vertical tunnel.		
	7.3. Roof beam.		
BHT-407-MM, Chapter 95	SN: 53000-54299: *8. Replace the 1.5 volt dry cell battery at the rear of the instrument panel digital clock.*		
BHT-407-MM, Chapter 53	**CAUTION** ***ALL CRACKS, CORROSION, OR LOOSE OR CUT RIVET IS A CAUSE FOR THE HELICOPTER TO BE GROUNDED IMMEDIATELY UNTIL THE PROBLEM IS CORRECTED.*** *9. Examine the structure for its condition in the locations that follow:*		
	9.1. Pedestal.		
	9.2. Crew seats.		
	9.3. Bulkhead at fuselage station 81.08.		
	9.4. Vertical tunnel. Examine between the top section of the vertical tunnel and the roof beam assembly for possible cracks.		
	9.5. Roof beam.		
	9.6. Hat bin.		
	9.7. Bulkhead at fuselage station 142.715.		
BHT-407-MM, Chapter 53	9.8. Side body fairing fasteners for damage.		
BHT-407-MM, Chapter 96	*10. Examine the electrical harness condition and safety in the locations that follow:*		
	10.1. Pedestal.		
	10.2. Crew seats.		
	10.3. Vertical tunnel.		
	10.4. Roof beam.		
	10.5. Hat bin.		
BHT-407-MM, Chapter 71	*11. Examine the internal structure of forward and side engine mount attach points for their condition and safety.*		

POST OFFICE BOX 482 • FORT WORTH, TEXAS 76101

Table 1. 12 Month Inspection (continued)

DATA REFERENCE	INSPECTION TASK DESCRIPTION	INITIAL MECH	INITIAL OTHER
	12. Examine the internal structure of the frame at fuselage station 199.039 (WL 72.602) for its condition and safety.		
	FUEL SYSTEM		
BHT-407-MM, Chapter 96 and BHT-407-MM, Chapter 96	1. Do a fuel low annunciator circuit operational check.		
	2. Examine the operation of the check valves for the forward fuel cell transfer pumps. Operate each transfer/boost pump assembly independently and visually make sure of the flow of fuel from the outlet of the fuel transfer line in the aft fuel cell. The fuel system must be defueled until the fuel level is below the transfer line outlet.		
BHT-407-MM, Chapter 28	*3. Examine the fuel system shutoff valve and components for their condition, leaks, and safety.*		
	TAILBOOM		
	1. Examine the steps that follow for their condition and safety:		
BHT-407-MM, Chapter 8	1.1. Ballast.		
BHT-407-MM, Chapter 67	1.2. Controls.		
BHT-407-MM, Chapter 53	*1.3. Horizontal stabilizer with slats and auxiliary finlets.*		
BHT-407-MM, Chapter 53	*1.4. Vertical fin with the tail stinger and weight.*		
BHT-407-MM, Chapter 96	1.5. Electrical harness.		
	MAIN ROTOR MAST		
BHT-407-MM, Chapter 63	: All main rotor mast: *1. Do an inspection on the internal diameter of the mast each 12 months.*		
BHT-407-MM, Chapter 63	: Main rotor masts P/N 407-040-038-101, -105, -109, -111, -111R, -111T, and 111T1: *2. Do an inspection of the lower cone clamp journal of the mast each 12 months.*		
	ENGINE		
BHT-407-MM, Chapter 95 and BHT-407-MM, Chapter 95	SN: 53000-54299: 1. Do a MGT indicator functional check in Normal Mode and Start Mode.		
BHT-407-MM, Chapter 95	SN: 54300-Subsequent: 2. Do a PSI - MGT operational check (407GX).		
BHT-407-MM, Chapter 96	SN: 54304, 54567, 54805-Subsequent: 3. Do the visual inspection of the Transient Voltage Suppressor (TVS) (407GXi).		
BHT-407-MM, Chapter 96	SN: 54304, 54567, 54805-Subsequent: *4. Do the functional check of the Transient Voltage Suppressor (TVS) (407GXi).*		
	GROUND RUN		
BHT-407-FM-X	*1. Complete a ground run at 100% N_R to examine for leaks and make sure that the system operates.*		
	SN: 54300-Subsequent: **GARMIN SOFTWARE**		
BHT-407-MM, Chapter 95	*1. Make sure that the latest software version configuration available on the Bell Textron website (www.bellhelicopter.net).*		
	2. Upgrade the helicopter to the latest software version.		
	FIRE PROTECTION		
BHT-407-MM, Chapter 26	*Do a detailed inspection of the fire extinguisher bottle and bracket (if installed).*		

POST OFFICE BOX 482 • FORT WORTH, TEXAS 76101

Intentionally blank page

POST OFFICE BOX 482 • FORT WORTH, TEXAS 76101

Scheduled Inspections - 24 Month Inspection

Procedure

Table 1. 24 Month Inspection

DATA REFERENCE	INSPECTION TASK DESCRIPTION	INITIAL MECH	INITIAL OTHER
	DATE: _____W.O. _____		
	FACILITY: _____		
	HELICOPTER S/N: _____		
	REGISTRY NO.: _____		
	TOTAL TIME:_____		
	SIGNATURE:_____		
	FUEL SYSTEM		
BHT-407-MM, Chapter 28 or BHT-407-MM, Chapter 28 and BHT-407-MM, Chapter 28	1. Remove the fuel transfer/fuel boost pump assemblies. Look into the fuel cells. Examine them for unwanted material, water contamination, and fungus growth.		
BHT-407-MM, Chapter 28 and BHT-407-MM, Chapter 28	2. Examine the fuel transfer/fuel boost pump check valves for condition.		
BHT-407-MM, Chapter 28	3. Disassemble, examine, and functionally test the fuel transfer/fuel boost pump check/thermal relief valves for condition.		
BHT-407-MM, Chapter 95	SN: 53000-54299: 4. Do a calibration of the fuel quantity system.		
BHT-407-MM, Chapter 95	SN: 54300-Subsequent: 5. Do a calibration of the fuel quantity system.		
	D E L E T E D		
	FLIGHT CONTROL BOLTS/NUTS		
BHT-407-MM, Chapter 67	1. Examine the bolts and the nuts of the flight controls for condition.		
	SERVO ACTUATORS		
BHT-407-MM, Chapter 29	1. Examine the bypass spool valve of the servo actuators for correct movement.		
	GROUND RUN		
BHT-407-FM-X	1. Complete a ground run at 100% N_R to check for leaks and confirm system operation.		

POST OFFICE BOX 482 • FORT WORTH, TEXAS 76101

Intentionally blank page

POST OFFICE BOX 482 • FORT WORTH, TEXAS 76101

Scheduled Inspections - 1200 Hour Inspection

Procedure

Table 1. 1200 Hour Inspection

DATA REFERENCE	INSPECTION TASK DESCRIPTION	INITIAL	
		ME-CH	OTH-ER
	DATE: _____W.O. _____ FACILITY: _____ _____ HELICOPTER S/N: _____ _____ REGISTRY NO.: _____ _____ TOTAL TIME:_____ _____ SIGNATURE:_____ _____ **CONTROLS**		
BHT-407-MM, Chapter 67, BHT-407-MM, Chapter 67, and BHT-407-MM, Chapter 67	1. Remove and examine the tail rotor pitch change control tube inside the tailboom for condition.		

POST OFFICE BOX 482 • FORT WORTH, TEXAS 76101

Intentionally blank page

POST OFFICE BOX 482 • FORT WORTH, TEXAS 76101

Scheduled Inspections - 1200 Hour or 24 Month Inspection Procedure

Table 1. 1200 Hour or 24 Month Inspection

DATA REFERENCE	INSPECTION TASK DESCRIPTION	INITIAL MECH	INITIAL OTHER
	DATE: _____W.O. _____		
	FACILITY: _____		
	HELICOPTER S/N: _____		
	REGISTRY NO.: _____		
	TOTAL TIME:_____		
	SIGNATURE:_____		
	PILOT CYCLIC CONTROL STICK		
BHT-407-MM, Chapter 67	1. Perform a 1200 hour or 24 month inspection of the pilot cyclic control stick.		
	AUTOMATIC FLIGHT CONTROL SYSTEM (AFCS) 407-706-061/407-706-067		
	NOTE The following steps are only applicable to the 407GX/407GXi with the AFCS installed.		
	1. Visually examine the nylatron strips on the following components inside the vertical tunnel for condition, wear, and debonding:		
BHT-407-MM, Chapter 67	1.1. Longitudinal SCAS actuator assembly.		
BHT-407-MM, Chapter 67	1.2. Lateral SCAS actuator assembly.		
BHT-407-MM, Chapter 67 or BHT-407-MM, Chapter 67	1.3. Directional control tube assembly.		
BHT-407-MM, Chapter 67 *and* BHT-407-MM, Chapter 67	2. Visually examine the left liner on the left web and the gutter assembly on the right web inside the vertical tunnel for condition and wear.		

POST OFFICE BOX 482 • FORT WORTH, TEXAS 76101

Intentionally blank page

POST OFFICE BOX 482 • FORT WORTH, TEXAS 76101

Scheduled Inspections - 2500 Hour Inspection

Procedure

Table 1. 2500 Hour Inspection

DATA REFERENCE	INSPECTION TASK DESCRIPTION	INITIAL MECH	INITIAL OTHER
	DATE: _____W.O. _____ **FACILITY: _____** **HELICOPTER S/N: _____** **REGISTRY NO.: _____** **TOTAL TIME:_____** **SIGNATURE:_____**		
BHT-407-MM, Chapter 67	**CONTROLS** **NOTE** For new and in-service pitch link assemblies, the first 2500-hour inspection occurs at 5000 hours of component operating time, and subsequent inspections occur every 2500 hours. For main rotor pitch link assemblies already removed from service due to reaching the 5000-hour life limit previously required (i.e., Pre Revision 28, dated 29 July 2010), do the 2500-hour inspection before returning them to service and do the inspection again every 2500 hours of component operating time. 1. Perform a 2500-hour inspection of the main rotor pitch link assemblies.		

POST OFFICE BOX 482 • FORT WORTH, TEXAS 76101

Intentionally blank page

POST OFFICE BOX 482 • FORT WORTH, TEXAS 76101

Scheduled Inspections - Miscellaneous Inspection Procedure

Table 1. Miscellaneous Inspection

DATA REFERENCE	INSPECTION TASK DESCRIPTION	INITIAL	
		MECH	OTHER
BHT-407-MM, Chapter 97	**DATE:** _____ **W.O.** _____ **FACILITY:** _____ **HELICOPTER S/N:** _____ **REGISTRY NO.:** _____ **TOTAL TIME:** _____ **SIGNATURE:** _____ **NOTE** Refer to the requirements from your government authority for the applicable interval(s). 1. Do an operational check of the pressure altitude reporting and ADS-B Out reporting.		

POST OFFICE BOX 482 • FORT WORTH, TEXAS 76101

Intentionally blank page

POST OFFICE BOX 482 • FORT WORTH, TEXAS 76101

Special Inspections - Torque/Friction Check

A special inspection (Table 1) is temporary or of a special time interval that is not consistent with the scheduled inspection.

- Torque/Friction Check (Table 1)
- Freewheel Lubrication System (407-A-05-40-00-01A-283A-A / 00038)

Table 1. Special Inspections

DATE: _____ **W.O.** _____

FACILITY: _____

HELICOPTER S/N: _____

REGISTRY NO.: _____

TOTAL TIME: _____

SIGNATURE: _____

COMPONENT	INSPECTION SCHEDULE						
	HOURS AFTER INITIAL INSTALLATION					SIGNATURE	
	AFTER GROUND RUN	1 to 5 HOURS	10 to 25 HOURS	25 ±5 HOURS	100 ±10 HOURS	MECH	OTHER
Main Rotor Hub Mast Nut Torque Check	X	X (1)					
Main Rotor Hub Through Bolt Torque Check	X	X (1)					
Main Rotor Hub Lower Cone Torque Check	X	X (1)					
Tail Rotor Gearbox Torque Check			X (2)				
All Tail Rotor Driveshaft Disc Pack Couplings Torque Check			X (2)				
Tail Rotor Hub Mast Nut Torque Check		X (3)					
Engine Mounts Torque Check					X		
Tailboom Attachment Hardware Torque Check		X (3)					
Transmission Top Case Torque Check					X		
Swashplate Tilt Friction			X (4)				
Fuel System	Immediately after maintenance or component change (5)						
Expandable Blade Bolts Tension Check				X (6)			

NOTES:

1 Torque check must be repeated every 1 to 5 hours until torque is stabilized.

2 Torque check must be repeated every 10 to 25 hours until the torque is stabilized. After the torque has stabilized, repeat the torque check every 300 flight hours (specified in progressive inspection).

3 Torque check must be repeated every 1 to 5 hours until torque is stabilized. After the torque has stabilized, repeat the torque check every 300 flight hours (specified in progressive inspection).

4 Repeat the swashplate tilt friction check every 10 to 25 hours until the friction has stabilized within limits. Also repeat the tilt friction check every 300 flight hours (specified in progressive inspection).

POST OFFICE BOX 482 • FORT WORTH, TEXAS 76101

Table 1. Special Inspections (continued)

DATE: _____ W.O. _____

FACILITY: _____

HELICOPTER S/N: _____

REGISTRY NO.: _____

TOTAL TIME: _____

SIGNATURE: _____

COMPONENT	INSPECTION SCHEDULE						
	HOURS AFTER INITIAL INSTALLATION					SIGNATURE	
	AFTER GROUND RUN	1 to 5 HOURS	10 to 25 HOURS	25 ±5 HOURS	100 ±10 HOURS	MECH	OTHER

5 Complete fuel system operational check immediately after fuel system maintenance or component change (BHT-407-MM, Chapter 28).

6 Do a tension check of the expandable blade bolts 20 to 30 hours after completion of the 600 hour/ 12 month inspection in accordance with the instructions for installation of the main rotor blade (BHT-407-MM, Chapter 62). Make sure the value of the tension did not change more than 5 pounds (2 kg) since the last check.

POST OFFICE BOX 482 • FORT WORTH, TEXAS 76101

Special Inspections - Freewheel Lubrication System

Preliminary requirements

Consumables, materials and expendables

Nomenclature	Identification No.	Qty	Remarks
Drycleaning solvent	C-304	AR	

Procedure

Table 1. Freewheel Lubrication System

DATA REFERENCE	INSPECTION TASK DESCRIPTION		
	DATE: _____W.O. _____ FACILITY: _____ HELICOPTER S/N: _____ REGISTRY NO.: _____ TOTAL TIME:_____ SIGNATURE:_____		
	This special inspection is required to make sure that there is no debris or blockage of restrictor 406-040-623-101, restrictor 406-040-624-101 and screen fitting 50-138-1 located on the left side of the forward engine firewall.		
	WARNING **THE FREEWHEEL LUBRICATION SYSTEM INSPECTION MUST BE DONE AFTER ANY OF THE FOLLOWING EVENTS:** • Installation of the transmission. Refer to the transmission operational check. • *The disconnection, replacement, or reconnection of any hose or fitting between restrictor 406-040-623-101, restrictor 406-040-624-101, screen fitting 50-138-1 and filter 50-075-1.*		
	1. Do the inspection following the post assembly and installation leak check of any of the following:		
BHT-407-MM, Chapter 63 Figure 1	• Filter (10)		
BHT-407-MM, Chapter 63 Figure 2	• *Screen Fitting (46)*		
BHT-407-MM, Chapter 63 Figure 2	• *Restrictor (37 and 39)*		
BHT-407-MM, Chapter 63 Figure 2	• Oil manifold (32)		
Figure 2	• Transmission oil pressure switch (29) • Transmission oil pressure transmitter (30) • Hose assembly (either end) (8) • Union and fitting (26) • Tube assembly (either end) (25)		

POST OFFICE BOX 482 • FORT WORTH, TEXAS 76101

Table 1. Freewheel Lubrication System (continued)

DATA REFERENCE	INSPECTION TASK DESCRIPTION		
	• Cap (28) *2. Clean all the components with a clean cloth moistened with* drycleaning solvent (C-304). *Dry with a clean cloth.*		

POST OFFICE BOX 482 • FORT WORTH, TEXAS 76101

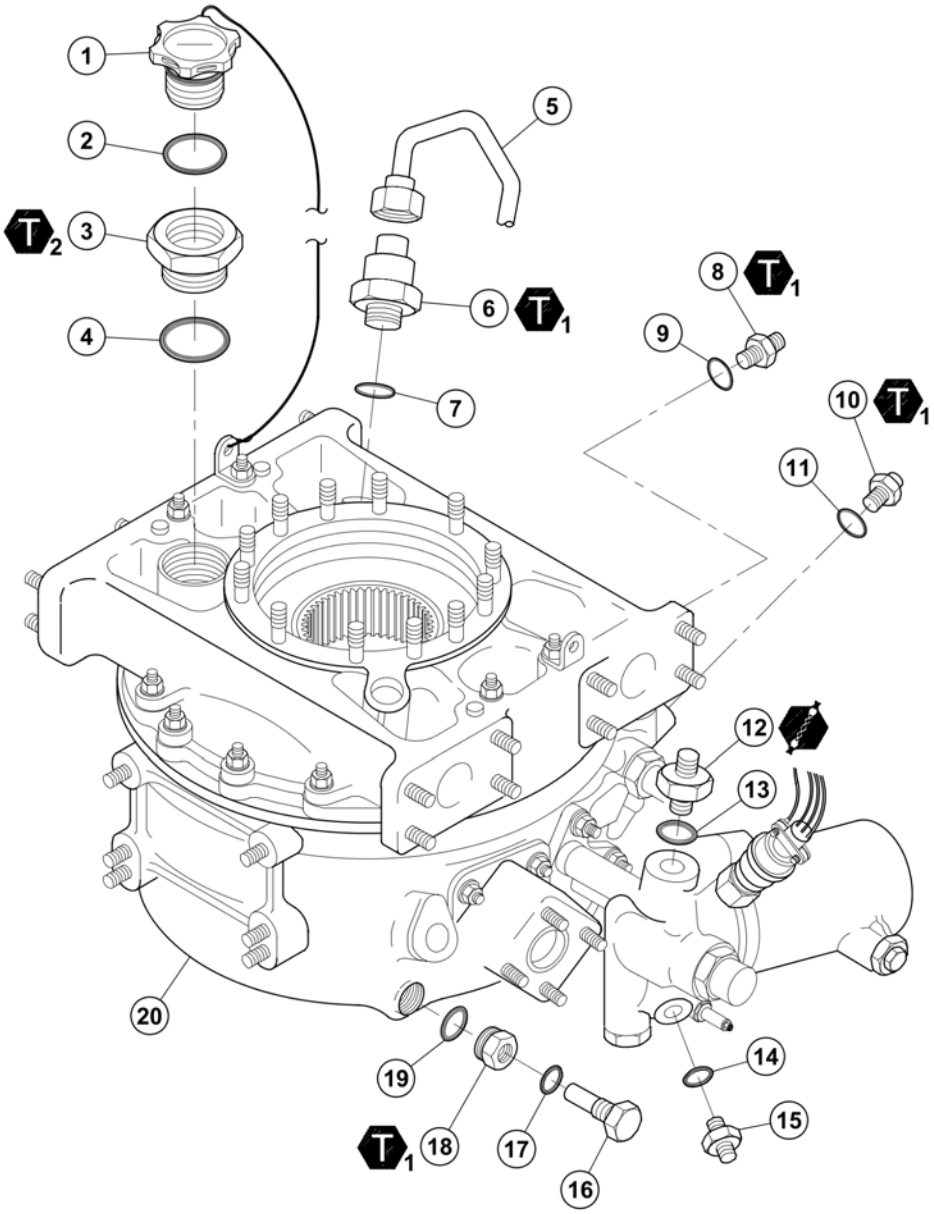

1. Filler cap
2. Preformed packing
3. Housing
4. Preformed packing
5. Tube assembly
6. Breather
7. Preformed packing
8. Union
9. Preformed packing
10. Filter
11. Preformed packing
12. Reducer
13. Preformed packing
14. Preformed packing
15. Reducer
16. Drain fitting
17. Preformed packing
18. Housing
19. Preformed packing
20. Lower case

LOCKWIRE (C-405)

T1 75 TO 125 IN-LBS (8.47 TO 14.1 Nm)

T2 75 TO 150 IN-LBS (8.47 TO 16.9 Nm)

ICN-407-A-632301-B-97499-00001-A-001-01

Figure 1. Transmission Components (Sheet 1 of 1)

POST OFFICE BOX 482 • FORT WORTH, TEXAS 76101

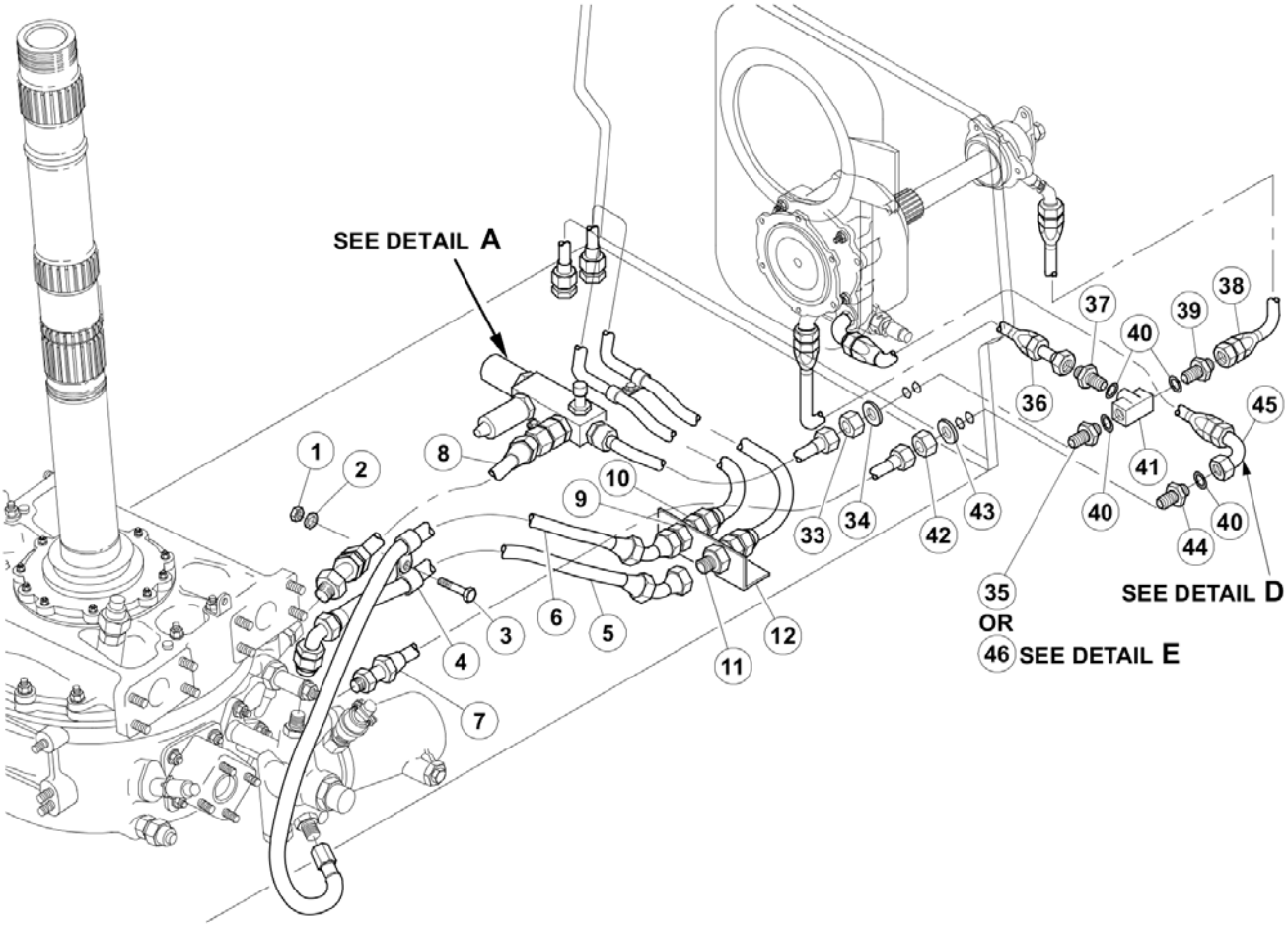

S/N 53000 THROUGH 53285 (PRE TB 407-99-20)

ICN-407-A-631300-B-97499-00006-A-002-01

Figure 2. Freewheel Lubrication System (Sheet 1 of 5)

POST OFFICE BOX 482 • FORT WORTH, TEXAS 76101

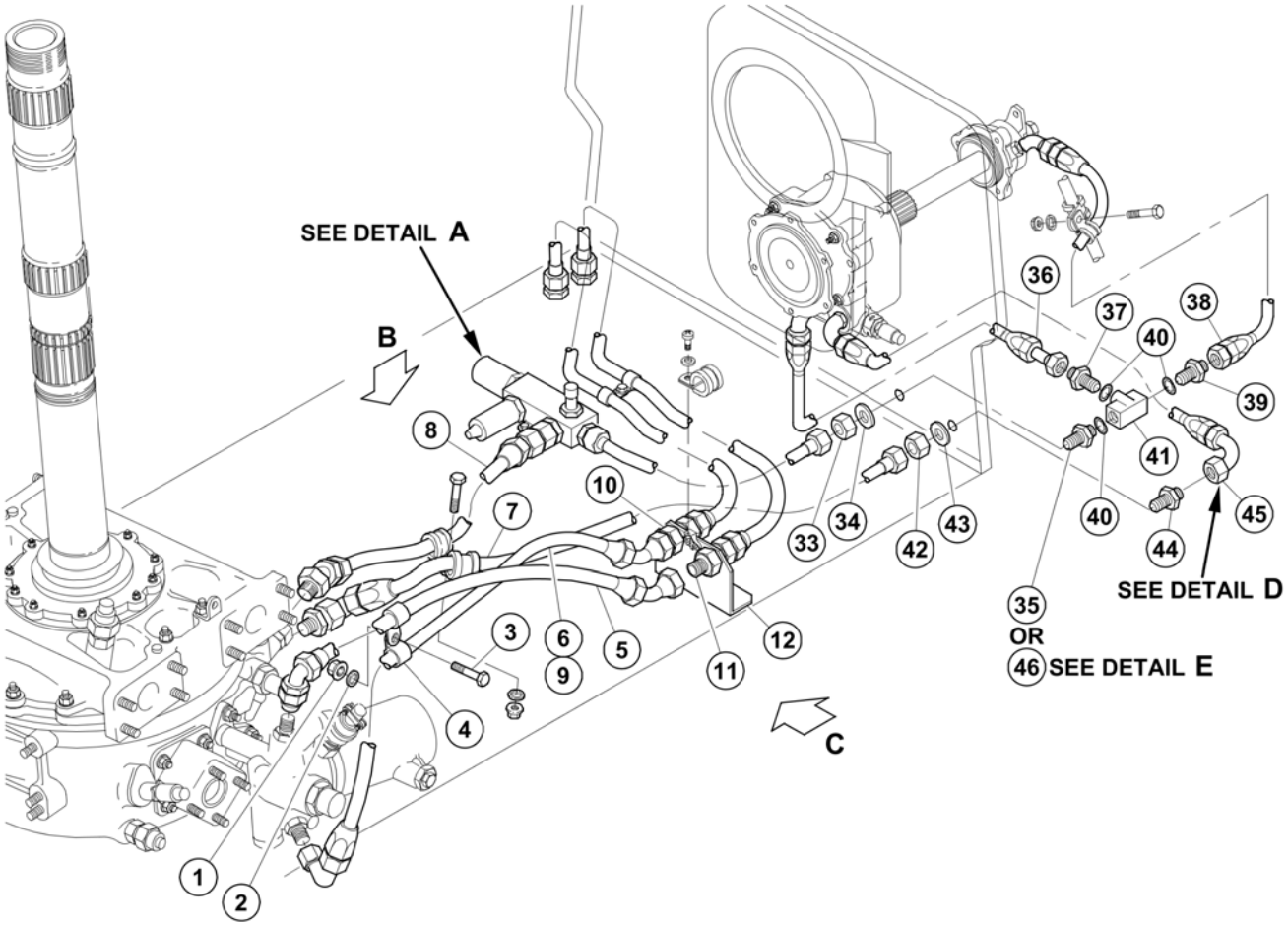

S/N 53000 THROUGH 53285 (POST TB 407-99-20)
AND S/N 53286 AND SUBSEQUENT

ICN-407-A-631300-B-97499-00007-A-001-01

Figure 2. Freewheel Lubrication System (Sheet 2 of 5)

POST OFFICE BOX 482 • FORT WORTH, TEXAS 76101

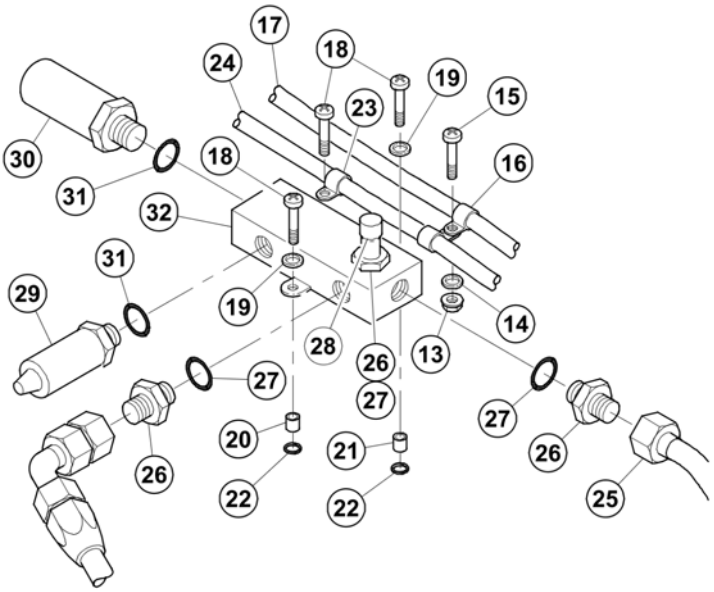

DETAIL A
S/N 53000 AND SUBSEQUENT

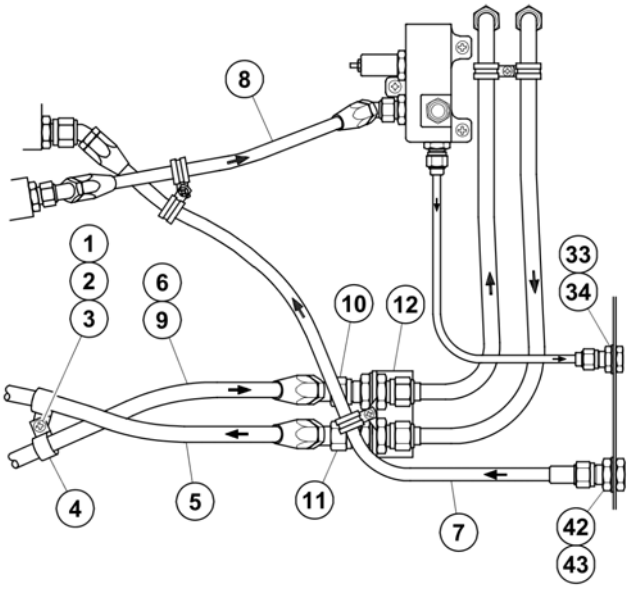

VIEW B
S/N 53000 THROUGH 53285 (POST TB 407-99-20) AND
S/N 53286 THROUGH 53631 (PRE TB 407-05-71)

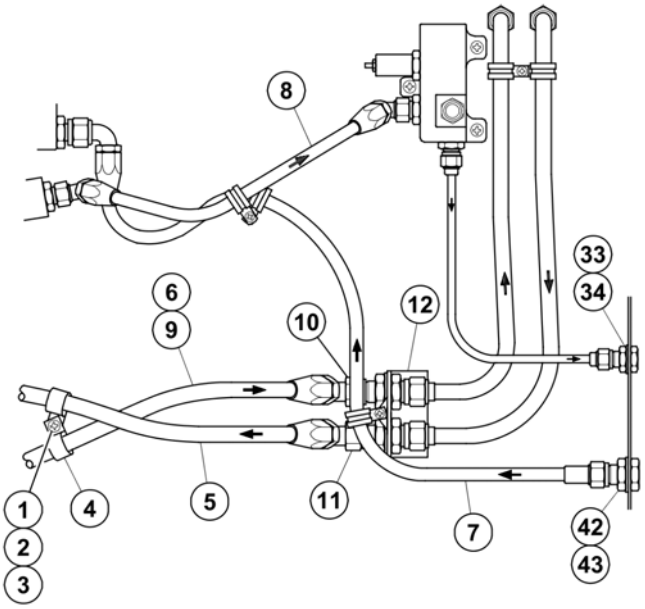

VIEW B
S/N 53000 THROUGH 53631 (POST TB 407-05-71) AND
S/N 53632 AND SUBSEQUENT

ICN-407-A-631300-B-97499-00008-A-001-01

Figure 2. Freewheel Lubrication System (Sheet 3 of 5)

POST OFFICE BOX 482 • FORT WORTH, TEXAS 76101

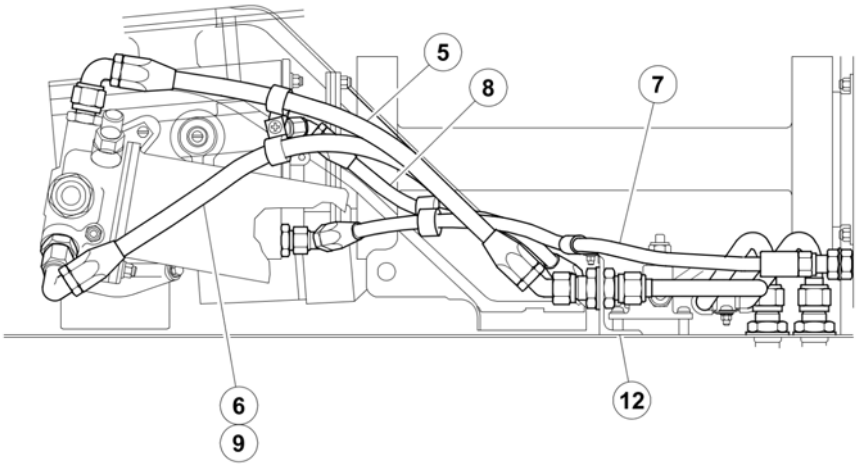

VIEW C
S/N 53000 THROUGH 53285 (POST TB 407-99-20)
AND S/N 53286 AND SUBSEQUENT

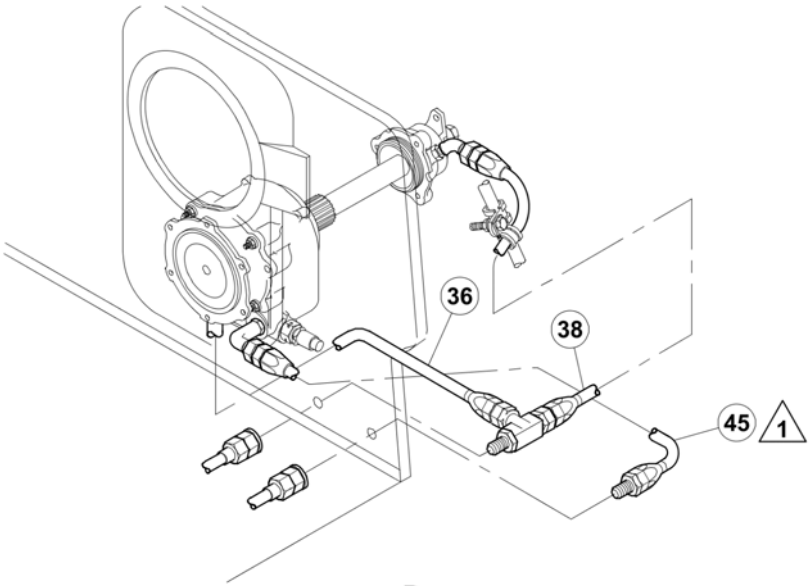

DETAIL D
S/N 53000 THROUGH 53285 (POST TB 407-99-20)
AND S/N 53286 AND SUBSEQUENT

ICN-407-A-631300-B-97499-00009-A-001-01

Figure 2. Freewheel Lubrication System (Sheet 4 of 5)

POST OFFICE BOX 482 • FORT WORTH, TEXAS 76101

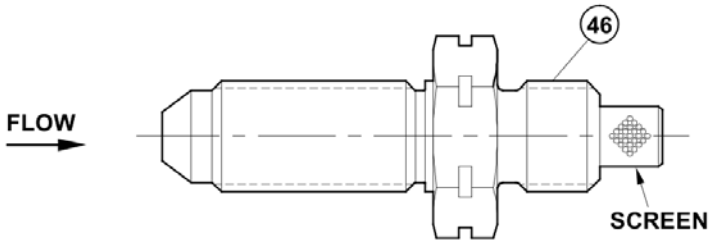

DETAIL E
S/N 54167 THROUGH 54299 (POST TB 407-17-124)
AND S/N 54703 AND SUBSEQUENT

ITEM NO.	RESTRICTOR PART NUMBER	ORIFICE DIAMETER INCH (MM)
37	406-040-623-101	0.035 TO 0.040 (0.089 TO 1.02)
39	406-040-624-101	0.027 TO 0.032 (0.69 TO 0.81)

1. Nut
2. Washer
3. Screw
4. Clamp
5. Hose assembly
6. Hose assembly
7. Hose assembly
8. Hose assembly
9. Nut
10. Washer
11. Union
12. Bracket
13. Nut
14. Washer
15. Screw
16. Clamp
17. Tube assembly
18. Screw
19. Washer
20. Spacer
21. Spacer
22. Washer
23. Clamp
24. Tube assembly
25. Tube assembly
26. Union
27. Packing
28. Cap
29. Transmission oil pressure switch
30. Transmission oil pressure transmitter
31. Packing
32. Manifold
33. Nut
34. Washer
35. Union
36. Hose assembly
37. Restrictor (406-040-623-101)
38. Hose assembly
39. Restrictor (406-040-624-101)
40. Packing
41. Tee
42. Nut
43. Washer
44. Union
45. Hose assembly
46. Screen fitting
47. Deleted
48. Deleted
49. Deleted

NOTE

1 **Route the freewheel oil return hose (45) under the freewheel oil pressure hoses (36 and 38).**

ICN-407-A-631300-B-97499-00010-A-002-01

Figure 2. Freewheel Lubrication System (Sheet 5 of 5)

POST OFFICE BOX 482 • FORT WORTH, TEXAS 76101

Conditional Inspections - Description

A conditional inspection does not occur at a specified time. It is caused by known or suspected unusual events, malfunctions, or defects.

Make an analysis of components removed because of a Conditional Inspection, as a related group. The removal records for each of these components must agree with the part number and the serial number of each of the other components. Put a tag on the removed part(s) sent for analysis that states: “THIS (NAME OF PART) WAS REMOVED FROM SERVICE BECAUSE OF A (REASON FOR REMOVAL).”

Events that require a conditional inspection include (but are not limited to) the following:

- Hard landing
- Sudden stoppage (main rotor) power ON or OFF
- Sudden stoppage (tail rotor) power ON or OFF
- Main rotor overspeed
- Overtorque
- Engine compressor stall or surge
- After lightning strike
- *Strike impact to auxiliary finlets by main rotor blades*

POST OFFICE BOX 482 • FORT WORTH, TEXAS 76101

Intentionally blank page

POST OFFICE BOX 482 • FORT WORTH, TEXAS 76101

Conditional Inspections - Hard Landing

Procedure

Table 1. Hard Landing

DATA REFERENCE	INSPECTION TASK DESCRIPTION	INITIAL MECH	INITIAL OTHER
	DATE: _____W.O. _____		
	FACILITY: _____		
	HELICOPTER S/N: _____		
	REGISTRY NO.: _____		
	TOTAL TIME:_____		
	SIGNATURE:_____		
	A hard landing is any accident or incident in which the impact of the helicopter with the ground causes severe pitching of the main rotor or results in noticeable yielding or cracking of the fuselage pylon structure or the landing gear.		
	After a hard landing: If the cabin fuselage is resting on the ground or shows signs of having touched the ground, think of it as having been exposed to loads in excess of 10 G.		
	If you think that the helicopter had a hard landing, do the steps that follow:		
	MAIN ROTOR HUB AND BLADES		
BHT-407-MM, Chapter 62	1. Examine the main rotor blades for evidence of contact with the tail-boom. If you find any damaged, complete this inspection and do a SUDDEN STOPPAGE - MAIN ROTOR inspection.		
	2. Examine the main rotor blades for damage. If one blade shows signs of delamination, remove all the blades. Put a tag on each blade and write, “THIS BLADE WAS REMOVED FROM SERVICE BECAUSE OF A HARD LANDING.” Send all of the blades to an approved facility for an analysis. If you do not find any damage, the blades are serviceable.		
	3. Examine the main rotor hub for damage. If the main rotor hub shows signs of damage, remove it. Put a tag on the hub and write, “THIS HUB WAS REMOVED FROM SERVICE BECAUSE OF A HARD LANDING.” Send it to an approved facility for overhaul. If you do not find any damage, the main rotor hub is serviceable.		
BHT-407-MM, Chapter 62	4. Examine the main rotor Frahm (if installed, TB 407-03-51) for internal and external damage. If the main rotor Frahm shows signs of damage, remove it. Put a tag on the Frahm and write, “THIS FRAHM WAS REMOVED FROM SERVICE BECAUSE OF A HARD LANDING.” Send it to an approved facility for overhaul. If you do not find any damage, the main rotor Frahm is serviceable.		
	TAIL ROTOR BLADE ASSEMBLY		
BHT-407-MM, Chapter 64	1. Examine the tail rotor blade assembly for damage. If you find any damage, complete this inspection and also do a SUDDEN STOPPAGE - TAIL ROTOR inspection.		
	2. If you do not find any damage, the tail rotor hub and blade assembly is serviceable.		
	AIRFRAME		
BHT-407-MM, Chapter 53	1. Examine the airframe for damage.		
	2. If you find any one of the signs that follow, the fuselage must be aligned in a Bell Helicopter approved fixture:		
	TOP DECK		
	2.1. Deformation or damage to the structure at the pylon beam attachment points.		

POST OFFICE BOX 482 • FORT WORTH, TEXAS 76101

Table 1. Hard Landing (continued)

DATA REFERENCE	INSPECTION TASK DESCRIPTION	INITIAL MECH	INITIAL OTHER
	2.2. If the upper roof shell needs to be replaced.		
	2.3. Deformation or damage at the left hand or right hand restraint stop.		
	CABIN INTERIOR		
	2.4. Buckling or other distortion of the center post cap angle.		
	2.5. Cracks and deformation of the pylon supporting structure in the roof beam.		
	2.6. If the roof beam needs to be replaced.		
	FORWARD FUSELAGE		
	2.7. Cowling or doors are not aligned.		
	2.8. Deformation or damage at the landing gear attachment points.		
	2.9. If the forward lower shell needs to be replaced.		
	2.10. If the aft lower shell needs to be replaced.		
BHT-407-MM, Chapter 53	2.11. If the side body fairings needs to be replaced.		
	2.12. Deformation or damage to of the bulkheads at stations 76 and 155.		
	INTERMEDIATE FUSELAGE		
BHT-407-MM, Chapter 53	2.13. Distortion or damage to the upper longerons.		
	2.14. Cracks or damage at the side or forward engine mount to fuselage attachment points.		
	2.15. If the fuselage composite skin needs to be replaced.		
	2.16. If the engine pan needs to be replaced.		
	2.17. Deformation or damage to the aft fuselage/tailboom attachment points.		
	2.17.1. If the access cover to the tail rotor flight control and the adjacent structure are damaged, then the fuselage is not aligned.		
	3. If the damage to the fuselage structure is such that you must align the fuselage in a Bell Helicopter approved fixture, remove the components that follow. Put a tag on each component and write. “THIS COMPONENT WAS REMOVED FROM SERVICE BECAUSE OF A HARD LANDING.” Send them to an approved facility for overhaul:		
	3.1. The transmission assembly.		
	3.2. The mast assembly.		
	3.3. The freewheel assembly.		
	3.4. Remove and discard the engine to transmission driveshaft assembly.		
BHT-407-MM, Chapter 65	4. Disassemble the tail rotor driveshafts and examine them for condition.		
BHT-407-MM, Chapter 53	5. If installed, do an inspection of the wire strike protection system, lower and upper cutter assemblies. If there is evidence of main rotor blade contact with the upper cutter assembly, inspect main rotor blades for damage (BHT-407-MM, Chapter 62).		
BHT-407-MM, Chapter 53	**TAILBOOM**		
	1. The signs that follow show that the tailboom must be aligned in a Bell Helicopter approved fixture:		
	1.1. Tailboom skin deformation, buckling, or cracks.		
	1.2. Damaged bolts or bolt holes at the attachment points.		

POST OFFICE BOX 482 • FORT WORTH, TEXAS 76101

Table 1. Hard Landing (continued)

DATA REFERENCE	INSPECTION TASK DESCRIPTION	INITIAL MECH	INITIAL OTHER
	2. If the damage to the tailboom is such that you must align the tailboom in a Bell Helicopter approved fixture, remove the components that follow. Put a tag on each component and write, “THIS COMPONENT WAS REMOVED FROM SERVICE BECAUSE OF A HARD LANDING.” Send them to an approved facility for overhaul.		
	2.1. The freewheel assembly.		
	2.2. The tail rotor gearbox assembly.		
	2.3. Remove and discard the engine to transmission driveshaft assembly.		
BHT-407-MM, Chapter 65	3. Disassemble the tail rotor driveshafts and examine them for condition.		
BHT-407-MM, Chapter 53	4. Accomplish waviness check of the tailboom skin. If waviness exceeds limits, send tailboom to a Bell Helicopter approved structural repair facility.		
BHT-407-MM, Chapter 32	5. Damage or distortion of the tail skid and the mounting points is not cause to send the tailboom for repair on an alignment fixture. Repair or replace the damaged parts.		
BHT-407-MM, Chapter 53	6. Examine the tailboom skin for damage in the area of the tail rotor blade tip path. Repair or replace the damaged area.		
	LANDING GEAR		
BHT-407-MM, Chapter 32	1. Examine the landing gear for condition and security. Examine the components that follow:		
	1.1. Skid tubes.		
	1.2. Skid saddles.		
	1.3. Skid shoes.		
	1.4. Retaining strap and rubber cushion.		
	1.5. Rocking beam.		
	1.6. Crosstubes.		
	1.7. Attachment fittings.		
BHT-407-MM, Chapter 32	2. Do a crosstube deflection check.		
	DRIVE TRAIN SYSTEM		
	1. If any of the conditions described below are noted, then the affected components must be sent to an approved facility for overhaul. Put a tag on each component and write, “THIS COMPONENT WAS REMOVED FROM SERVICE BECAUSE OF A HARD LANDING.”		
	1.1. Signs of damage to the mast, transmission, freewheel, tail rotor driveshafts, or to the tail rotor gearbox, if caused by the hard landing.		
	1.2. Metal is collected on the chip detector of the transmission, freewheel, or the tail rotor gearbox.		
	1.3. Signs of damage to the structure around the transmission mounting points (four elastomeric mounts at the corners of the top case and two elastomeric mounts at the bottom of the main case, one on each side). Use a 10X power magnifying glass and look for cracks, deformation, or movement of the attachment fittings.		
	1.4. Signs of damage to the roof structure where the side beams attach to the roof.		
	1.5. Examine for loose attaching hardware in the locations that follow:		
BHT-407-MM, Chapter 63	1.5.1. Transmission.		
BHT-407-MM, Chapter 63	1.5.2. Engine to transmission driveshaft.		
BHT-407-MM, Chapter 65	1.5.3. Tail rotor gearbox.		
	1.5.4. Tail rotor driveshafts.		

POST OFFICE BOX 482 • FORT WORTH, TEXAS 76101

Table 1. Hard Landing (continued)

DATA REFERENCE	INSPECTION TASK DESCRIPTION	INITIAL MECH	INITIAL OTHER
	1.6. Examine the corner mounts for condition.		
BHT-407-MM, Chapter 63	1.7. Examine the pylon stop deck fittings for condition.		
	1.8. Examine the engine to transmission driveshaft assembly for signs of damage caused by the hard landing. Remove and discard damaged engine to transmission driveshaft assembly.		
	2. If no component shows damage that is caused by a hard landing, then all drivetrain components, except for the mast, are serviceable.		
BHT-407-MM, Chapter 63	3. Examine the mast for distortion. If you see any distortion, discard the mast assembly. If you do not see any distortion, remove the mast assembly. Put a tag on the mast assembly and write, “THIS COMPONENT WAS REMOVED FROM SERVICE BECAUSE OF A HARD LANDING.” Send the mast assembly to an approved overhaul facility.		
	4. Examine the transmission oil system for condition and leaks.		
BHT-407-MM, Chapter 71	**POWER PLANT**		
Rolls-Royce Engine Operations and Maintenance Manual	1. Do the engine hard landing inspection.		
	NOTE After a hard landing, if the cabin fuselage is resting on the ground or shows signs of having touched the ground, think of it as having been exposed to loads in excess of 10 G.		
	2. Examine the engine mounts and the fuselage attachment points for condition. If you find deformed engine mount legs, replace them. If you find deformed attachment points, the fuselage must be aligned in a fixture. If the fuselage must be aligned in a fixture, remove the components that follow. Put a tag on the component and write, “THIS COMPONENT WAS REMOVED FROM SERVICE BECAUSE OF A HARD LANDING.” Send the component to an approved facility for overhaul:		
	2.1. Transmission assembly.		
	2.2. Mast assembly.		
	2.3. Complete tail rotor driveshaft.		
	2.4. Remove and discard the engine to transmission driveshaft assembly.		
	3. Examine all of the air, fluid flexible and rigid lines in the engine compartment for leaks, condition, and security.		
	MAIN AND TAIL ROTOR FLIGHT CONTROLS		
	1. Examine all of the main and tail rotor flight controls for condition. Discard damaged parts.		
	2. If you find damage in the rotating controls, do the steps that follow:		
	2.1. Discard all of the main rotor control tubes and attaching hardware.		
	2.2. Remove the main rotor hub assembly. Put a tag on the main rotor hub assembly and write, “THIS HUB ASSEMBLY WAS REMOVED FROM SERVICE BECAUSE OF A HARD LANDING.” Send the hub assembly to an approved facility for overhaul.		
BHT-407-MM, Chapter 67	2.3. Remove the swashplate and support assembly. Put a tag on the swashplate and support assembly and write, “THIS SWASHPLATE AND SUPPORT ASSEMBLY WAS REMOVED FROM SERVICE BECAUSE OF A HARD LANDING.” Send the swashplate and support assembly to an approved facility for overhaul.		
	HYDRAULIC SYSTEM		

POST OFFICE BOX 482 • FORT WORTH, TEXAS 76101

Table 1. Hard Landing (continued)

DATA REFERENCE	INSPECTION TASK DESCRIPTION	INITIAL	
		MECH	OTHER
BHT-407-MM, Chapter 29	1. Examine the hydraulic system for condition, leaks, and for correct operation.		
	2. Examine the servo actuator support and the surrounding roof structure for condition.		
	3. Examine all fluid flexible and rigid lines.		
	4. Replace any damaged parts.		
	FUEL SYSTEM		
BHT-407-MM, Chapter 28	1. Examine the fuel system for condition and leaks. Examine the components as follows:		
	1.1. Sump retainers and the surrounding structures.		
	1.2. Area around the fuel sumps for signs of leakage.		
	1.3. Sump drain valves for correct position.		
	1.4. Electrical harness.		
	1.5. Filler cap retainer.		
	1.6. Alignment of the fuel cell fitting with airframe opening.		
	1.7. Fuel cell attachment points.		
	1.8. Fuel probe attachment points.		
	1.9. Auxiliary fuel tank for leakage.		
	1.10. Boost pump for correct operation.		
	1.11. Fuel quantity indicator for correct operation.		
	1.12. All fluid flexible and rigid lines.		
BHT-407-MM, Chapter 53	2. Replace the damaged components. Repair the damaged structure.		
	GROUND-RUN		
BHT-407-FM-X BHT-407-MM, Chapter 28	1. If you find any damage during the inspection, make sure that it is repaired. Make sure that all of the systems are operational. Do a ground run for a minimum of thirty minutes, with the helicopter light on its skids. Examine the fuel and the oil system for leaks.		

POST OFFICE BOX 482 • FORT WORTH, TEXAS 76101

Intentionally blank page

POST OFFICE BOX 482 • FORT WORTH, TEXAS 76101

Conditional Inspections - Sudden Stoppage - Main Rotor - Power ON or OFF

Procedure

Table 1. Sudden Stoppage - Main Rotor - Power "ON" or "OFF"

DATA REFERENCE	INSPECTION TASK DESCRIPTION	INITIAL MECH	INITIAL OTHER
	DATE: _____W.O. _____		
	FACILITY: _____		
	HELICOPTER S/N: _____		
	REGISTRY NO.: _____		
	TOTAL TIME:_____		
	SIGNATURE:_____		
	SUDDEN STOPPAGE - MAIN ROTOR - POWER "ON" OR "OFF"		
	Sudden stoppage is any fast deceleration of the main rotor drive system. This may be caused by the seizure of the transmission or by contact of the main rotor blades with the ground, water, snow, dense vegetation, or other objects of sufficient mass to cause a fast deceleration of the main rotor.		
	When a sudden stoppage has occurred, do the steps that follow:		
	MAIN ROTOR BLADES		
BHT-407-MM, Chapter 62	1. Examine the main rotor blades for damage. Make a close check for wrinkled skin and delamination.		
	2. If any blade is sufficiently damaged, discard it. Put a tag on each remaining blade and write, "THIS BLADE WAS REMOVED FROM SERVICE BECAUSE OF A SUDDEN STOPPAGE." Send the remaining blades to an approved facility for repair.		
	3. If you do not find any damage on a blade, the blade is serviceable.		
	MAIN ROTOR HUB ASSEMBLY		
BHT-407-MM, Chapter 62	1. Examine the main rotor hub and Frahm (if installed, TB 407-03-51) for condition.		
BHT-407-MM, Chapter 62	2. Examine the main rotor Frahm (if installed, TB 407-03-51) for internal and external damage. If the main rotor Frahm shows signs of damage, remove it. Put a tag on the Frahm and write, "THIS FRAHM WAS REMOVED FROM SERVICE BECAUSE OF A HARD LANDING." Send it to an approved facility for overhaul. If you do not find any damage, the main rotor Frahm is serviceable.		
	3. If the main rotor hub is damaged, remove the main rotor hub assembly. Put a tag on the main rotor hub and write, "THIS MAIN ROTOR HUB WAS REMOVED FROM SERVICE BECAUSE OF A SUDDEN STOPPAGE." Send the main rotor hub to an approved facility for overhaul.		
	4. If a main rotor blade (s) is damaged sufficiently to be sent to an approved facility for repair, remove the main rotor hub assembly. Put a tag on the main rotor hub and write, "THIS MAIN ROTOR HUB WAS REMOVED FROM SERVICE BECAUSE OF A SUDDEN STOPPAGE." Send the main rotor hub to an approved facility for overhaul.		
	5. If the main rotor mast was cut in two during the main rotor sudden stoppage, discard the main rotor hub and Frahm assembly.		
	6. Examine the main rotor pitch horn for condition. If you replace a broken pitch horn:		

POST OFFICE BOX 482 • FORT WORTH, TEXAS 76101

Table 1. Sudden Stoppage - Main Rotor - Power "ON" or "OFF" (continued)

DATA REFERENCE	INSPECTION TASK DESCRIPTION	INITIAL MECH	INITIAL OTHER
	DATE: _____W.O. _____		
	FACILITY: _____		
	HELICOPTER S/N: _____		
	REGISTRY NO.: _____		
	TOTAL TIME:_____		
	SIGNATURE:_____		
	6.1. Remove the swashplate and support assembly. Put a tag on the swashplate and support assembly and write, "THIS SWASHPLATE AND SUPPORT ASSEMBLY WAS REMOVED FROM SERVICE BECAUSE OF A SUDDEN STOPPAGE." Send the swashplate and support assembly to an approved facility for overhaul.		
	6.2. Discard all control bolts from hydraulic servo to main rotor pitch horn.		
	7. If the main rotor hub assembly is not damaged, it is serviceable.		
	SWASHPLATE ASSEMBLY		
BHT-407-MM, Chapter 67	1. Examine the swashplate for condition. If you find damage caused by sudden stoppage, do steps 2 and 3.		
	2. If you find damage in step 1, remove the swashplate and support assembly. Put a tag on the swashplate and support assembly and write, "THIS SWASHPLATE AND SUPPORT ASSEMBLY WAS REMOVED FROM SERVICE BECAUSE OF A SUDDEN STOPPAGE." Send the swashplate and support assembly to an approved facility for overhaul.		
	3. Examine all of the control bolts for condition. If you find damage in step 1, discard all of the control bolts from the hydraulic servo actuator to the main rotor hub pitch horns.		
	CONTROL SYSTEM		
BHT-407-MM, Chapter 67	1. Examine the main rotor control tubes for condition. If you replace a bent or broken tube do step 3.		
	2. Examine the main rotor pitch horns for condition. If you replace a broken pitch horn, do step 3.		
	3. Examine all of the control bolts for condition. If you find damage in steps 1 or 2, discard all of the control bolts from the hydraulic servo actuator to the main rotor hub pitch horns.		
	4. If a main rotor control tube assembly is damaged remove the swashplate and support. Put a tag on the swashplate and support assembly and write, "THIS SWASHPLATE AND SUPPORT ASSEMBLY WAS REMOVED FROM SERVICE BECAUSE OF A SUDDEN STOPPAGE." Send the swashplate and support assembly to an approved facility for overhaul.		
	TRANSMISSION AND MAST ASSEMBLY		
	1. If the main rotor mast broke in two during a main rotor sudden stoppage "power on", the main rotor mast has sustained torsional yielding.		
BHT-407-MM, Chapter 63	2. Examine the mast for torsional yielding by doing a TIR check. If the mast is outside the TIR tolerance, you can send the mast to Bell Helicopter for analysis. If the mast shows signs of torsional yielding, discard the mast assembly, the transmission assembly, and the freewheel (outer race, inner race, and clutch).		
	3. If the mast has sustained torsional yielding, replace the transmission corner mounts and the restraints.		

POST OFFICE BOX 482 • FORT WORTH, TEXAS 76101

Table 1. Sudden Stoppage - Main Rotor - Power "ON" or "OFF" (continued)

DATA REFERENCE	INSPECTION TASK DESCRIPTION	INITIAL MECH	INITIAL OTHER
	DATE: _____W.O. _____		
	FACILITY: _____		
	HELICOPTER S/N: _____		
	REGISTRY NO.: _____		
	TOTAL TIME:_____		
	SIGNATURE:_____		
	4. If the mast shows no sign of torsional yielding and if the transmission shows no sign of damage, remove the mast and the transmission assembly and write, "THIS MAST AND TRANSMISSION ASSEMBLY WAS REMOVED FROM SERVICE BECAUSE OF A SUDDEN STOPPAGE." Send the mast and transmission assembly to an approved facility for overhaul.		
	5. If there is large damage to the mast other than torsional yielding, replace mast assembly and top case of transmission.		
	6. Examine the transmission corner mounts and restraint elastomeric for condition. Replace damaged parts.		
BHT-407-MM, Chapter 63	**ENGINE TO TRANSMISSION DRIVESHAFT**		
	1. Remove and discard engine to transmission driveshaft assembly.		
BHT-407-MM, Chapter 63	**FREEWHEEL ASSEMBLY**		
	1. Remove and examine freewheel assembly. If the freewheel outer shaft assembly is sheared, discard the outer shaft, the inner shaft, and the sprag clutch assembly. Put tags on the parts that remain and write, "THIS PART WAS REMOVED FROM SERVICE BECAUSE OF A SUDDEN STOPPAGE." Send the remaining parts to an approved facility for overhaul.		
	2. Do a visual inspection. If there is no damage, send the freewheel assembly to an approved facility for overhaul. Put a tag on the freewheel assembly and write, "THIS FREEWHEEL ASSEMBLY WAS REMOVED FROM SERVICE BECAUSE OF A SUDDEN STOPPAGE." During the overhaul, if they find that the sprag clutch assembly is damaged (cracked or deformed sprag or cage), discard the outer shaft, inner shaft, and sprag clutch assembly.		
	TAIL ROTOR DRIVESHAFTS		
BHT-407-MM, Chapter 65	1. Examine the tail rotor driveshafts for condition.		
	2. If the tail rotor driveshafts show signs of torsional yielding, do a Sudden Stoppage - Tail Rotor Inspection.		
	TOP DECK		
BHT-407-MM, Chapter 53	1. Examine the transmission support beams and the attachment points on the roof for condition. If the roof structure is damaged at the attachment point, location, send the fuselage to an approved repair facility for repair. Repair damaged beam.		
	2. Examine the left hand and the right hand restraint stops for damage at the deck fitting to the transmission fitting pin interface. If the roof structure is damaged at the attachment point location, send the fuselage to an approved repair facility for repair. Replace damaged restraint stops and deck fittings.		
	3. If installed, do an inspection of the wire strike protection system, upper cutter assembly for possible contact and damage.		
	CABIN INTERIOR		

POST OFFICE BOX 482 • FORT WORTH, TEXAS 76101

Table 1. Sudden Stoppage - Main Rotor - Power "ON" or "OFF" (continued)

DATA REFERENCE	INSPECTION TASK DESCRIPTION	INITIAL MECH	INITIAL OTHER
	DATE: _____W.O. _____		
	FACILITY: _____		
	HELICOPTER S/N: _____		
	REGISTRY NO.: _____		
	TOTAL TIME:_____		
	SIGNATURE:_____		
BHT-407-MM, Chapter 53	1. Remove the upholstery in the passenger compartment. Examine the cabin roof and the roof beam at the transmission beam attachment points for cracks. Do a torque check of the attaching hardware of the beam on the pylon mounts.		
BHT-407-MM, Chapter 71	**POWER PLANT**		
BHT-407-MM, Chapter 53	1. Examine the attachment points of the engine mounts at the fuselage for cracks or damage.		
Rolls-Royce Engine Operation and Maintenance Manual	2. Do an engine sudden stoppage inspection.		
BHT-407-MM, Chapter 64	**TAIL ROTOR HUB AND BLADE ASSEMBLY**		
	1. Examine the tail rotor hub and blade assembly for damage. If any damage is found, complete this inspection and also do a SUDDEN STOPPAGE TAIL ROTOR inspection.		
	2. If damage is not found, the tail rotor hub and blade assembly is serviceable.		
BHT-407-MM, Chapter 53	**TAILBOOM**		
	1. Examine the tailboom skin for damage in the area of the tail rotor blade tip path. Repair or replace the damaged area.		

POST OFFICE BOX 482 • FORT WORTH, TEXAS 76101

Conditional Inspections - Sudden Stoppage - Tail Rotor - Power ON or OFF

Procedure

Table 1. Sudden Stoppage - Tail Rotor - Power "ON" or "OFF"

DATA REFERENCE	INSPECTION TASK DESCRIPTION	INITIAL MECH	INITIAL OTHER
	DATE: _____W.O. _____		
	FACILITY: _____		
	HELICOPTER S/N: _____		
	REGISTRY NO.: _____		
	TOTAL TIME:_____		
	SIGNATURE:_____		
	SUDDEN STOPPAGE - TAIL ROTOR - POWER "ON" OR "OFF"		
	Sudden stoppage is any rapid deceleration of the rotor drive system. This may be caused by the seizure of the tail rotor drive system or by contact of the tail rotor blades with the ground, water, snow, dense vegetation, or other objects of sufficient mass. There is a sudden stoppage when a tail rotor blade strikes some object with a force sufficient to require a blade to be discarded.		
	When sudden stoppage has occurred, do the steps that follow:		
	FREEWHEEL ASSEMBLY		
BHT-407-MM, Chapter 63	1. Remove and examine the freewheel assembly. If the freewheel outer shaft assembly is cut in two, discard the outer shaft, the inner shaft, and the sprag clutch assembly. Put tags on the parts that remain and write, "THIS PART WAS REMOVED FROM SERVICE BECAUSE OF A SUDDEN STOPPAGE." Send the remaining parts to an approved facility for overhaul.		
	2. Do a visual inspection. If you do not find any damage, send the freewheel assembly to an approved facility for overhaul. Follow the special inspection instructions. Put a tag on the freewheel assembly and write, "THIS FREEWHEEL ASSEMBLY WAS REMOVED FROM SERVICE BECAUSE OF A SUDDEN STOPPAGE." During the overhaul, if the approved facility finds that the sprag clutch assembly is damaged (cracked or deformed sprag or cage), discard the outer shaft, the inner shaft, and the sprag clutch assembly.		
BHT-407-MM, Chapter 65	**TAIL ROTOR DRIVESHAFT ASSEMBLIES**		
	1. Examine the tail rotor driveshaft assemblies for condition.		
	2. If the tail rotor driveshaft was damaged by a main rotor strike or has damage other than the torsional overload, discard the damaged segment assembly and the segment assemblies forward-and-aft of the damaged driveshaft. Remove the remaining hanger and bearing assemblies. Put tags on the hanger and bearing assemblies and write, "THIS HANGER AND BEARING ASSEMBLY WAS REMOVED FROM SERVICE BECAUSE OF A SUDDEN STOPPAGE." Send the hanger and bearing assemblies to an approved facility for overhaul.		
	3. If a tail rotor driveshaft fails because of a torsional load, discard all of the tail rotor driveshaft assemblies, the forward short shaft, the aft short shafts, and the fan shaft.		
	4. If the visual inspection showed no sign of damage, the tail rotor driveshaft assemblies are serviceable.		
	OIL COOLER BLOWER IMPELLER		

POST OFFICE BOX 482 • FORT WORTH, TEXAS 76101

Table 1. Sudden Stoppage - Tail Rotor - Power "ON" or "OFF" (continued)

DATA REFERENCE	INSPECTION TASK DESCRIPTION	INITIAL MECH	INITIAL OTHER
	DATE: _____W.O. _____		
	FACILITY: _____		
	HELICOPTER S/N: _____		
	REGISTRY NO.: _____		
	TOTAL TIME:_____		
	SIGNATURE:_____		
BHT-407-MM, Chapter 65	1. Remove and examine the impeller for condition. If you find any damage such as cracks and deformation, discard the impeller, oil cooler blower driveshaft, forward and aft hangers, forward and aft bearings, and the forward and aft disc packs.		
	2. Examine the oil cooler blower housing for condition.		
	3. If there is no damage, the oil cooler impeller is serviceable.		
	TAIL ROTOR GEARBOX ASSEMBLY		
BHT-407-MM, Chapter 65	1. Remove and examine the tail rotor gearbox for condition. If you see any of the following, discard the tail rotor gearbox.		
	1.1. Cracked or distorted housing.		
	1.2. Fractured studs or fractured dowel pins.		
	1.3. Bent or damaged output shaft.		
	2. If there is no damage, put a tag on the tail rotor gearbox and write, "THIS TAIL ROTOR GEARBOX WAS REMOVED FROM SERVICE BECAUSE OF A SUDDEN STOPPAGE." Send the tail rotor gearbox to an approved facility for overhaul.		
	TAIL ROTOR CONTROL SYSTEM		
	1. Examine the tail rotor flight controls for condition and correct operation. Replace all of the damaged parts.		
	2. If you see one or more of the following defects, discard the pitch change mechanism:		
	2.1. Tail rotor hub pitch horn failure.		
BHT-407-MM, Chapter 67	2.2. Control tube bent or broken.		
	2.3. Damaged tail rotor gearbox output shaft.		
	3. Discard all of the rotating control bolts.		
	4. If you do not see any damage after a close visual inspection of the tail rotor control system, the tail rotor flight control is serviceable.		
BHT-407-MM, Chapter 64	**TAIL ROTOR HUB AND BLADE ASSEMBLY**		
	NOTE Depending on the nature of the impact, the tail rotor blade(s) may be serviceable. Please contact Product Support Engineering for information on possible blade evaluation.		
	1. If the sudden stoppage started at the tail rotor hub and blade assembly, discard it.		

POST OFFICE BOX 482 • FORT WORTH, TEXAS 76101

Table 1. Sudden Stoppage - Tail Rotor - Power "ON" or "OFF" (continued)

DATA REFERENCE	INSPECTION TASK DESCRIPTION	INITIAL MECH	INITIAL OTHER
	DATE: _____W.O. _____		
	FACILITY: _____		
	HELICOPTER S/N: _____		
	REGISTRY NO.: _____		
	TOTAL TIME:_____		
	SIGNATURE:_____		
	2. If the sudden stoppage started at the main rotor, the transmission, the tail rotor drive shaft, or at the tail rotor gearbox, look for visible external damage. If you do not see any visible external damage, the tail rotor hub and blade assembly is serviceable. If you see damage on the tail rotor hub and blade assembly, put a tag on the tail rotor hub and blade assembly and write, "THIS TAIL ROTOR HUB AND BLADE ASSEMBLY WAS REMOVED FROM SERVICE BECAUSE OF A SUDDEN STOPPAGE." Send the tail rotor hub and blade assembly to an approved facility for overhaul.		
BHT-407-MM, Chapter 53	**TAILBOOM**		
	CAUTION **ANY CRACK, CORROSION OR LOOSE OR SHEARED RIVET IS CAUSE FOR IMMEDIATE GROUNDING OF THE HELICOPTER UNTIL THE PROBLEM IS CORRECTED.**		
	1. Examine the tail boom for condition:		
	1.1. Internally.		
	1.2. Externally.		
	2. Examine the four tailboom attachment fittings, on the fuselage and on the tailboom, for condition and security. Pay particular attention to the upper left-hand fittings.		
	3. Examine the tail rotor driveshaft supports and their attachment to the tailboom for condition and security.		
	4. Examine the horizontal stabilizer and auxiliary fins for condition and security.		
	5. Examine the vertical fin for condition and security.		
	6. Examine the tailboom area of the tail rotor gearbox mounting studs and dowel pins for cracks. Use a 10X power magnifying glass or do a fluorescent penetrant inspection.		
	7. Check the torque on the nuts of the tailboom attachment bolts.		
	8. Examine the tailboom skin for damage in the area of the tail rotor blade tip path. Repair or replace the damaged area.		
	9. Examine the support yield indicator for damage. If the support yield indicator clearance is decreased, discard the support yield indicator and proceed as follows:		
	9.1. Discard tail rotor yoke.		
	9.2. Inspect tail rotor blades for delamination.		
BHT-407-MM, Chapter 67	9.3. Inspect pitch links for condition.		
BHT-407-MM, Chapter 64	9.4. Inspect pitch horns for condition.		

POST OFFICE BOX 482 • FORT WORTH, TEXAS 76101

Table 1. Sudden Stoppage - Tail Rotor - Power "ON" or "OFF" (continued)

DATA REFERENCE	INSPECTION TASK DESCRIPTION	INITIAL MECH	INITIAL OTHER
	DATE: _____W.O. _____		
	FACILITY: _____		
	HELICOPTER S/N: _____		
	REGISTRY NO.: _____		
	TOTAL TIME:_____		
	SIGNATURE:_____		
	9.5. Inspect tailboom for condition in tail rotor blade tip path area.		
BHT-407-MM, Chapter 18	10. Dynamically balance the tail rotor hub and blade assembly.		

POST OFFICE BOX 482 • FORT WORTH, TEXAS 76101

Conditional Inspections - Main Rotor Overspeed

Procedure

Table 1. Main Rotor Overspeed

DATA REFERENCE	INSPECTION TASK DESCRIPTION	INITIAL MECH	INITIAL OTHER
	DATE: _____W.O. _____		
	FACILITY: _____		
	HELICOPTER S/N: _____		
	REGISTRY NO.: _____		
	TOTAL TIME:_____		
	SIGNATURE:_____		
	MAIN ROTOR OVERSPEED		
	A main rotor overspeed is an incident in which 118% main rotor RPM is exceeded.		
	AFTER OVERSPEED - BELOW 118%		
	1. When a main rotor overspeed below 118% has occurred, no airframe inspection is required.		
Rolls-Royce Engine Operations and Maintenance Manual	2. Do the engine overspeed inspection.		
	AFTER OVERSPEED OF 118% AND ABOVE		
	When a main rotor overspeed of 118% and above has occurred, do the steps that follow:		
BHT-407-MM, Chapter 62	**MAIN ROTOR HUB AND BLADES**		
	1. Examine the blades for condition. If you see any of the following, discard the blade:		
	1.1. Balance weights have moved.		
	1.2. Retention bushings are loose.		
	2. If the blade has any other damage, remove the blade. Put a tag on the blade and write, “THIS BLADE WAS REMOVED FROM SERVICE BECAUSE OF A MAIN ROTOR OVERSPEED.” Send the blade to an approved facility for an analysis.		
	3. If the blade has no damage, the blade is serviceable.		
	4. If you see any yielding of a retention bolt, discard it.		
	5. Examine the main rotor hub for condition. If you see any damage, remove the main rotor hub assembly. Put a tag on the main rotor hub assembly and write, “THIS MAIN ROTOR HUB ASSEMBLY WAS REMOVED FROM SERVICE BECAUSE OF A MAIN ROTOR OVERSPEED.” Send the main rotor hub assembly to an approved facility for overhaul.		
	5.1. If a grip is deformed, discard it.		
	5.2. If the yoke is delaminated, discard it.		
	6. If the main rotor hub has no damage, it is serviceable.		
BHT-407-MM, Chapter 62	7. Examine the main rotor Frahm (if installed, TB 407-03-51) for internal and external damage. If the main rotor Frahm shows signs of damage, remove it. Put a tag on the Frahm and write, “THIS FRAHM WAS REMOVED FROM SERVICE BECAUSE OF A MAIN ROTOR OVERSPEED.” Send it to an approved facility for overhaul. If you do not find any damage, the main rotor Frahm is serviceable.		
	TAIL ROTOR HUB AND BLADE ASSEMBLY		

POST OFFICE BOX 482 • FORT WORTH, TEXAS 76101

Table 1. Main Rotor Overspeed (continued)

DATA REFERENCE	INSPECTION TASK DESCRIPTION	INITIAL MECH	INITIAL OTHER
	DATE: _____W.O. _____		
	FACILITY: _____		
	HELICOPTER S/N: _____		
	REGISTRY NO.: _____		
	TOTAL TIME:_____		
	SIGNATURE:_____		
BHT-407-MM, Chapter 64	1. Examine the tail rotor hub and blade assembly for condition. If you find any of the damage that follows, discard the hub or blade:		
	1.1. Tip block has moved or has a crack		
	1.2. Blade bolt bushing is loose		
	2. If the blade has any other damage, remove the blade. Put a tag on the blade and write, “THIS BLADE WAS REMOVED FROM SERVICE BECAUSE OF A MAIN ROTOR OVERSPEED.” Send the tail rotor blade to an approved facility for analysis.		
	3. Discard the bolts of the tail rotor blade.		
	4. Examine the tail rotor hub assembly for condition. If you see any damage, remove the tail rotor hub assembly. Put a tag on the tail rotor assembly and write, “THE TAIL ROTOR HUB ASSEMBLY WAS REMOVED FROM SERVICE BECAUSE OF A MAIN ROTOR OVERSPEED.” Send the tail rotor hub assembly to an approved facility for overhaul.		
	5. If the tail rotor hub assembly and the tail rotor blades are not damaged, they are serviceable.		
	DRIVE SYSTEM		
BHT-407-MM, Chapter 63, BHT-407-MM, Chapter 63, BHT-407-MM, Chapter 63, and BHT-407-MM, Chapter 65 BHT-407-MM, Chapter 65	1. Examine the chip detectors of transmission, freewheel, and tail rotor gearbox. If there is no unwanted material, the drive system is serviceable. If the chip detector shows signs of unwanted material, remove the applicable component. Put a tag on the applicable component and write, “THIS COMPONENT WAS REMOVED FROM SERVICE BECAUSE OF A MAIN ROTOR OVERSPEED.” Send the applicable component to an approved facility for overhaul.		
	2. Examine the engine to transmission driveshaft, and the complete tail rotor driveshaft for condition and security.		
	3. Use a flashlight and an inspection mirror. Examine the oil cooler impeller for condition.		
Rolls-Royce Engine Operations and Maintenance Manual	4. Do the engine overspeed inspection.		
	5. If you find any damage during the inspection, make sure that you repair it. Make sure that all of the systems are serviceable.		
BHT-407-FM-X	6. Do a ground run for a minimum of one hour with the helicopter light on its skids. Examine the fuel and the oil systems for leaks.		

POST OFFICE BOX 482 • FORT WORTH, TEXAS 76101

Conditional Inspections - Overtorque

Procedure

Table 1. 31.Overtorque

DATA REFERENCE	INSPECTION TASK DESCRIPTION	INITIAL MECH	INITIAL OTHER
	DATE: _____W.O. _____ FACILITY: _____ HELICOPTER S/N: _____ REGISTRY NO.: _____ TOTAL TIME:_____ SIGNATURE:_____		
	OVERTORQUE An overtorque is an incident in which torsional loads greater than those permitted are applied to the helicopter dynamic system.		
	NOTE The torque values given in this section are those displayed by the torque indicator. The FADEC/ECU/EEC will record torque values that are different. Refer to BHT-407-MM, Chapter 95 and Rolls-Royce Engine Operations and Maintenance Manual for the relationship between these two values.		
	AFTER OVERTORQUE - 100 TO 110%		
Rolls-Royce Engine Operations and Maintenance Manual	1. After an overtorque of 100 to 110%, no inspection is required, except for the engine.		
	2. Do an engine overtorque inspection.		
	AFTER OVERTORQUE - 110 TO 120%		
	When a main rotor overtorque has occurred, do the steps that follow:		
BHT-407-MM, Chapter 62	**MAIN ROTOR HUB AND BLADES**		
	1. Examine the blades for condition. If the blade bond is separated at any point on the blade, discard the blade.		
	2. If the blade has no damage, it is serviceable.		
	3. Remove blade bolts and examine. If you see any yielding of a blade bolt, discard it.		
	4. Examine the main rotor hub for condition. If you see any damage, remove the main rotor hub assembly. Put a tag on the main rotor hub assembly and write, “THIS MAIN ROTOR HUB ASSEMBLY WAS REMOVED FROM SERVICE BECAUSE OF AN OVERTORQUE.” Send the main rotor hub assembly to an approved facility for overhaul.		
	4.1. If any grip is deformed, discard it.		
	4.2. If the yoke is delaminated, discard it.		

POST OFFICE BOX 482 • FORT WORTH, TEXAS 76101

Table 1. 31.Overtorque (continued)

DATA REFERENCE	INSPECTION TASK DESCRIPTION	INITIAL	
		MECH	OTH-ER
	4.3. If the elastomeric bearings or the lead-lag damper is separated or crumbled, discard it.		
	4.4. If the elastomeric damper or the lead-lag damper is separated, discard it.		
	5. If the main rotor hub has no damage, it is serviceable.		
	DRIVE SYSTEM AND PYLON MOUNTS		
BHT-407-MM, Chapter 63	1. Examine the chip detectors of the transmission, the freewheel, and the tail rotor gearbox for unwanted material. Make an analysis of the unwanted material. If you find metal particles, remove the applicable component. Put a tag on the applicable component, and write, “THIS COMPONENT WAS REMOVED FROM SERVICE BECAUSE OF A MAIN ROTOR OVERTORQUE.” Send the applicable component to an approved facility for overhaul.		
BHT-407-MM, Chapter 63	2. Remove and examine the engine to transmission driveshaft for deformation and cracks. If deformation or cracks are found, discard the driveshaft.		
	3. Examine the transmission top case and the corner mount attachment points for condition.		
	4. If the transmission is damaged, remove the transmission. Put a tag on the transmission and write, “THIS TRANSMISSION WAS REMOVED FROM SERVICE BECAUSE OF A MAIN ROTOR OVERTORQUE.” Send the transmission to an approved facility for overhaul.		
	NOTE Mast removal for disassembly and Total Indicated Runout (TIR) (runout check) is required, if: Peak torque value reached is 120% or above. Peak torque value reached is 110% or above and air-speed limit of (100 KIAS or placarded Vne per BHT-407-FM-X, Section 1, Flight Manual) in "takeoff power range" was being exceeded during overtorque event. If any abnormal vibrations are detected during return to service after overtorque inspection accomplish-ment, TIR (runout check) will be required.		
BHT-407-MM, Chapter 63	5. Remove mast assembly.		
BHT-407-CRO, Chapter 63, Paragraph 63-7, Component Repair and Overhaul Manual	5.1. Disassemble mast assembly.		
BHT-407-CRO, Chapter 63, Figure 63-12, Component Repair and Overhaul Manual	5.2. Make sure that the mast pole is straight by performing a runout check.		
BHT-407-CRO, Chapter 63, Paragraph 63-21, Component Repair and Overhaul Manual and BHT-407-MM, Chapter 63	5.3. If the mast pole is within allowable TIR, the mast assembly can be returned to service. Assemble the mast assembly. Install mast assembly or return to inventory.		
	5.4. If the mast pole is beyond allowable TIR, remove the mast pole from service. Put a tag on the mast pole and write, “THIS MAST POLE WAS REMOVED FROM SERVICE BECAUSE OF A MAIN ROTOR OVERTORQUE”. Send the mast pole to Bell for additional analysis to determine if the mast pole has sustained torsional yielding.		

POST OFFICE BOX 482 • FORT WORTH, TEXAS 76101

Table 1. 31.Overtorque (continued)

DATA REFERENCE	INSPECTION TASK DESCRIPTION	INITIAL MECH	INITIAL OTH-ER
BHT-407-CRO, Chapter 63, Paragraph 63-6, Component Repair and Overhaul Manual and BHT-407-CRO, Figure 63-3, Component Repair and Overhaul Manual	*5.5. If Bell Textron finds that the mast pole has torsional yielding, discard the mast assembly components, the transmission assembly, the engine to transmission driveshaft, and the freewheel assembly (the outer race, the inner race, and the clutch). Visually inspect the swashplate driving components for damage.*		
	6. Examine the pylon mount for condition. Examine the components that follow:		
BHT-407-MM, Chapter 63	6.1. The corner mounts.		
BHT-407-MM, Chapter 63	6.2. The restraints.		
	6.3. The left and right hand restraint stops.		
BHT-407-MM, Chapter 65	7. Examine the assemblies of the tail rotor driveshaft for condition.		
BHT-407-MM, Chapter 65	8. Examine the torque of the attachment points of the tail rotor gearbox.		
	FLIGHT CONTROLS		
BHT-407-MM, Chapter 67	1. Examine the swashplate and support for condition.		
	2. Examine the boosted main rotor control tubes for damage. Carefully examine the pitch links. Replace all of the damaged parts.		
	STRUCTURE		
BHT-407-MM, Chapter 53	1. Examine the cabin roof and the roof beam at the attachment points of the transmission beam for security and condition.		
	2. Examine the torque of the attaching hardware of the beam to the pylon mounts.		
	TAIL ROTOR HUB AND BLADES		
BHT-407-MM, Chapter 64	1. Examine the tail rotor hub and blade assembly for condition. If you see any damage, remove the tail rotor hub and blade assembly. Remove the tail rotor blades from the hub. Put a tag on the applicable component and write, “THIS COMPONENT WAS REMOVED FROM SERVICE BECAUSE OF A MAIN ROTOR OVERTORQUE.” Send the tail rotor blade to an approved facility for analysis. Send the tail rotor hub to an approved facility for overhaul.		
Rolls-Royce Engine Operations and Maintenance Manual	**POWER PLANT**		
	1. Do an engine overtorque inspection.		
	AFTER THE FIRST 25 FLIGHT HOURS		
	1. Do a visual inspection of the following:		
BHT-407-MM, Chapter 62	1.1. The main rotor hub and blades.		
BHT-407-MM, Chapter 63	1.2. The transmission top case and the attaching hardware.		
BHT-407-MM, Chapter 53	1.3. The roof beam at the transmission mount attachment points.		
BHT-407-MM, Chapter 63	1.4. The transmission corner mounts and the restraint elastomeric bearing.		
BHT-407-MM, Chapter 64	1.5. The tail rotor hub and blades.		
BHT-407-MM, Chapter 63	2. Examine the chip detectors of the transmission, the freewheel and the tail rotor gearbox for unwanted material.		
BHT-407-MM, Chapter 65			

POST OFFICE BOX 482 • FORT WORTH, TEXAS 76101

Table 1. 31.Overtorque (continued)

DATA REFERENCE	INSPECTION TASK DESCRIPTION	INITIAL	
		MECH	OTH-ER
	AFTER OVERTORQUE - ABOVE 120% **NOTE** Follow the overhaul inspection instructions in the specific sections. Use the limit charts and other applicable data. Make sure that the parts in each assembly are within the dimension limits and that they have not yielded or become deformed. When an overtorque has exceeded 120% remove the components that follow. Put a tag on the component and write, “THIS COMPONENT WAS REMOVED FROM SERVICE BECAUSE OF A MAIN ROTOR OVERTORQUE.” Send the component to an approved facility for overhaul.		
BHT-407-MM, Chapter 62	1. Main rotor hub.		
BHT-407-MM, Chapter 63	2. Main rotor mast.		
BHT-407-MM, Chapter 63	3. Main transmission, replace the top case of the main transmission.		
BHT-407-MM, Chapter 63	4. Freewheel assembly.		
BHT-407-MM, Chapter 63	5. Remove and discard the engine to transmission driveshaft assembly.		
BHT-407-MM, Chapter 64 BHT-407-MM, Chapter 65	6. Examine the other components that are listed in the inspection, AFTER OVERTORQUE - 110 TO 120%.		

POST OFFICE BOX 482 • FORT WORTH, TEXAS 76101

Conditional Inspections - Engine Compressor Stall or Surge

Procedure

Table 1. Engine Compressor Stall or Surge

DATA REFERENCE	INSPECTION TASK DESCRIPTION	INITIAL MECH	INITIAL OTH-ER
	DATE: _____W.O. _____ FACILITY: _____ HELICOPTER S/N: _____ REGISTRY NO.: _____ TOTAL TIME:_____ SIGNATURE:_____		
	NOTE An engine compressor stall or surge can be described as a sharp rumble, a series of loud sharp pops, severe engine vibration, or a rapid rise in Measured Gas Temperature (MGT) depending on the severity of stall or surge. When a stall or surge is suspected, follow steps as dictated by reported conditions.		
	NOTE The components removed from the helicopter for evaluation following a compressor stall or surge shall be evaluated as a matched group. The records accompanying each component shall cross-reference part and serial numbers of other drive system components removed for evaluation.		
	1. Obtain a pilot's report of the circumstances related to the suspected compressor stall or surge to determine if it corresponds to one of the following conditions: - If the stall or surge occurred on the ground or in flight at any N_R speed or torque setting and there was no noticeable yaw of the helicopter, do Part I and Part II of this inspection. - If the stall or surge occurred on the ground or in flight at any N_R speed or torque setting and there was a noticeable yaw of the helicopter, do Part I, Part II, and Part III of this inspection.		
	PART I: INVESTIGATE CAUSE OF COMPRESSOR STALL OR SURGE		
	POWER PLANT		
Rolls-Royce Engine Operation and Maintenance Manual	1. Examine the induction fairing for blockage. If the induction fairing is found obstructed, refer to the Rolls-Royce Operation and Maintenance Manual for further maintenance action. If no blockage is found, do step 2.		
	2. Remove the induction fairing and examine the compressor intake area as follows:		
	2.1. Examine the compressor rotor for contamination. If contamination is found, perform a compressor wash. Refer to the Rolls-Royce Operation and Maintenance Manual.		
	2.2. Inspect compressor rotor for foreign object damage in accordance with the Rolls-Royce Operation and Maintenance Manual for proper action.		
	3. If step 1 and step 2 do not reveal an obvious cause for stall or surge, refer to the Rolls-Royce Operation and Maintenance Manual for further maintenance action.		

POST OFFICE BOX 482 • FORT WORTH, TEXAS 76101

Table 1. Engine Compressor Stall or Surge (continued)

DATA REFERENCE	INSPECTION TASK DESCRIPTION	INITIAL MECH	INITIAL OTHER
	NOTE Removal or dismantling of components is not required while performing the following inspection.		
BHT-407-MM, Chapter 71	**PART II: INSPECTION FOR COMPRESSOR STALL OR SURGE WITHOUT NOTICEABLE YAW**		
	DRIVE SYSTEM		
BHT-407-MM, Chapter 63 BHT-407-MM, Chapter 65	1. Examine the chip detectors of the transmission, freewheel assembly, and the tail rotor gearbox. If the chip detector shows signs of metal particles, perform a serviceability check. Components that fail the serviceability check shall be removed. Make an entry on the applicable components Historical Service Record and attach a tag and write, “THIS COMPONENT WAS REMOVED FROM SERVICE BECAUSE OF A COMPRESSOR STALL/SURGE”. Send the component to a Bell Helicopter Textron approved facility for overhaul.		
	2. Examine the tail rotor driveshafts for condition and security of attachment.		
	3. Examine the tail rotor disc pack couplings for cracks or gapping greater than 0.015 inch (0.38 mm).		
	4. Examine the tail rotor steel driveshaft and adapters for structural failure or distortion exceeding specified limits.		
	5. Examine the tail rotor driveshaft segments for condition.		
	6. Examine the oil cooler shaft and forward short shaft for condition.		
	7. Examine the engine-to-transmission main driveshaft for condition.		
	8. If no defects were detected that may have been caused by the compressor stall or surge, all drivetrain components are serviceable.		
	ROTATING CONTROL SYSTEM		
BHT-407-MM, Chapter 67 BHT-407-MM, Chapter 67	1. Examine the swashplate and support assembly, swashplate drive components, the tail rotor pitch change mechanism, and all rotating controls (main and tail). Replace any unserviceable parts as necessary.		
BHT-407-MM, Chapter 64	**TAIL ROTOR HUB AND BLADES**		
BHT-407-CRO, Chapter 64, Component Repair and Overhaul Manual	1. Examine the tail rotor hub assembly for condition. If any damage suspected to be related to the stall or surge is found, remove the tail rotor hub assembly. Make an entry on the Historical Service Record and attach a tag on the tail rotor hub assembly and write, "THIS COMPONENT WAS REMOVED FROM SERVICE BECAUSE OF A COMPRESSOR STALL OR SURGE". Send the hub to a Bell Helicopter Textron approved facility for overhaul.		
BHT-407-MM, Chapter 64	2. Examine the tail rotor blade(s) for condition. If any damage suspected to be related to the stall or surge is found, remove the tail rotor blade(s). Make an entry on the Historical Service Record and attach a tag on the tail rotor blade(s) and write "THIS BLADE WAS REMOVED FROM SERVICE BECAUSE OF A COMPRESSOR STALL OR SURGE". Send the tail rotor blade(s) assembly to a Bell Helicopter Textron approved rotor blade repair facility for further inspection and repair.		
	3. Examine the tail rotor blade bolts for security of attachment. If damage suspected to be related to the stall or surge is found, discard the blade bolts.		
	MAIN ROTOR HUB AND BLADES		

POST OFFICE BOX 482 • FORT WORTH, TEXAS 76101

Table 1. Engine Compressor Stall or Surge (continued)

DATA REFERENCE	INSPECTION TASK DESCRIPTION	INITIAL	
		MECH	OTH-ER
BHT-407-MM, Chapter 62	1. Examine the main rotor blades for damage. Check for wrinkled skin, delamination, deformation, and cracks. 2. If any blade has visible damage suspected to be related to the stall or surge, make an entry on the Historical Service Record and attach a tag on blades and write, "THIS BLADE WAS REMOVED FROM SERVICE BECAUSE OF A COMPRESSOR STALL/SURGE." Send the blade(s) to a Bell Helicopter Textron approved rotor blade repair facility for further inspection and repair. 3. If no defects were detected on any blade, the blade(s) are serviceable. **NOTE** This inspection does not require disassembly or removal from the helicopter. 4. Examine the main rotor hub for condition. If any damage is suspected to be related to the stall or surge, remove the main rotor hub assembly. Make an entry on the Historical Service Record and attach a tag on the main rotor hub and write, "THIS MAIN ROTOR HUB ASSEMBLY WAS REMOVED FROM SERVICE BECAUSE OF A COMPRESSOR STALL/SURGE." Send the component to a Bell Helicopter Textron approved facility for overhaul. 5. If no defects were detected on main rotor hub, the main rotor hub is serviceable. 6. If defects are detected in step 1, step 2, and step 4, perform a main rotor sudden stoppage inspection. **SPECIAL INSPECTION** After 25 hours of operation, examine chip detectors of transmission, freewheel assembly, and tail rotor gearbox. If the chip detector shows signs of metal particles, perform a serviceability check. Components that fail the serviceability check shall be removed. Make an entry on the applicable components Historical Service Record and attach a tag and write “THIS COMPONENT WAS REMOVED FROM SERVICE BECAUSE OF A COMPRESSOR STALL/SURGE”. Send the component to a Bell Helicopter Textron approved facility for overhaul.		
	PART III: INSPECTION FOR COMPRESSOR STALL OR SURGE WITH NOTICEABLE YAW		
BHT-407-MM, Chapter 63	**ENGINE-TO-TRANSMISSION MAIN DRIVESHAFT** 1. Remove and examine the engine-to-transmission main driveshaft for condition. 2. If any damage suspected to be related to the stall or surge, make an entry on the Historical Service Record and attach a tag on the driveshaft and write, “THIS COMPONENT WAS REMOVED FORM SERVICE BECAUSE OF A COMPRESSOR STALL”. Send the driveshaft to Bell Helicopter Textron CPR for evaluation. Refer to IL GEN-04-98. 3. If no defects were detected, return the engine-to-transmission main driveshaft to service.		
BHT-407-CRO, Chapter 63, Component Repair and Overhaul Manual	**TRANSMISSION ASSEMBLY** 1. Remove the transmission input pinion and triplex bearing. 2. Inspect the following gear teeth for scoring and other mechanical damage.		

POST OFFICE BOX 482 • FORT WORTH, TEXAS 76101

Table 1. Engine Compressor Stall or Surge (continued)

DATA REFERENCE	INSPECTION TASK DESCRIPTION	INITIAL	
		MECH	OTH-ER
	2.1. Input pinion gear. 2.2 Main input driven bevel gear. 3. If any damage suspected to be related to the stall or surge is found, make an entry on the Historical Service Record and attach a tag on the transmission assembly and write, “THIS COMPONENT WAS REMOVED FROM SERVICE BECAUSE OF A COMPRESSOR STALL”. Send the component to a Bell Helicopter Textron approved facility for overhaul. 4. If no defects were detected on the gears, the transmission assembly is serviceable.		
BHT-407-CRO, Chapter 65, Component Repair and Overhaul Manual	**TAIL ROTOR GEARBOX** 1. Remove the tail rotor gearbox input pinion. 2. Inspect the following gear teeth for scoring and other mechanical damage. 2.1. Input pinion gear. 2.2. Spiral bevel gear. 3. If any damage suspected to be related to the stall or surge is found, make an entry on the Historical Service Record and attach a tag on the tail rotor gearbox and write, “THIS COMPONENT WAS REMOVED FROM SERVICE BECAUSE OF A COMPRESSOR STALL”. Send the tail rotor gearbox to a Bell Helicopter Textron approved facility for overhaul. 4. If no defects were detected on the gears, the tail rotor gearbox is serviceable.		
BHT-407-MM, Chapter 53	**FUSELAGE** 1. Examine the complete tailboom structure for distortion, buckles, cracks in the skin, and sheared or loose rivets. 2. Inspect tailboom attachment fittings for cracks. 3. Inspect the vertical fin for condition and security of attachment.		
BHT-407-MM, Chapter 63 BHT-407-MM, Chapter 63 BHT-407-MM, Chapter 65 BHT-407-FM-1	**GROUND RUN** 1. Perform a ground run for a minimum of 30 minutes with the helicopter light on its skids. Remove and examine the chip detectors of the transmission assembly, freewheel assembly, and tail rotor gearbox. 2. If any of the chip detectors show signs of metal particles, perform a serviceability check. Components that fail the serviceability check shall be removed. Make an entry on the applicable components Historical Service Record and attach a tag and write, “THIS COMPONENT WAS REMOVED FROM SERVICE BECAUSE OF A COMPRESSOR STALL/SURGE”. Send the component to a Bell Helicopter Textron approved facility for overhaul. 3. If no metal particles were found, the transmission assembly, freewheel assembly, and/or tail rotor gearbox are serviceable.		

POST OFFICE BOX 482 • FORT WORTH, TEXAS 76101

Conditional Inspections - After Lightning Strike

Procedure

Table 1. After Lightning Strike

DATA REFERENCE	INSPECTION TASK DESCRIPTION	INITIAL	
		MECH	OTHER
	DATE: _____W.O. _____ FACILITY: _____ HELICOPTER S/N: _____ REGISTRY NO.: _____ TOTAL TIME:_____ SIGNATURE:_____ **AFTER LIGHTNING STRIKE** Because lightning behavior is difficult to predict, do a full inspection of the helicopter. Lightning damage can show as burn marks, heat discoloration, arc marks, or as small weld marks (where the metal has melted and become solid again). Honeycomb and other composite materials may show signs of delamination. **NOTE** In all instances below, if you find damage in any area, extend the inspection in those areas until you find no more damage. If any component shows signs of arc burns, discard it. Use a magnetometer with a range no larger than ±5 gauss. Put the arrow or the red dot (depending on the magnetometer model) within 0.5 in (12.7 mm) of the component you are checking. Point the arrow at the component. If parts of any component have a reading that is greater than 1 gauss, degauss these components. **GENERAL** 1. When you suspect that the helicopter has received a lightning strike, examine these components for condition. Pay particular attention to the areas around the mounting bolts. 1.1 The main rotor hub blades. 1.2. The transmission and the mast. 1.3. The pylon mount (the corner mounts and the restraints). 1.4. The controls. 1.5. The power plant and mounts. 1.6. The engine to transmission driveshaft and the tail rotor driveshaft. 1.7. The tail rotor gearbox and the attachment of its mounting studs to the tailboom structures. 1.8. The tail rotor hub and blades. 1.9. The external surfaces of the helicopter for signs of arcing. Pay particular attention to the areas that follow: 1.9.1. Between the aft fuselage skin panels and the airframe structure at FS 155.0 and at FS 231.0. 1.9.2. On the vertical fin and on the attaching bolts. 1.9.3. On the horizontal stabilizer and finlet attachment supports. 1.9.4. The tailboom and attachment points. 1.9.5. The landing gear and the attachment points. 1.9.6. If installed, do an inspection of the wire strike protection system (BHT-407-MM, Chapter 53).		

POST OFFICE BOX 482 • FORT WORTH, TEXAS 76101

Table 1. After Lightning Strike (continued)

DATA REFERENCE	INSPECTION TASK DESCRIPTION	INITIAL	
		MECH	OTHER
	1.10. The magnetic compass for accuracy (the degree of the inaccuracy may indicate how dangerous the lightning strike damage is).		
	1.11. The electrical systems.		
	1.12. The avionics equipment.		
BHT-407-MM, Chapter 62	**MAIN ROTOR HUB AND BLADE**		
	When a lightning strike causes damage to the main rotor hub or blades, do the steps that follow:		
	1. Main rotor blades.		
	NOTE If a blade shows signs of arcing, remove the blade. Put a tag on the blade and write, “THIS BLADE WAS REMOVED FROM SERVICE BECAUSE OF A LIGHTNING STRIKE.” Send the blade to an approved facility for analysis.		
	1.1. Inspect the blades for signs of burns and arcing at the tip cap and at the bushings of the blade bolts. Burn marks can be very small.		
	1.2. Examine the main rotor blade for delamination.		
	2. Main rotor hub.		
	2.1. If you see signs of arcing, burning, or delamination, remove the main rotor hub. Put a tag on the main rotor hub and write, “THE MAIN ROTOR HUB WAS REMOVED FROM SERVICE BECAUSE OF A LIGHTNING STRIKE.” Send the main rotor hub to an approved facility for overhaul. If a component shows signs of arcing or delamination, discard it.		
	2.2. If you do not see signs of arcing, the main rotor hub is serviceable.		
BHT-407-MM, Chapter 62	3. Main rotor Frahm (if installed, TB 407-03-51).		
	3.1. If you see signs of arcing, burning, or delamination, remove the main rotor Frahm. Put a tag on the main rotor Frahm and write, “THE MAIN ROTOR FRAHM WAS REMOVED FROM SERVICE BECAUSE OF A LIGHTNING STRIKE.” Send the main rotor Frahm to an approved facility for overhaul. If a component shows signs of arcing or delamination, discard it.		
	3.2. If you do not see signs of arcing, the main rotor Frahm is serviceable.		
	MAIN ROTOR CONTROLS		
BHT-407-MM, Chapter 67	1. Inspect all fixed and rotating control components and bearings for arcing, burning, heat discoloration, welding, or other indications of lightning damage. For components with indications of lightning damage, inspect any bearings for smooth operation and the component for any damage. If damage is evident, remove supports and inspect mounting holes and mating surfaces for arcing damage. Blend out any damage to twice its visible depth. Do not exceed any damage or repair limits for the part. Replace any bearings with evidence of damage. If bearing cannot be replaced, replace the entire part.		
	SWASHPLATE		
BHT-407-MM, Chapter 67	1. Remove the swashplate assembly. Put a tag on the swashplate assembly and write, “THIS SWASHPLATE ASSEMBLY WAS REMOVED FROM SERVICE BECAUSE OF A LIGHTNING STRIKE.” Send the swashplate assembly to an approved facility for overhaul. If a part shows signs of arcing, discard it.		

POST OFFICE BOX 482 • FORT WORTH, TEXAS 76101

Table 1. After Lightning Strike (continued)

DATA REFERENCE	INSPECTION TASK DESCRIPTION	INITIAL	
		MECH	OTHER
BHT-407-MM, Chapter 63	**TRANSMISSION AND MAST ASSEMBLY**		
BHT-407-MM, Chapter 63	1. Remove the mast assembly. Disassemble it and examine for condition as follows: 1.1. Examine all of the components for signs of arc burns. Pay particular attention to the bearing ring raceways. 1.2. If you do not see arc burns and if you do not find arc burns on any main rotor or on any main rotor control component, then the mast assembly is serviceable. You do not have to inspect the transmission. 1.3. If you see arc burns on the mast assembly, on the main rotor, or on a main rotor component, then remove the transmission and mast assembly. Put a tag on the transmission and mast assembly and write, “THIS TRANSMISSION AND MAST ASSEMBLY WAS REMOVED FROM SERVICE BECAUSE OF A LIGHTNING STRIKE.” Send the transmission and mast assembly to an approved facility for overhaul. 1.4. If the transmission and mast assembly are serviceable, then after 5 to 10 hours of operation, remove and inspect the chip detectors and filter. If an abnormal amount of unwanted material is found, remove the transmission and mast assembly. Put a tag on the transmission and mast assembly and write, “THIS TRANSMISSION AND MAST ASSEMBLY WAS REMOVED FROM SERVICE BECAUSE OF A LIGHTNING STRIKE.” Send the transmission and mast assembly to an approved facility for overhaul.		
BHT-407-MM, Chapter 63	**MAIN DRIVESHAFT ASSEMBLY**		
	1. If you find arc burns in the transmission, discard the engine to transmission driveshaft assembly.		
BHT-407-MM, Chapter 63	**FREEWHEEL**		
	1. If you did not find arc burns on the transmission assembly or on any component of the tail rotor driveshaft, then the freewheel is serviceable. You do not have to inspect the freewheel.		
BHT-407-MM, Chapter 63	2. If you find arc burns on the transmission assembly or on any component of the tail rotor driveshaft, then remove the freewheel. Put a tag on the freewheel and write, “THIS FREEWHEEL WAS REMOVED FROM SERVICE BECAUSE OF A LIGHTNING STRIKE.” Send the freewheel to an approved facility for overhaul.		
	3. If the freewheel is serviceable, then after 5 to 10 hours of operation, remove and inspect the chip detector and filter, if applicable. If an abnormal amount of unwanted material is found, remove the freewheel. Put a tag on the freewheel and write, “THIS FREEWHEEL WAS REMOVED FROM SERVICE BECAUSE OF A LIGHTNING STRIKE.” Send the freewheel to an approved facility for overhaul.		
BHT-407-MM, Chapter 65	**TAIL ROTOR DRIVESHAFT**		
	1. Disassemble all of the driveshafts.		
	2. Examine all of the components of the driveshafts for signs of arc burns. If you find signs of arc burns on any one component, discard all the drive shafts (except for the oil cooler impeller and housing assembly).		
	3. Examine the oil cooler impeller for condition. If you see signs of arc burns on it, discard the oil cooler impeller.		
BHT-407-MM, Chapter 64	**TAIL ROTOR GEARBOX**		

Table 1. After Lightning Strike (continued)

DATA REFERENCE	INSPECTION TASK DESCRIPTION	INITIAL	
		MECH	OTHER
	1. If you do not see any signs or arc burns on any tail rotor, tail rotor pitch change component, or tail rotor driveshaft component, then you do not have to inspect the tail rotor gearbox assembly. 2. If you see signs of arc burns on any tail rotor, tail rotor pitch change component, or tail rotor driveshaft component, then remove the tail rotor gearbox. Put a tag on the tail rotor gearbox and write, “THIS TAIL ROTOR GEARBOX WAS REMOVED FROM SERVICE BECAUSE OF A LIGHTNING STRIKE.” Send the tail rotor gearbox to an approved facility for overhaul. 3. If the tail rotor gearbox is serviceable, then after 5 to 10 hours of operation, remove and inspect the chip detector. If you see signs of unwanted material, then remove the tail rotor gearbox. Put a tag on the tail rotor gearbox and write, “THIS TAIL ROTOR GEARBOX WAS REMOVED FROM SERVICE BECAUSE OF A LIGHTNING STRIKE.” Send the tail rotor gearbox to an approved facility for overhaul.		
BHT-407-MM, Chapter 64	**TAIL ROTOR HUB AND BLADE ASSEMBLY** Whenever a lightning strike causes damage to the tail rotor hub and blades, perform steps that follow: 1. Tail rotor blades. **NOTE** If a blade shows signs of arcing, remove blade. Put a tag on blade and write, "THIS BLADE WAS REMOVED FROM SERVICE BECAUSE OF A LIGHTNING STRIKE." Send blade to an approved facility for analysis. 1.1. Inspect blades for signs of burns and arcing at tip cap and bushings of blade bolts. Burn marks can be very small. 1.2. Examine tail rotor blade for delamination. 2. Tail rotor hub assembly. 2.1. If tail rotor hub assembly shows signs of arcing, discard it.		
BHT-407-MM, Chapter 67	**TAIL ROTOR FLIGHT CONTROL** 1. Examine the pitch link for condition. It you see signs of arcing, discard the pitch link. 2. Examine the cross head and the control rod of the pitch change mechanism. If you see damage because of a lightning strike, discard the cross head. Put a tag on the pitch change mechanism and write, “THIS PITCH CHANGE MECHANISM WAS REMOVED FROM SERVICE BECAUSE OF A LIGHTNING STRIKE.” Send the pitch change mechanism to an approved facility for overhaul. If a part shows signs of arcing discard it.		
BHT-407-MM, Chapter 96 BHT-407-MM, Chapter 97	**ELECTRICAL AND AVIONICS** Make sure that the electrical systems and the avionics equipment operate correctly and that they show no signs of a lightning strike. If a system does not operate correctly or if you see signs of a lightning strike do the steps that follow: 1. Do an operational check of the system. 2. Do a Voltage Standing Wave Ratio (VSWR) check on all of the antennas, the antenna cables, and the connectors.		

POST OFFICE BOX 482 • FORT WORTH, TEXAS 76101

Table 1. After Lightning Strike (continued)

DATA REFERENCE	INSPECTION TASK DESCRIPTION	INITIAL	
		MECH	OTHER
Rolls-Royce Engine Operations and Maintenance Manual Transient Voltage Suppressor (TVS) BHT-407-MM, Chapter 96	**POWER PLANT** Do an engine lightning strike inspection. SN: 54304, 54567, 54805-Subsequent: 1. Do the visual inspection of the Transient Voltage Suppressor (TVS) (407GXi). SN: 54304, 54567, 54805-Subsequent: 2. Do the functional check of the Transient Voltage Suppressor (TVS) (407GXi).		

POST OFFICE BOX 482 • FORT WORTH, TEXAS 76101

Intentionally blank page

POST OFFICE BOX 482 • FORT WORTH, TEXAS 76101

Conditional Inspections - Strike Impact to Auxiliary Finlets by Main Rotor Blades

Procedure

Table 1. Strike Impact to Auxiliary Finlets by Main Rotor Blades

DATA REFERENCE	INSPECTION TASK DESCRIPTION	INITIAL	
		MECH	OTHER
	DATE: _____W.O. _____		
	FACILITY: _____		
	HELICOPTER S/N: _____		
	REGISTRY NO.: _____		
	TOTAL TIME:_____		
	SIGNATURE:_____		
	STRIKE IMPACT TO AUXILIARY FINLETS BY MAIN ROTOR BLADES		
	A strike impact to the auxiliary finlets by main rotor blades is any incident in which a main rotor blade collides with either one or both auxiliary finlets and leaves a noticeable damage to either a main rotor blade or an auxiliary finlet.		
	When a strike impact has occurred, do the steps that follow:		
	1. MAIN ROTOR BLADES		
BHT-407-MM, Chapter 62	Examine if a main rotor blade has contacted the tail rotor driveshaft cover. If the tail rotor driveshaft cover is damaged, do the conditional inspections listed in SUDDEN STOPPAGE – MAIN ROTOR – POWER “ON” OR “OFF”. If not, do the steps that follow:		
	1.1. Examine the main rotor blades for damage. Closely examine the area for wrinkled skin and delamination.		
BHT-407-MM, Chapter 53	*1.2. If damage to a blade cannot be repaired per (BHT-407-MM, Chapter 53), remove it. Put a tag on the blade and write,” THIS BLADE WAS REMOVED FROM SERVICE BECAUSE OF STRIKE IMPACT TO AUXILIARY FINLETS”. Send the remaining blades to an approved facility for repair.*		
	1.3. If you do not find any damage on a blade, the blade is serviceable.		
	2. AUXILIARY FINLETS		
BHT-407-MM, Chapter 53	*If auxiliary finlets are damaged from a main rotor strike, remove and do the steps that follow:*		
	2.1. Examine the doublers on either side of each auxiliary finlet for voids and/or visible deformation. If a doubler has a void and/or is deformed, discard the auxiliary finlet and the horizontal stabilizer.		
	2.2. If the upper end of the finlets have strike damage and the doublers have no void and/or no visible deformation, put a tag on the auxiliary finlet and write, THIS AUXILIARY FINLET WAS REMOVED FROM SERVICE BECAUSE OF STRIKE IMPACT FROM A MAIN ROTOR BLADE”. Fill a structural repair request per IL GEN-04-96 or BHT-ALL-SRM, Chapter 2, Structural Repair Manual and forward to Product Support Engineering for a repair evaluation.		
	3. HORIZONTAL STABILIZER		
BHT-407-MM, Chapter 53	*3.1. If an auxiliary finlet is damaged due to a main rotor strike, remove the horizontal stabilizer and do the steps that follow:*		
	3.2. Examine the external surface for skin deformation, bucking, or cracks.		
	3.3. Examine all inserts for looseness and bond condition.		
	3.4. Examine the end fitting fasteners for condition.		

POST OFFICE BOX 482 • FORT WORTH, TEXAS 76101

Table 1. Strike Impact to Auxiliary Finlets by Main Rotor Blades (continued)

DATA REFERENCE	INSPECTION TASK DESCRIPTION	INITIAL	
		MECH	OTHER
BHT-407-MM, Chapter 53	*3.5. Remove damaged finlets and do an Eddy current inspection to its adjacent end fitting of the horizontal stabilizer. If one of the end fitting fails the Eddy current inspection, discard the horizontal stabilizer.*		
BHT-407-MM, Chapter 53	*3.6. If the end fitting has no damages but the damage to the horizontal stabilizer more than the repairs described in* BHT-407-MM, Chapter 53*, put a tag on it and write, THIS HORIZONTAL STABILIZER WAS REMOVED FROM SERVICE BECAUSE OF STRIKE IMPACT FROM A MAIN ROTOR BLADE TO THE FINLETS". Fill a structural repair request per IL GEN- 04-96 or BHT-ALL-SRM, Chapter 2, Structural Repair Manual and forward to Product Support Engineering for a repair evaluation.*		
	4. TAILBOOM		
	4.1. Examine if all closing plates and support angles of horizontal stabilizer for deformation or cracks.		
BHT-407-MM, Chapter 53	4.2. Examine the tailboom skin aperture for horizontal stabilizer for waviness, deformation, bucking, or cracks. If the damage to the skin is beyond the repairs described in BHT-407-MM, Chapter 53, put a tag to the tailboom and write, "THIS TAILBOOM WAS REMOVED FROM SERVICE BECAUSE OF STRIKE IMPACT FROM MAIN ROTOR BLADE TO THE FINLETS". Fill a structural repair request per IL GEN-04-96 or BHT-ALL-SRM, Chapter 2, Structural Repair Manual and forward to Product Support Engineering for repair evaluation.		

POST OFFICE BOX 482 • FORT WORTH, TEXAS 76101

Component Interim Inspection Schedule - Description

The Component Interim Inspection Schedule (Table 1) provides the interim inspection time interval for each applicable helicopter component.

WARNING

DO NOT APPLY TOLERANCES TO PARTS WITH A LIMITED AIRWORTHINESS LIFE (407-A-04-00-00-00A-288A-A / 00010).

NOTE

Refer to 407-A-05-00-00-04A-028A-A / 00017 for information on inspection tolerance.

On the Component Interim Inspection Schedule, examine the components every 60 months or 72 months of component operation.

Table 1. Component Interim Inspection Schedule

NOMENCLATURE	PART NUMBER (1) TIME BETWEEN INTERIM INSPECTION
Spring Link Assembly	407-001-331-103 (4) 60 months
Mast Assembly	407-040-011-101 (2) *72 months*
Transmission	407-040-006-103 (2) *72 months*
Transmission	407-040-007-103 (2) 72 months
Freewheel	406-040-500-123 (2) *72 months*
Tail Rotor Gearbox	406-040-400-115 (3) *72 months*

NOTES:

1 The time specified between an interim inspection for any part number applies to all successive dash numbers for that component, unless differently noted.

2 Refer to BHT-407-MM, Chapter 63.

3 Refer to BHT-407-MM, Chapter 65.

4 Refer to BHT-407-MM, Chapter 67.

POST OFFICE BOX 482 • FORT WORTH, TEXAS 76101

Intentionally blank page

POST OFFICE BOX 482 • FORT WORTH, TEXAS 76101

Component Overhaul Schedule - Description

The Component Overhaul Schedule (Table 1) provides the time interval between overhaul for each applicable helicopter component.

WARNING

DO NOT APPLY THESE TOLERANCES TO PARTS/COMPONENTS WITH A LIMITED AIRWORTHINESS LIFE (407-A-04-00-00-00A-288A-A / 00010).

WARNING

DO NOT EXCEED RETIREMENT LIFE FOR CRITICAL COMPONENTS. REFER TO AIRWORTHINESS LIMITATIONS SCHEDULE (407-A-04-00-00-00A-288A-A / 00010).

SOME PARTS/COMPONENTS INSTALLED AS ORIGINAL EQUIPMENT ON MILITARY HELICOPTERS MAY HAVE A LOWER AIRWORTHINESS LIFE AND/OR OVERHAUL SCHEDULE THAN WHEN USED ON A COMMERCIAL HELICOPTER. CONSEQUENTLY, PARTS/COMPONENTS THAT HAVE BEEN USED ON MILITARY HELICOPTERS SHOULD NOT BE USED ON COMMERCIAL HELICOPTERS.

CAUTION

OVERHAUL SCHEDULE FOR SOME KIT COMPONENTS AND/OR PARTS IS NOT COVERED IN THIS SCHEDULE. REFER TO APPLICABLE MAINTENANCE MANUAL SUPPLEMENT FOR KIT COMPONENTS SCHEDULE.

NOTE

Refer to 407-A-05-00-00-04A-028A-A / 00017 for information on overhaul tolerance.

NOTE

Neither assignment of a time period for overhaul of a component or failure to assign a time period for overhaul of a component constitutes a warranty of any kind. The only warranty applicable to helicopter and any component is that warranty included in the Purchase Agreement for the helicopter or component.

The overhaul interval specified for any given part number contained in this Component Overhaul Schedule applies to all successive dash numbers (or suffixes) for that item unless differently noted.

Table 1. Component Overhaul Schedule

NOMENCLATURE	PART NUMBER (1)	OVERHAUL INTERVAL (HOURS)
	MAIN ROTOR HUB	
Hub Assembly	407-010-100-103	2500 hours
Blade Bolt	406-010-120-101	(13) 2500 hours
	MAIN ROTOR CONTROLS	
Swashplate and Support	406-010-401-115	2500 hours
	DRIVE SYSTEM	
Input Driveshaft	206-340-300-107	(3) 1250 hours
Rotor Brake Disc	206-340-301-101	SN: 53000-53442 Drive Train Modification Kit: Not Installed: (5) 3000 hours
Rotor Brake Caliper	206-340-301-103	SN: 53000-53442 Drive Train Modification Kit: Not Installed: (5) 1800 hours
Freewheel	406-040-500-123	(14) *3000 hours*
Transmission	407-040-006-103/-107	(2) 2500 hours
Transmission	407-040-006-111	(2) 4500 hours

POST OFFICE BOX 482 • FORT WORTH, TEXAS 76101

Table 1. Component Overhaul Schedule (continued)

NOMENCLATURE	PART NUMBER (1)	OVERHAUL INTERVAL (HOURS)
Transmission	407-040-006-115/-123/-127	5000 hours
Transmission	407-040-007-103	6000 hours
Mast Assembly	407-040-011-101	2500 hours
Rotor Brake Caliper	407-340-302-101	: 53443-53631 TB 407-05-67: Pre: (6) 1800 hours
Rotor Brake Caliper	407-340-302-101FM	SN: 53000-53442 Drive Train Modification Kit: Installed: (7) 1800 hours
Rotor Brake Caliper	407-340-302-103	SN: 53632-Subsequent: (8) 3000 hours
Input Driveshaft	407-340-310-101	(4) 2500 hours
Rotor Brake Disc	407-340-318-101	(SN: 53000-53442 Drive Train Modification Kit: Installed) or SN: 53443-Subsequent: (11) (12) 12,000 hours
Rotor Brake Caliper	407-540-304-101FM	: 53000-53631 TB 407-05-63: Post TB 407-05-67: Post: (9) 3000 hours
Rotor Brake Caliper	427-340-352-113	3600 hours
TAIL ROTOR SYSTEM		
Tail Rotor Gearbox	406-040-400-115/-117/-117FM	(10) 2500 hours
Tail Rotor Gearbox	406-040-400-119	5000 hours
Tail Rotor Hub	407-012-101-107	2500 hours
POWER PLANT		
Engine	250-C47B 250-C47B/8 250-C47E/4	Refer to Rolls-Royce Engine Operations and Maintenance Manual
ELECTRICAL		

POST OFFICE BOX 482 • FORT WORTH, TEXAS 76101

Table 1. Component Overhaul Schedule (continued)

NOMENCLATURE	PART NUMBER (1)	OVERHAUL INTERVAL (HOURS)
Starter-generator	206-062-200-113/-147	1000 hours

NOTES:

1 The operating time specified for overhaul of any given part number listed applies to all successive dash numbers (or suffixes) for that component, unless differently noted.

2 As identified in TB 407-04-60, a 4500-hour overhaul applies to transmission 407-040-006-107 if modified per TB 407-03-41, and transmission 407-040-006-111 and subsequent.

3 Input driveshaft 206-340-300-107 must be overhauled every 1250 hours of operation. Overhaul is to be accomplished by Kamatics Corporation only. Return driveshaft to Bell Textron (BT) per Information Letter (IL) GEN-04-98. Refer to 407-A-04-00-00-00A-288A-A / 00010 for retirement life.

4 Input driveshaft 407-340-310-101 must be overhauled every 2500 hours of operation. Overhaul is to be accomplished by Kamatics Corporation only. Return driveshaft to Bell Textron (BT) per Information Letter (IL) GEN-04-98.

5 SN: 53000-53442 Drive Train Modification Kit: Not Installed:
Refer to Northwest Dynamics Document No. B0223-OM for overhaul instructions (BHT-407-CR&O-V).

6 : 53443-53631 TB 407-05-67: Pre:
Refer to Northwest Dynamics Document No. B0223-OM for overhaul instructions (BHT-407-CR&O-V).

7 SN: 53000-53442 Drive Train Modification Kit: Installed:
Refer to Northwest Dynamics Document No. B0223-OM for overhaul instructions (BHT-407-CR&O-V).

8 SN: 53632-Subsequent:
Refer to Northwest Dynamics Document No. B0223-OM4 for overhaul instructions (BHT-407-CR&O-V).

9 : 53000-53631 TB 407-05-63: Post TB 407-05-67: Post:
Refer to Northwest Dynamics Document No. B0223-OM4 for overhaul instructions (BHT-407-CR&O-V).

10 As identified in TB 407-04-60, a 5000-hour overhaul applies to tail rotor gearboxes 406-040-400-117/-117FM that have been modified per TB 407-00-21 and TB 407-01-31, Part I or Part II, and gearboxes 406-040-400-119 and subsequent.

11 (SN: 53000-53442 Drive Train Modification Kit: Installed) or SN: 53443-Subsequent:
Refer to Northwest Dynamics Document No. B0223-OM4 or B0244-OM for overhaul instructions (BHT-407-CR&O-V).

12 When disc is installed as inertia weight (rotor brake kit not installed), no overhaul is required for the disc.

13 Blades bolts must be Magnetic Particle Inspection (MPI) at main rotor hub overhaul (BHT-407-CR&O).

14 *Freewheel clutch 406-040-580-103 must be replaced at each overhaul.*

POST OFFICE BOX 482 • FORT WORTH, TEXAS 76101

Intentionally blank page

POST OFFICE BOX 482 • FORT WORTH, TEXAS 76101

Appendix A - M407 Inspection - Checklist

Table 1. Appendix A

M407 INSPECTION - CHECKLIST
GENERAL
1. Make sure that all of the applicable and the required Scheduled Inspections, Special Inspections, Technical Bulletins, Alert Service Bulletins, and Airworthiness Directives (A.D.) are completed:
2. Make sure that the required inspections and the tests for installed optional equipment are completed:
3. Make sure that the required Special Inspections are completed. Refer to the applicable chapter of this manual or to the Maintenance Manual Supplement:
4. Replace all of the life limited components that have completed their specified operating life (407-A-04-00-00-00A-288A-A / 00010):
5. Remove and overhaul all of the components that have completed their specified operating life. Refer to the Component Overhaul Schedule (407-A-05-10-00-02A-281A-A / 00049).
6. If an instrument shows an Exceedance, conduct the required inspection and make sure that there is a log book entry for this instrument:

POST OFFICE BOX 482 • FORT WORTH, TEXAS 76101

Intentionally blank page

POST OFFICE BOX 482 • FORT WORTH, TEXAS 76101

Appendix B - M407 Inspection - Defect Sheet

Table 1. Appendix B

M407 INSPECTION - DEFECT SHEET

Review the logbook for defects and exceedances. Correct the defects on the installed equipment. Correct and make a record of the defect(s) that you identified during this inspection. For any equipment with a defect: if this equipment is not required under the current operating conditions and is not on the Master Minimum Equipment List (MMEL) , you can remove it for repair.

DEFECT:

CORRECTION:

DEFECT:

CORRECTION:

DEFECT:

CORRECTION:

DEFECT:

CORRECTION:

DEFECT:

CORRECTION:

POST OFFICE BOX 482 • FORT WORTH, TEXAS 76101

Intentionally blank page