A Textron Company

ALERT SERVICE BULLETIN **412-23-195**

14 September 2023

MODEL AFFECTED: **412/412EP**

SUBJECT: **TENSION ROD ASSEMBLY P/N 212-030-170-007, INSPECTION OF.**

HELICOPTERS AFFECTED: **Serial numbers 33001 through 33213, 34001 through 34036, 36001 through 36704, 37002 through 37054, 39101 through 39117 and 39119.**

[Serial numbers 36705 through 36999, 37055 through 37999, 39118, 39120 through 39999 will have the intent of this bulletin accomplished prior to delivery.]

COMPLIANCE: **PART I:** Within the next 300 flight hours or 90 days whichever comes first after the release date of this bulletin.

PART II or III as applicable: Within the next 600 flight hours or 12 months whichever comes first after accomplishment of **PART I**.

DESCRIPTION:

Bell has found that tension rod assembly 212-030-170-007 may have been over trimmed during installation to eliminate a fouling condition between the rod ends and the attaching structure. It is also possible that in some cases, the rod ends have not been trimmed sufficiently to obtain proper clearance.

PART I of this bulletin mandates a one-time inspection of the tension rod assembly installation. Low clearance condition between the tension rod assembly rod ends and the attaching structure and/or over trimming of the rod end(s) will require accomplishment of **PART II** or **PART III** of this bulletin, as applicable.

PART II provides instructions for replacing the tension rod assembly if a rod end has been trimmed beyond allowable limits.

PART III provides instructions to rework either the tension rod end or attaching structure if a low clearance condition exists.

APPROVAL:

The engineering design aspects of this bulletin are FAA approved for FAA certified helicopters as listed in the applicable Type Certificate Data Sheet. For non FAA certified helicopters, the engineering design aspects of this bulletin are Bell Engineering approved.

CONTACT INFO:

For any questions regarding this bulletin, please contact:

Bell Product Support Engineering
Tel: 1-450-437-2862 / 1-800-363-8023 / productsupport@bellflight.com

MANPOWER:

Approximately 0.5 man-hour is required to accomplish **PART I** of this bulletin, 3.5 man-hours to accomplish **PART II** and 2 man-hours to accomplish **PART III**. This estimate is based on hands-on time and may vary with personnel and facilities available.

WARRANTY:

There is no warranty credit applicable for parts or labor associated with this bulletin.

MATERIAL:

Required Material:
The following material is required for the accomplishment of this bulletin and may be obtained through your Bell Supply Center.

Part Number	Nomenclature	Qty (Note)
212-030-170-007A	Tension rod assembly	1 (1, 2)

Notes:

1. Required only if tension rod assembly has been over trimmed.
2. This Tension rod assembly contain rod ends with pilot holes in lieu of full-size holes.

Consumable Material:

The following material is required to accomplish this bulletin, but may not require ordering, depending on the operator's consumable material stock levels. This material may be obtained through your Bell Supply Center.

Part Number	Nomenclature	Qty (Note)	Reference *
2100-00345-00	Chemical film (Alodine)	A/R	C-100
2230-00559-00	Primer, Epoxy Polyamide	A/R	C-204 (1)

* C-XXX numbers refer to the consumables list in the BHT-ALL-SPM, Standard Practices Manual

NOTE 1: Waterborne Epoxy Primer (C-246) may be use as an alternate.

SPECIAL TOOLS:

None required.

WEIGHT AND BALANCE:

Not affected.

ELECTRICAL LOAD DATA:

Not affected.

REFERENCES:

BHT-412-IPB Illustrated Parts Breakdown, Chapter 53.
BHT-412-MM Maintenance Manual, Chapter 53.

PUBLICATIONS AFFECTED:

None affected.

ACCOMPLISHMENT INSTRUCTIONS:

-NOTE-

For tension rod assembly removal and installation instructions, refer to the BHT-412-MM, Chapter 53.

PART I: Tension rod assembly inspection.

1. Prepare the helicopter for maintenance and gain access to the tension rod assembly.

CAUTION

Prior to removal of the tension rod assembly attachment bolts, ensure the tailboom is properly supported.

2. Inspect the forward end (upper attachment location) of the tension rod assembly as follows:

   a. Inspect the outboard side of the tension rod assembly rod end for a possible over trimmed condition. Minimum acceptable radius dimension measured from the bolt hole center is 0.360 inch (9.14 mm) edge distance (E.D.) (Figure 1). Removal of the attachment bolt may be required to perform this measurement. Record findings.

   b. Check for fouling or low clearance conditions between the rod end and the structure (cap, web, angle). Minimum acceptable clearance is 0.020 inch (0.51 mm) (Figure 1). Record findings.

3. Inspect the aft end (lower attachment location) of the tension rod assembly as follows:

   a. Inspect both sides of the tension rod assembly rod end for a possible over trimmed condition. Minimum acceptable radius dimension measured from the bolt hole center is 0.360 inch (9.14 mm) edge distance (E.D.) (Figure 2 and 3). Removal of the attachment bolt may be required to perform this measurement. Record findings.

   b. Check for fouling or low clearance conditions between the rod end and the structure (cap, web) on the outboard side and the fillet radius on the inboard side of the fitting. Minimum acceptable clearance is 0.020 inch (0.51 mm) (Figures 2 and 3). Record findings.

4. Following the inspections performed in steps 2 and 3, accomplish one of the following actions:

   a. If no over trimmed condition were found and there are no low clearance or fouling conditions, make an entry in the helicopter logbook and historical service records indicating findings and compliance with this Alert Service Bulletin.

   b. If one or both rod ends have been over trimmed, accomplish **PART II**.

   c. If no over trim conditions were found but there is a fouling or a low clearance condition, accomplish **PART III.**

PART II: Installation of a new tension rod assembly.

CAUTION

Prior to removal of the tension rod assembly attachment bolts, ensure the tailboom is properly supported.

1. Remove the tension rod assembly.

-NOTE-

It is acceptable to remove material from the rod ends and/or the structure attachment locations to comply with inspection criteria defined in **PART I** (Figures 4, 5 and 6).

-NOTE-

The pilot holes in the new tension rod assembly may not match with the bolt holes in the removed tension rod assembly. Fabrication of a work aid to properly locate the bolt holes on the new tension rod assembly is recommended.

2. Using the information from Figure 8 as a guide, fabricate a work aid that can precisely locate the holes on the new tension rod assembly. The work aid material is at the discretion of the operator.

   a. Transfer two 0.249 to 0.251 inch (6.32 to 6.38 mm) diameter holes from the removed tension rod assembly to the work aid (Figure 8 and 9).

CAUTION

Prior to drilling holes on tension rod assembly, ensure the inspection criteria defined in **PART I** for the tension rod assembly are respected (Figures 4, 5 and 6).

   b. Drill the two 0.249 to 0.251 inch (6.32 to 6.38 mm) diameter holes in the rod ends of the new piloted tension rod assembly from the work aid (Figure 8 and 9).

3. Install the new tension rod assembly, do a fit check, and mark the minimum material removal required on both rod ends and/or the structure at the required locations to obtain the required clearance.

4. Trim and deburr previously marked material on the affected rod end and/or structure. Ensure the inspection criteria defined in **PART I** are respected (Figures 4, 5 and 6).

5. After rework, apply chemical film (C-100) and one coat of epoxy polyamide primer (C-204) to the reworked area.

6. Install the tension rod assembly.

7. Make an entry in the helicopter logbook and historical service records indicating compliance with this Alert Service Bulletin.

PART III: Rework of tension rod assembly and/or structure.

CAUTION

Prior to removal of the tension rod assembly attachment bolts, ensure the tailboom is properly supported.

1. If a fouling or a low clearance condition exists, the tension rod assembly may have been incorrectly installed. Prior to trimming the rod ends, remove the tension rod assembly and try different orientations by rotating and/or switching ends to obtain the best possible fit (Figure 7). If proper clearance dimensions as defined in **PART I** cannot be met, proceed with step 3.

2. If it is established that the root cause of the fouling or low clearance condition is the incorrect installation of the tension rod assembly, reinstall correctly and proceed with step 8.

-NOTE-

It is acceptable to remove material from the rod ends and/or the structure attachment fittings provided the inspection criteria defined in **PART I** are respected (Figures 4, 5 and 6).

3. Reinstall tension rod assembly and mark the minimum material removal required on the affected rod end and/or or structure attachment points to obtain the required clearance.

CAUTION

Prior to removal of the tension rod assembly attachment bolts, ensure the tailboom is properly supported.

4. Remove the tension rod assembly.

5. Trim and deburr previously marked material on the affected rod end and/or structure attachment fitting. Ensure the inspection criteria defined in **PART I** are respected (Figures 4, 5 and 6).

6. Apply chemical film (C-100) and one coat of epoxy polyamide primer (C-204) to the reworked area.

7. Install the tension rod assembly.

8. Make an entry in the helicopter logbook and historical service records indicating compliance with this Alert Service Bulletin.

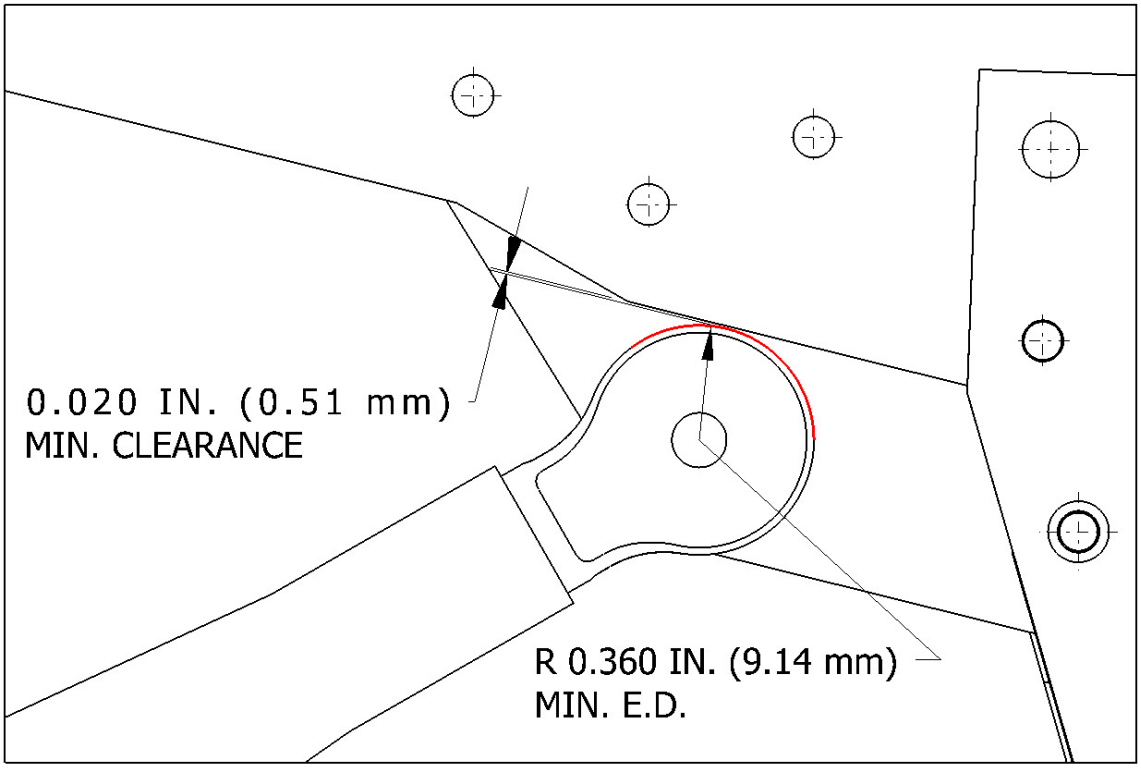

LOOKING INBOARD ON UPPER ATTACHMENT
Figure 1. Inspection requirements.

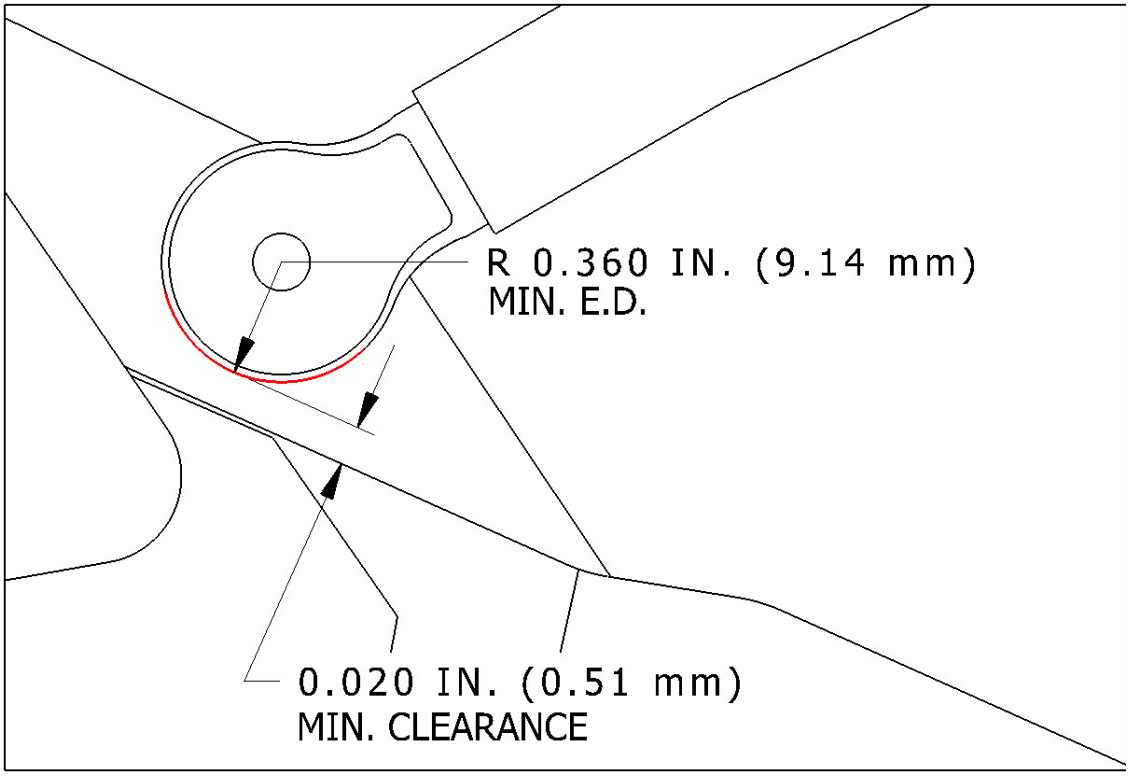

LOOKING INBOARD ON LOWER ATTACHMENT
Figure 2. Inspection requirements.

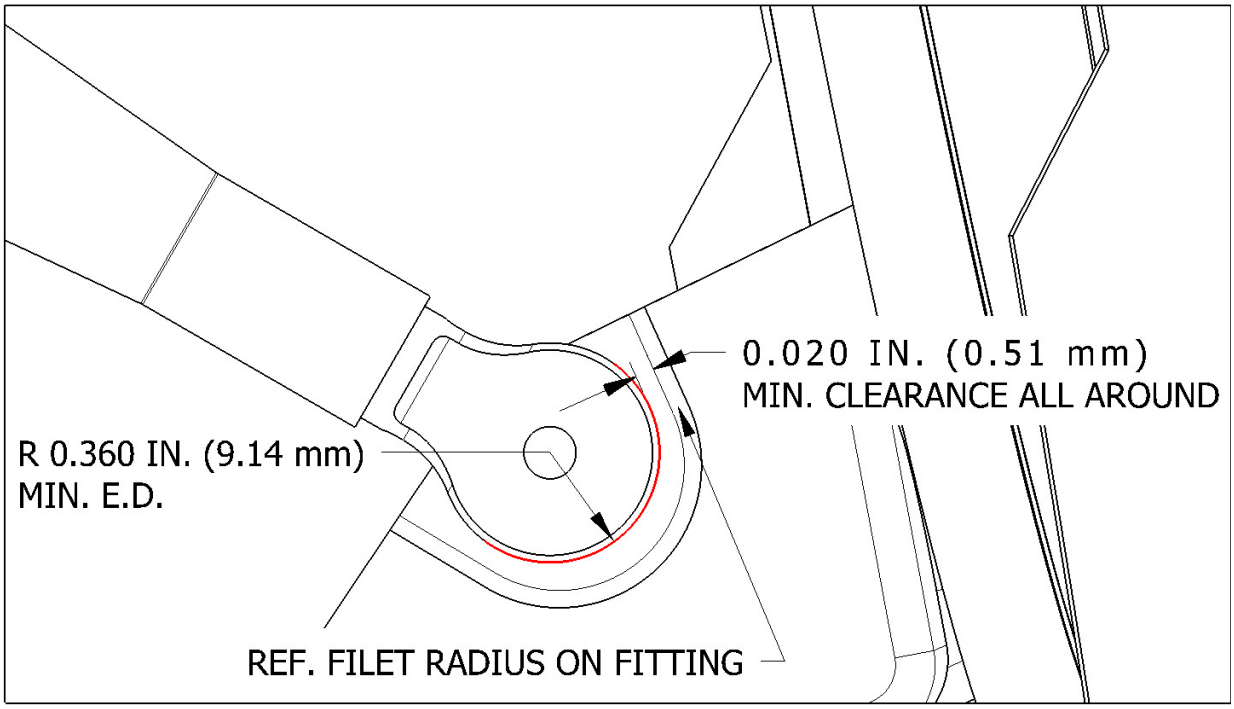

LOOKING OUTBOARD ON LOWER ATTACHMENT
Figure 3. Inspection requirements.

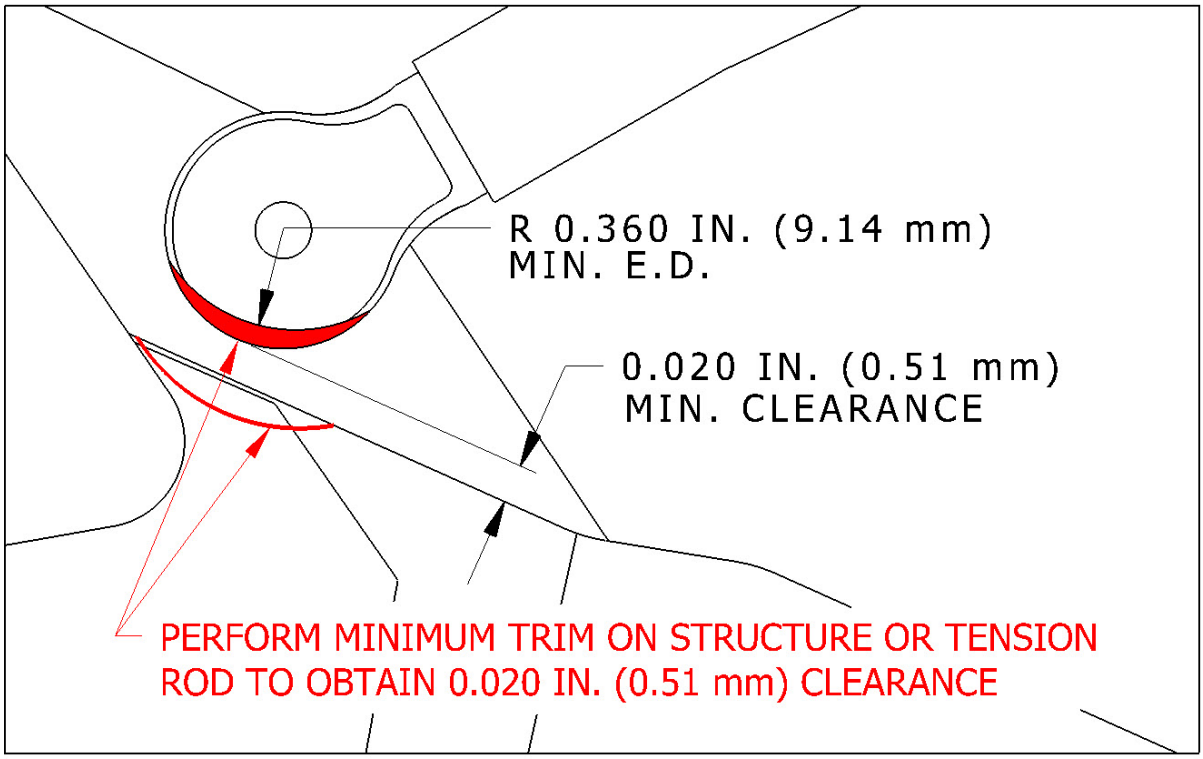

LOOKING INBOARD ON LOWER ATTACHMENT

Figure 4. Rework requirements.

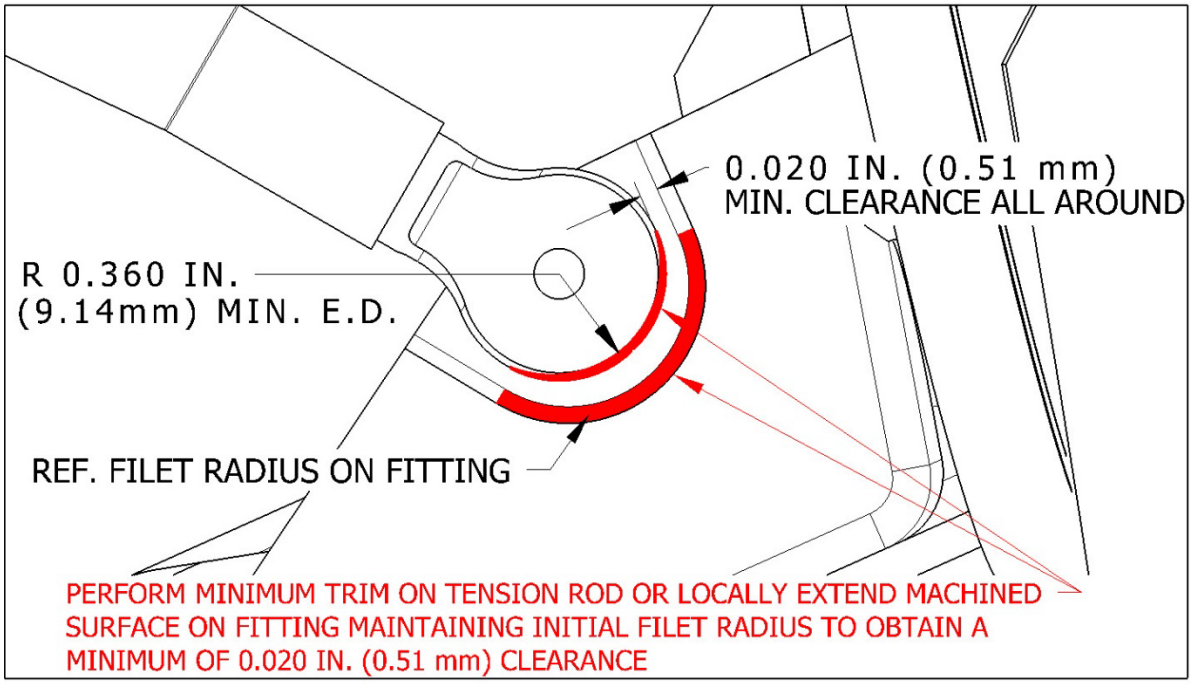

LOOKING OUTBOARD ON LOWER ATTACHMENT

Figure 5. Rework requirements.

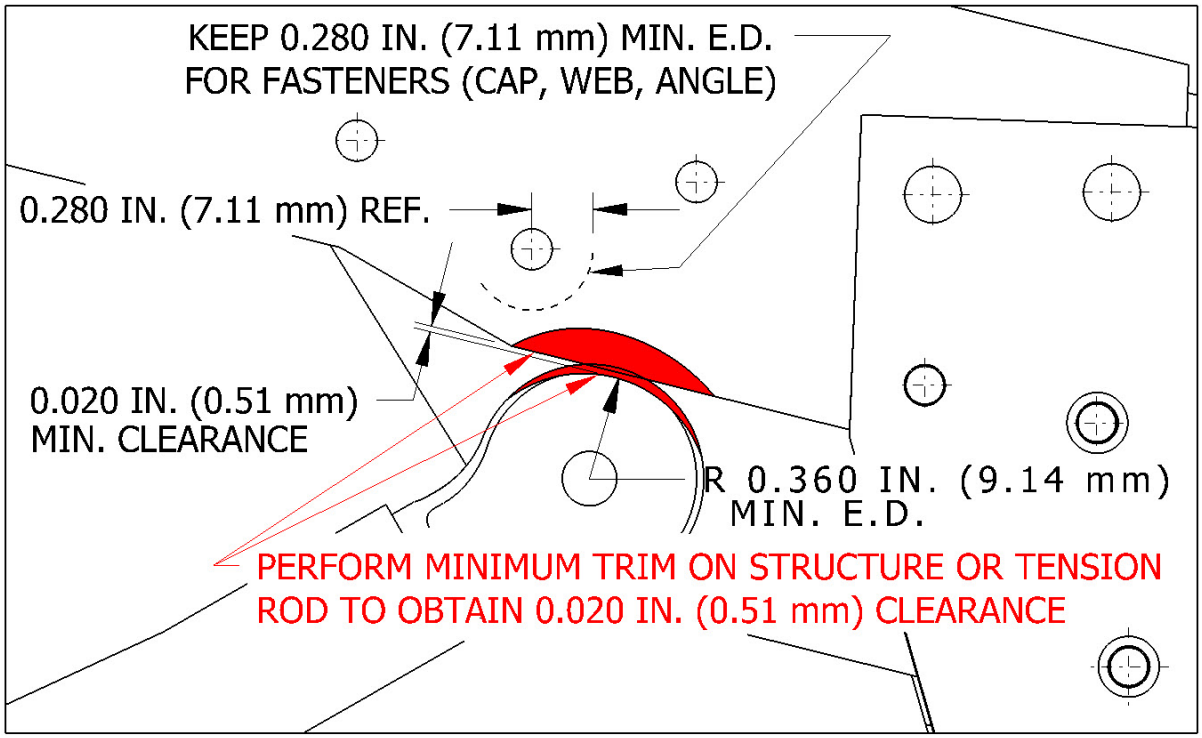

LOOKING INBOARD ON UPPER ATTACHMENT

Figure 6. Rework requirements.

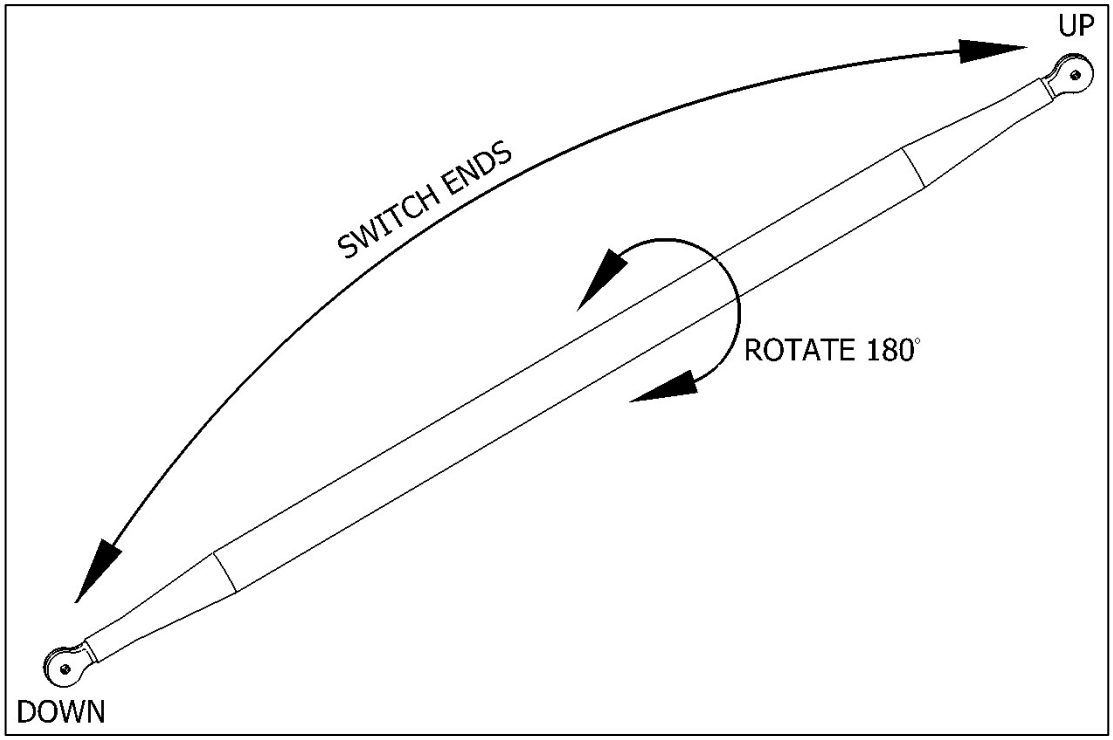

Figure 7. Tension rod assembly proper installation verification.

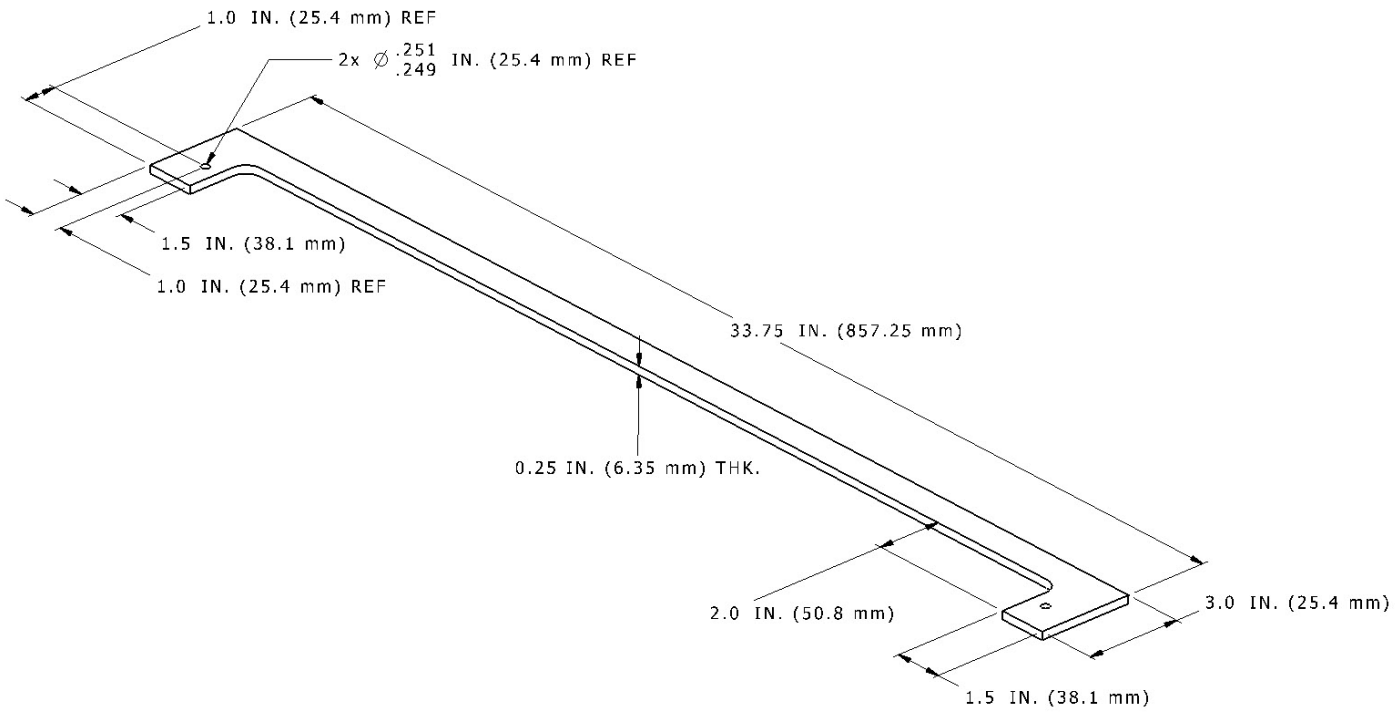

Figure 8. Work aid detail.

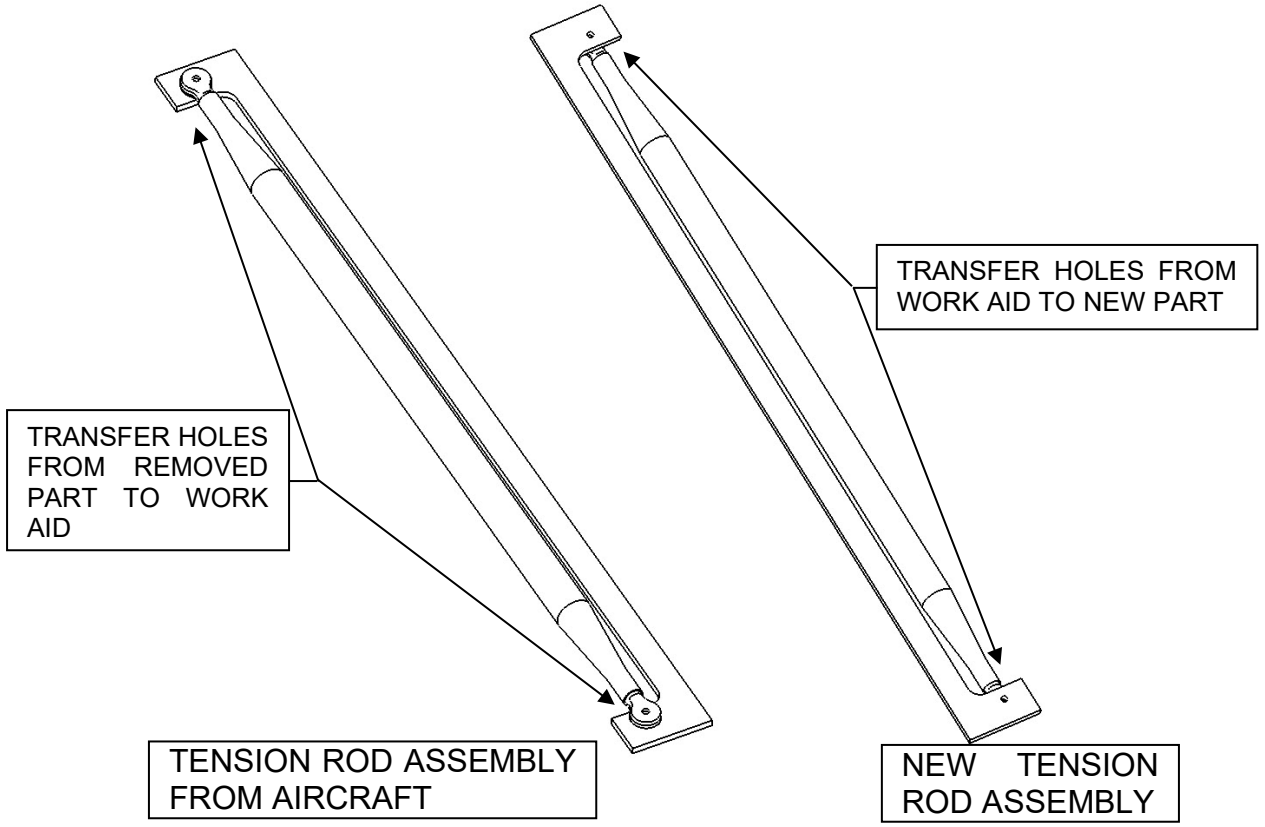

Figure 9. Work aid usage.