A Textron Company

**TECHNICAL BULLETIN** **429-25-72**

7 April 2025

Revision A, 17 March 2026

**MODEL AFFECTED:** **429**

**SUBJECT:** **KEEL BEAM IMPROVED CORROSION PREVENTION, INTRODUCTION OF**

**HELICOPTERS AFFECTED:** **Serial numbers 57001 through 57562, 57574, 57575, 57581 and 57582.**

[Serial number 57563 through 57573, 57576 through 57580, 57583 and subsequent will have the intent of this bulletin accomplished prior to delivery.]

**COMPLIANCE:** At customer's option.

**DESCRIPTION:**

Bell has implemented changes to the Model 429 keel beams and sidebody assemblies to improve the corrosion resistance of the Keel Beams between fuselage stations 159.00 and 238.90. This bulletin provides instructions to add new drain holes and enlarge the existing ones. Additionally, it also provides instructions to apply a layer of polyurethane coating to the keel beams surfaces.

**Revision A** of this bulletin introduces a change to the Helicopters Affected section to include aircraft equipped with Wheeled Landing Gear. Additionally, Bell was made aware that the drilling of the drain hole at STA 218.66 on the right sidebody panel could potentially create a double hole with a wiring harness passage hole if the cargo hook kit 429-706-009 provisions are installed. Even if the double hole condition does not exist, the proximity of the two holes is too close and needs to be remedied. Because of these two potential scenarios the bulletin at this revision has been split into two parts.


Approved for public release.

**Part I:** This part is for helicopters with or without the cargo hook kit provisions and that have not yet complied with the intent of the original release of this bulletin. Figure 1 was updated to change the location of one drain hole, which was originally at STA 218.66 and is now at STA 221.25 on the right sidebody panel.

**Part II**: This part is for helicopters with or without the cargo hook kit provisions and that have accomplished the intent of the original release of this bulletin. This part provides a structural repair to rout the drain and wire passage holes and patch the enlarged cutout. Once the repair has been completed, the drain hole will be re-located to STA 221.25 and the wire passage hole can be re-drilled in accordance with Installation Instruction 429-II-3. Compliance with **Part II** is optional if the cargo hook provisions are not installed. However, **Part II** shall be completed before the cargo hook kit provisions are installed.

**APPROVAL:**

The engineering design aspects of this bulletin are Transport Canada Civil Aviation (TCCA) approved.

**CONTACT INFO:**

For any questions regarding this bulletin, please contact:

Bell Product Support Engineering
Tel: 1-450-437-2862 / 1-800-363-8023 / productsupport@bellflight.com

**MANPOWER:**

Approximately 8 man-hours are required to complete **Part I** of this bulletin. Approximately 6 man-hours are required to complete **Part II** of this bulletin. This estimate is based on hands-on time and may vary with personnel and facilities available.

**WARRANTY:**

There is no warranty credit applicable for parts or labor associated with this bulletin.

**MATERIAL:**

**Required Material:**

None required

**Consumable Material:**

The following material is required to accomplish this bulletin, but may not require ordering, depending on the operator's consumable material stock levels. This material may be obtained through your Bell Supply Center.

| Part Number | Nomenclature | Qty (Note) | Reference * |
|---|---|---|---|
| 2230-00357-00 | Coating, Polyurethane. color code 17925 (White) per AMS-STD-595. | 2 GAL (1) | C-245 |
| 2010-00082-00 | Sealant-654 SEMKIT PS870 A-2 | 6 OZ (1) | C-251 |
| 2100-00006-00 | Cleaning Compound | 5 GAL (1) | C-318 |
| 2230-00425-00 | Primer, Epoxy Polyamide | 1 PT (1) | C-204 |
| 2000-06383-00 | Tape, Masking | 1 ROLL (1) | C-426 |
| 5530-60870-00 | Paper, Masking | 1 ROLL (1) | C-420 |
| 2110-00010-00 | Aliphatic Naphtha | 1 GAL (1) | C-305 |
| 2000-01022-00 | Adhesive | 1 PT (1) | C-317 |
| 2620-06090-01 | Carbon Fabric | As required | C-255 |
| Commercial | Flashbreaker 1 Tape | As required | C-462 |
| Commercial | Abrasive Paper | As required | C-406 |
| 2000-03178-00 | Adhesive | 1 PT (1) | C-363 |
| 2620-06049-00 | Glass Cloth | 3 SQ FT (1) | C-404 |

* C-XXX numbers refer to the consumables list in the BHT-ALL-SPM, Standard Practices Manual

**NOTE 1:** Quantity indicated is the format that the product is delivered in. Actual quantity required to accomplish the instructions in this bulletin may be less.

**SPECIAL TOOLS:**

None required.

**WEIGHT AND BALANCE:**

Not affected.

**ELECTRICAL LOAD DATA:**

Not affected.

**REFERENCES:**

ALL-SPM, Standard Practices Manual, Chapter 4
ALL-SRM, Structural Repair Manual, Chapter 4
ELEC-SPM, Electrical Standard Practices Manual, Chapter 6
429-MM, Maintenance Manual, Chapter 53

**PUBLICATIONS AFFECTED:**

None affected.

## ACCOMPLISHMENT INSTRUCTIONS:

**Part I – Helicopters with or without cargo hook kit provisions that have not complied with the original release of this bulletin.**

1. Prepare the helicopter for maintenance.

2. Remove access covers 200BL and 200BR (DMC-429-A-53-00-00-12A-520A-A).

3. Remove access covers 300AL and 300AR (DMC-429-A-53-00-00-14A-520A-A).

4. Remove access covers 300BL and 300BR (DMC-429-A-53-00-00-15A-520A-A).

**CAUTION**

In order to avoid damaging the keel beam, ensure there is sufficient clearance prior to drilling the holes through the sidebody.

5. Add three new drain holes to the left sidebody as follows:

   a. Mark the location of the three new drain holes as shown in Figure 1.

   b. Drill three 0.375 inch (9.53 mm) holes through the sidebody. (ALL-SRM, Chapter 4).

6. Enlarge three existing drain holes on the left sidebody as follows:

   a. At three locations shown in Figure 1, enlarge the existing 0.250 inch (6.35 mm) holes to a diameter of 0.375 inch (9.53 mm) (ALL-SRM, Chapter 4).

7. Add three new drain holes to the right sidebody as follows:

   a. Mark the location of the new drain holes as shown in Figure 1.

   b. Drill three 0.375 inch (9.53 mm) holes through the sidebody (ALL-SRM, Chapter 4).

8. Enlarge three existing drain holes on the right sidebody as follows:

   a. At three locations shown in Figure 1, enlarge the existing 0.250 inch (6.35 mm) holes to a diameter of 0.375 inch (9.53 mm) (ALL-SRM, Chapter 4).

-NOTE-

The following instructions are provided for the keel beam assembly on the left side. The instructions are the same for the keel beam assembly on the right side.

9. Prepare the surfaces of the keel beam for paint as follows:

   a. Remove sealant at the junction between the sidebody and keel beam (Figure 2, Section A-A).

   b. Thoroughly clean the areas to be painted (Figure 2) using cleaning compound (C-318). Make sure that no contaminants or Corrosion Preventive Compound (CPC) remains.

   c. Inspect the keel beam and ensure there is no mechanical damage or corrosion.

   d. Very lightly abrade the primed surfaces using 400 grit sandpaper.

   e. Remove any sanding residue and degrease surfaces using aliphatic naphtha (C-305).

-NOTE-

If polyurethane coating (C-245) is to be applied to the primer touch-ups 8 hours or more after its application, prepare the areas in accordance with steps 9.c and 9.d.

-NOTE-

The polyurethane coating (C-245) layer on the surfaces of the keel beam shall be uniform and primer must not be visible through the coating.

10. Apply polyurethane coating (C-245) to the keel beam as follows:

    a. Using tape (C-426) and paper (C-420) as required, mask around areas to be painted (Figure 2).

    b. Touch-up any missing primer (C-204) on the surfaces of the keel beam. Allow primer (C-204) to dry for a minimum of 1 hour.

    c. Apply polyurethane coating (C-245) on the surfaces of the keel beam. Coating thickness to be 0.0016 to 0.0024 inch (0.041 to 0.061 mm).

11. Once polyurethane coating (C-245) is fully cured, fillet seal the junction between the

sidebody and keel beam using sealant (C-251) (Figure 2, Section A-A).

12. Install access covers 300BL and 300BR (DMC-429-A-53-00-00-15A-720A-A).

13. Install access covers 300AL and 300AR (DMC-429-A-53-00-00-14A-720A-A).

14. Install access covers 200BL and 200BR (DMC-429-A-53-00-00-12A-720A-A).

15. Make an entry in the helicopter logbook and historical service records indicating compliance with **Part I** this Technical Bulletin.

**Part II – Helicopters with or without the cargo hook kit provisions that have complied with the original release of this bulletin.**

1. Remove access cover 300BR (DMC-429-A-53-00-00-15A-520A-A).

2. If the cargo hook kit provisions are installed, remove the electrical provisions as follows:

   a. Remove the screws (1, Figure 3) and the bracket assembly cover (2) from the cargo hook bracket assembly (3).

   b. Remove wires M009C16 and M010C16 (4) from receptacle 2580J1 (5) (DMC-429-A-96-00-00-55A-921A-A), (DMC-429-A-98-00-00-80D-051A-A) and (ELEC-SPM, Chapter 6).

   c. Remove the wires (4) from the wire passage hole.

   d. Remove the grommet (6).

**CAUTION**

In order to avoid damaging the keel beam, ensure there is sufficient clearance prior to drilling the holes through the sidebody.

3. Relocate the drain hole at STA 218.66 as follows by drilling a 0.375 inch (9.53 mm) hole at STA 221.25 (Figure 3) (ALL-SRM, Chapter 4).

4. Enlarge the drain hole at STA 218.66 into an elliptic cutout as follows:

   a. Rout the elliptic cutout as shown in Figure 3, View B (ALL-SRM, Chapter 4).

   b. Sand the elliptic cutout to smooth the edge (ALL-SRM, Chapter 4). Ensure that no loose fibers remain.

   c. Inspect the edge of the elliptic cutout to ensure that there are no voids and no delamination.

5. Fill the elliptic cutout as follows:

   a. Prepare a mixture of adhesive (C-317), and chopped carbon fabric (C-255) as follows:

      (1) Chop the carbon fibers (C-255) approximately 0.125 inch (3.18m) long.

      (2) Mix 30% by weight of chopped carbon fiber (C-255) with the adhesive (C-317).

   b. Apply tape (C-462) on one side of the sidebody and apply the adhesive mixture to fill the elliptic cutout.

   c. Allow the adhesive mixture to cure for 24 hours at room temperature.

   d. Remove the tape (C-462).

**CAUTION**

Be careful not to sand in the carbon fiber plies.

   e. Sand the adhesive flush with the outboard and inboard sides of the sidebody.

6. Prepare the bonding surfaces on both sides of the sidebody (ALL-SRM, Chapter 4).

7. Cut four pieces of glass cloth to the dimensions specified in **Table 1**

**Table 1 – Ply Specifications**

| Ply | Dimensions | Material | Orientation | Location |
|---|---|---|---|---|
| 1 | 4.25 inches (108.0 mm) by 2.07 inches (52.6 mm) | C-404 | Optional | Inboard sidebody |
| 2 | 2.75 inches (69.9 mm) by 1.57 inches (39.9 mm) | C-404 | Optional | Inboard sidebody |
| 3 | 2.75 inches (69.9 mm) by 1.72 inches (43.7 mm) | C-404 | Optional | Outboard sidebody |
| 4 | 4.25 inches (108.0 mm) by 2.22 inches (56.4 mm) | C-404 | Optional | Outboard sidebody |

8. On the inboard side, prepare the wet layup with plies 1 and 2 and adhesive (C-363). Refer to Figure 3, View C for position and stack up.

9. On the outboard side, prepare the wet layup with plies 3 and 4 and adhesive (C-363). Refer to Figure 3, View C for position and stack up.

10. Let the wet layup cure (ALL-SRM, Chapter 4).

**CAUTION**

Be careful not to over sand into the plies of the repair and sidebody.

11. Once cured, lightly sand the excess adhesive to achieve a smooth contour (ALL-SRM, Chapter 4).

12. Do a tap test of the repaired area.

13. Refinish the repaired area (ALL-SPM, Chapter 4)

14. If the cargo hook kit provisions are installed, install the electrical provisions as follows:

    a. Locate and drill the cargo hook wire passage hole (429-II-3).

    b. Install the gromet (5) (429-II-3).

    c. Route the wires (4) through the wire passage hole.

    d. Install wires M009C16 and M010C16 (4) into receptacle 2580J1 (5) (DMC-429-A-96-00-00-55A-921A-A), (DMC-429-A-98-00-00-80D-051A-A) and (ELEC-SPM, Chapter 6).

    e. Install the bracket assembly cover (2) on the cargo hook bracket assembly (3) with screws (1).

15. Install access cover 300BR (DMC-429-A-53-00-00-15A-720A-A).

16. Make an entry in the helicopter logbook and historical service records indicating compliance with **Part II** of this Technical Bulletin

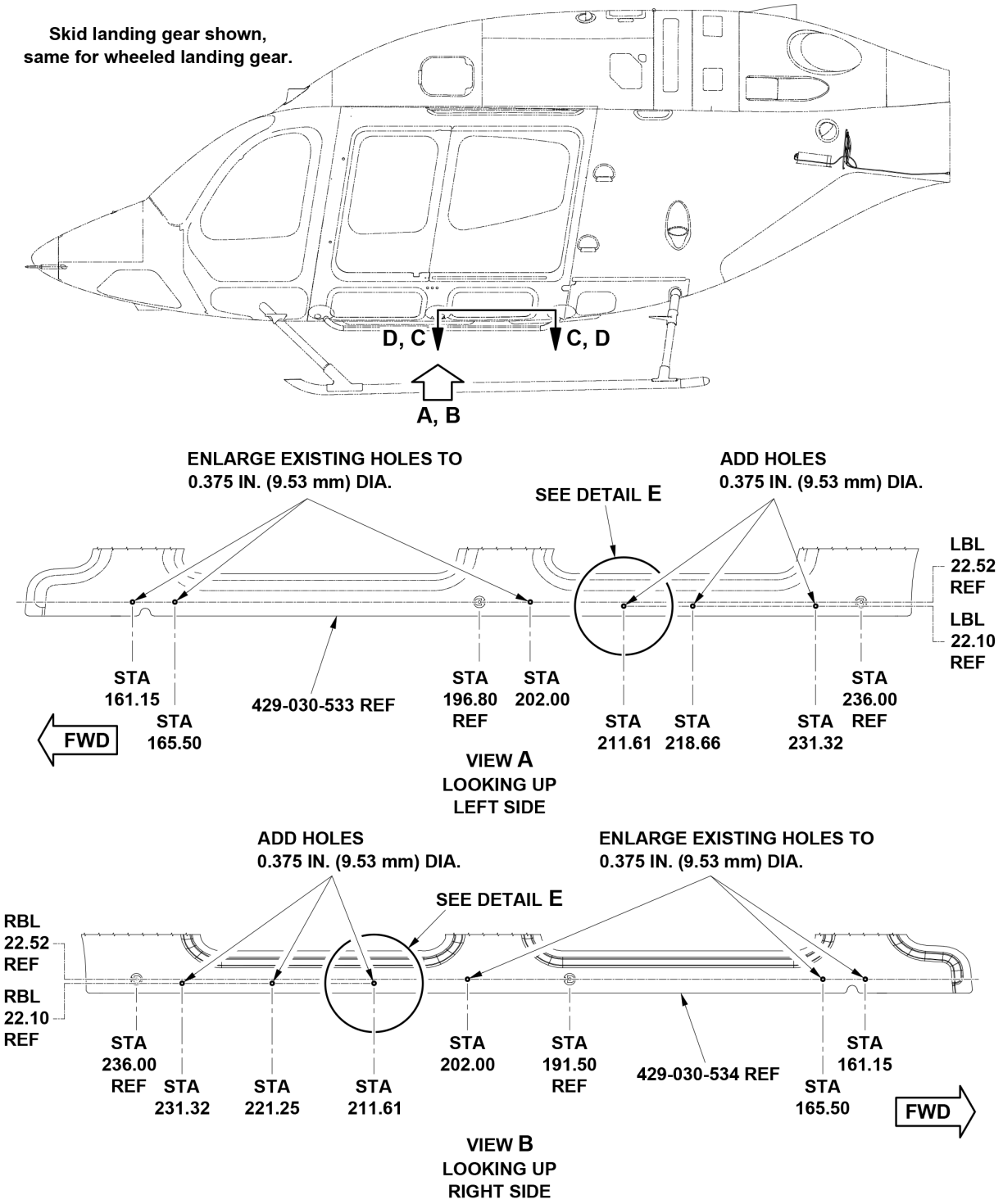


**Figure 1 (Sheet 1 of 3) – Sidebody Drain Holes**

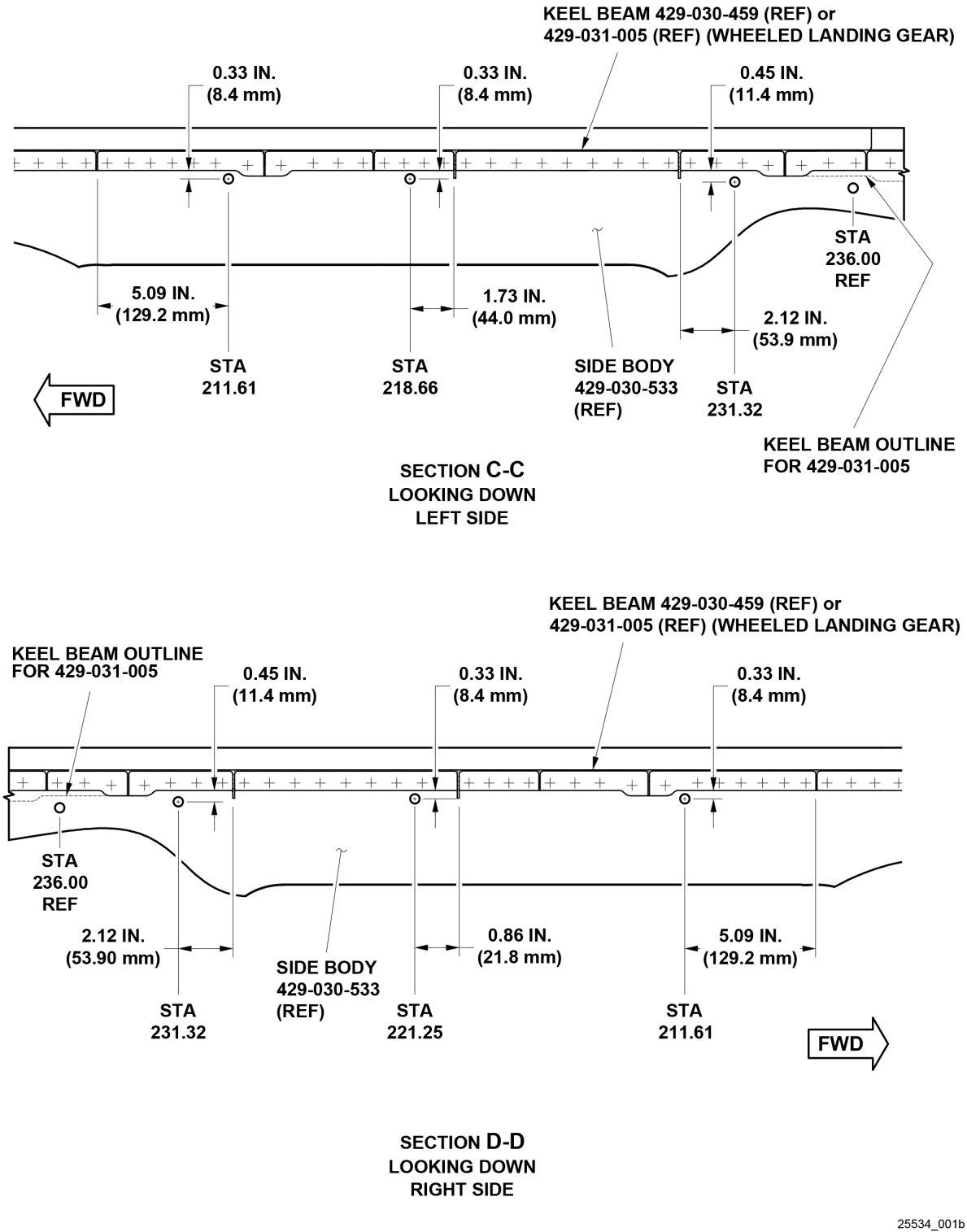


**Figure 1 (Sheet 2 of 3) – Sidebody Drain Holes**

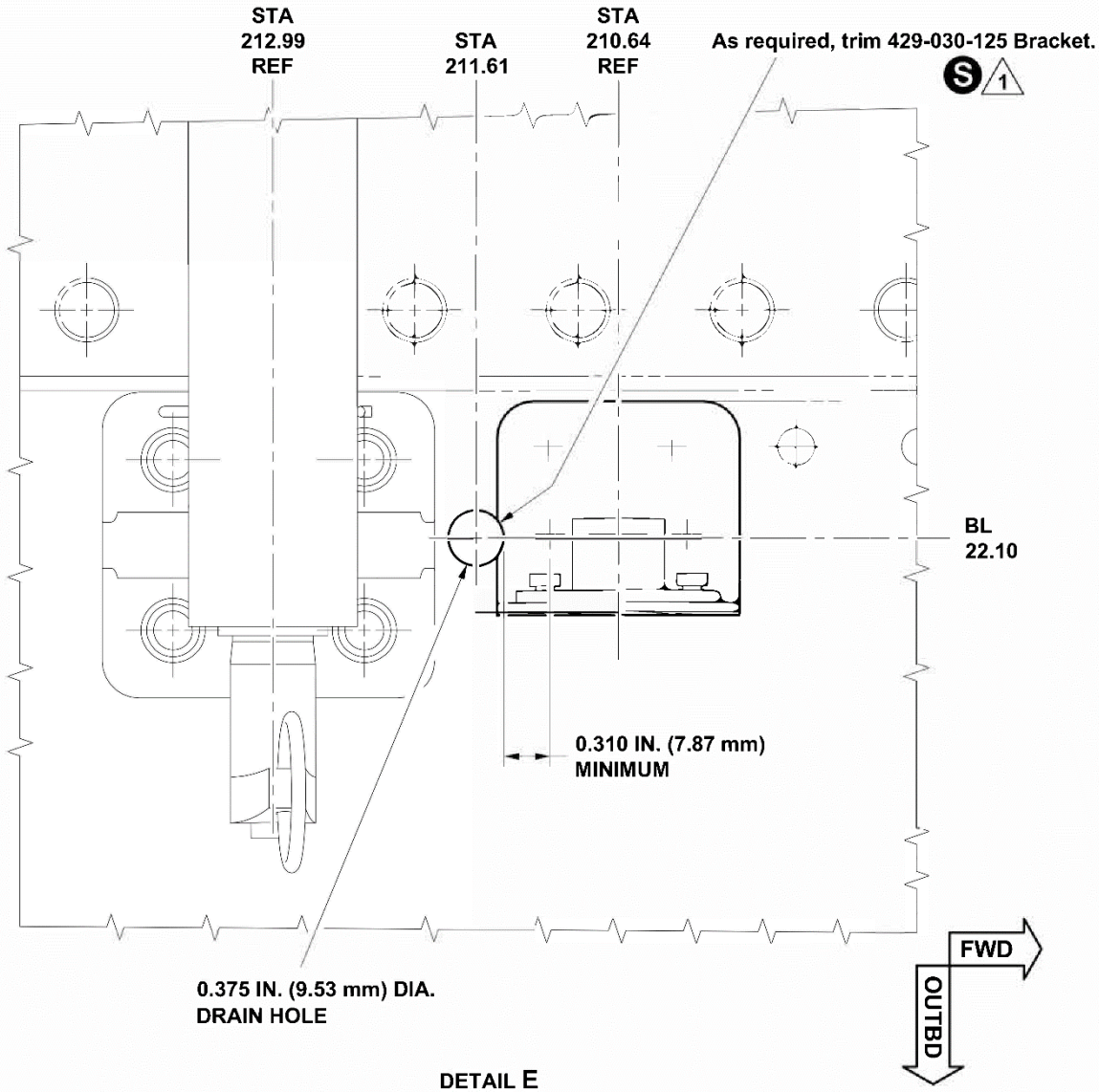


**DETAIL E**
**LOOKING UP**
**LEFT SIDE SHOWN, RIGHT SIDE OPPOSITE**
**For aircraft with 429-706-009 Cargo Hook kit installed**

**S** **SEALANT (C-251)**

**NOTE**

**1** **Seal edge of bracket and sidebody with sealant (C-251)**

25534_001c

**Figure 1 (Sheet 3 of 3) – Sidebody Drain Holes**

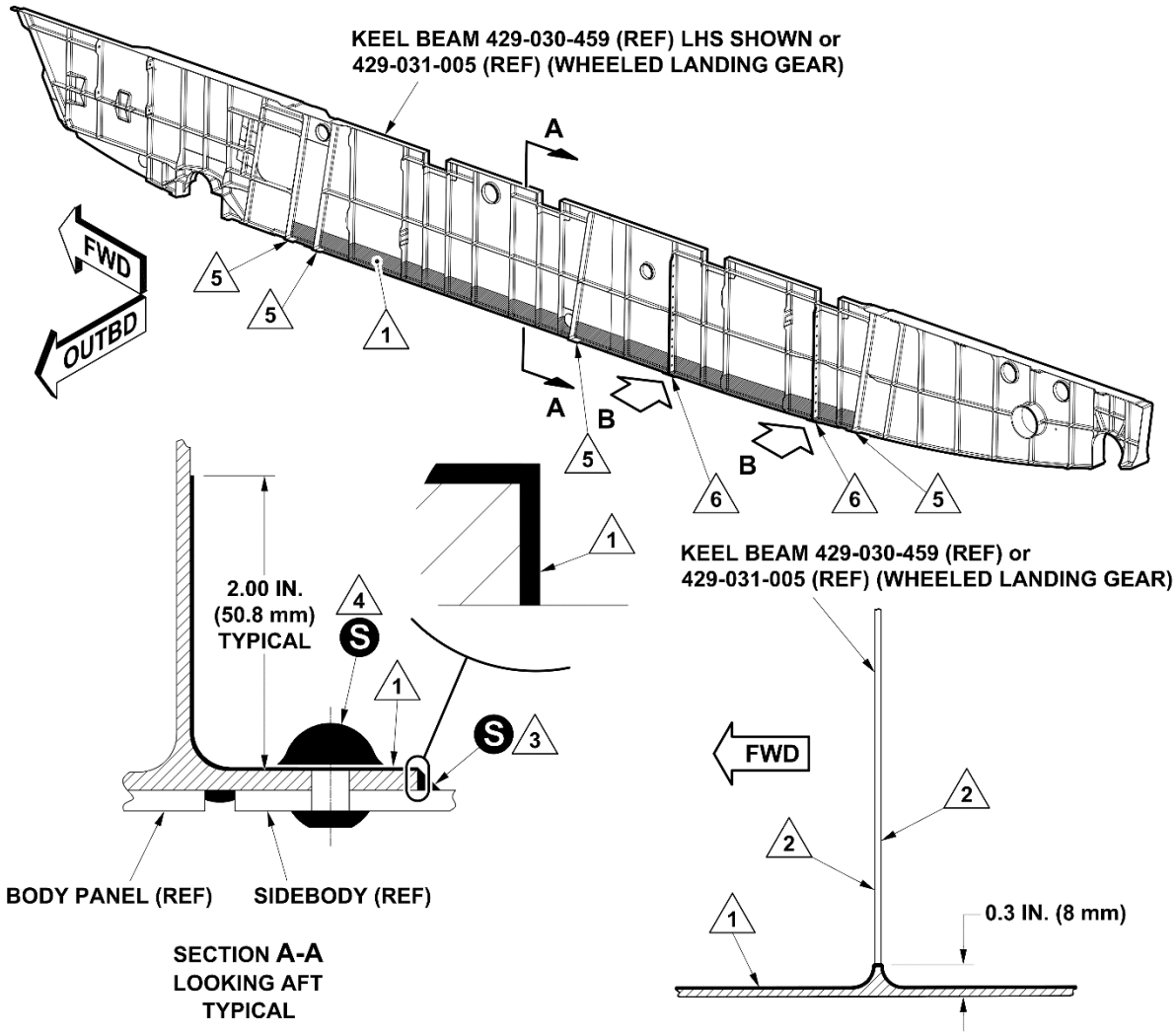


S SEALANT (C-251)

**NOTES**

1. Apply Polyurethane coating (C-245). Dry film thickness to be 0.0016 to 0.0024 inch (0.041 to 0.061 mm).
2. Omit polyurethane coating (C-245), both sides of the stiffener.
3. Fillet seal using sealant (C-251).
4. Overcoat fasteners tails using sealant (C-251)
5. Locally overspay over adjacent mating frame with polyurethane coating (C-245).
6. For aircraft with cargo hook fitting 429-030-013 installed, fittings can remain in place and overcoated with polyurethane coating (C-245). Follow typical keel beam paint pattern.

25534_002

**Figure 2 – Keel Beam Protection**

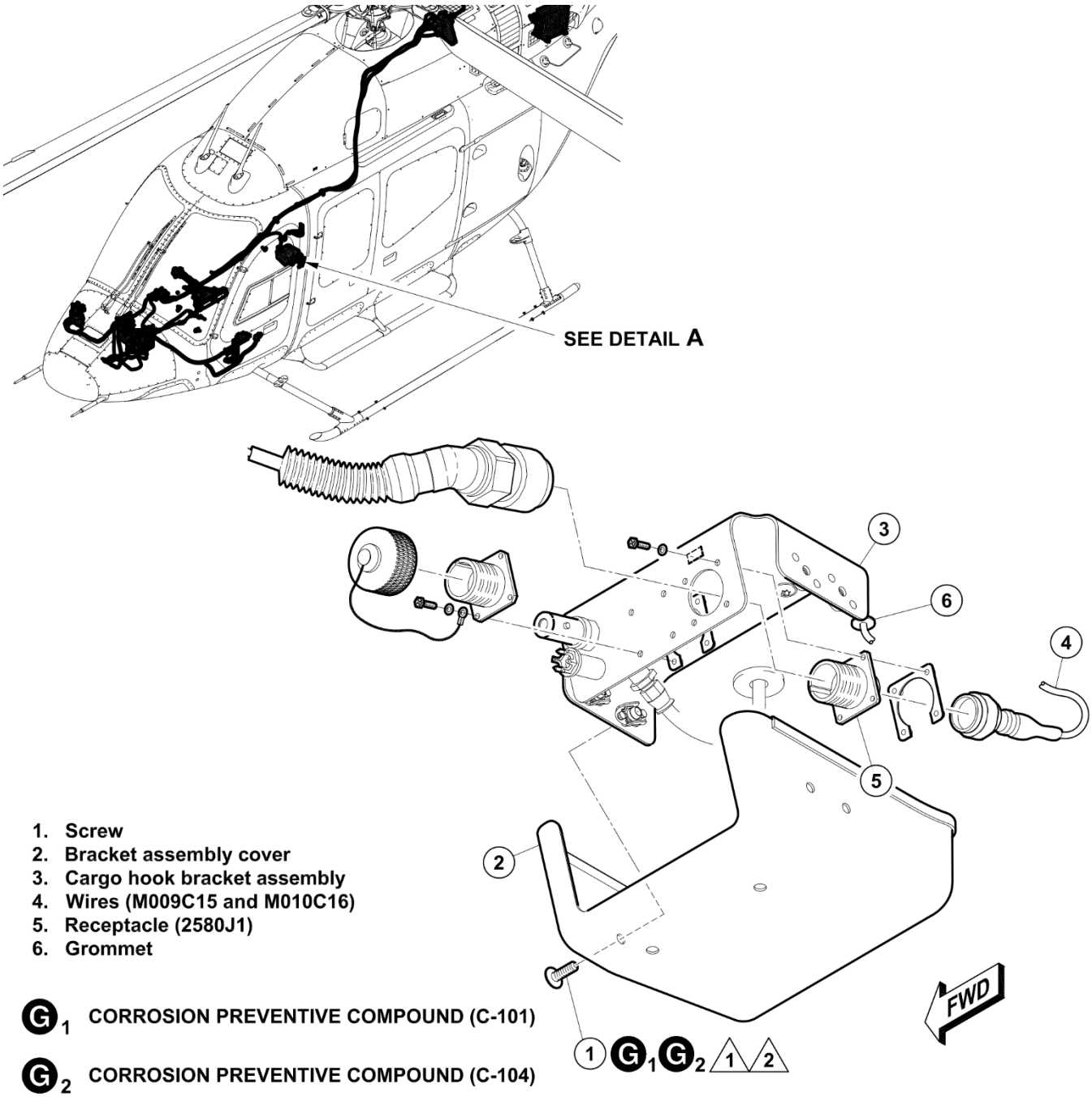


1. Screw
2. Bracket assembly cover
3. Cargo hook bracket assembly
4. Wires (M009C15 and M010C16)
5. Receptacle (2580J1)
6. Grommet

G1 CORROSION PREVENTIVE COMPOUND (C-101)

G2 CORROSION PREVENTIVE COMPOUND (C-104)

S SEALANT (C-251)

## NOTES

1. Apply corrosion preventive compound (C-104) to the shank of the screws (1) before installation. Do not apply corrosion preventive compound to the screw threads.

2. Apply corrosion preventive compound (C-101) to the screw (1) head after installation.

25534_003a

**Figure 3 – Sidebody Re-Work (Sheet 1 of 3)**

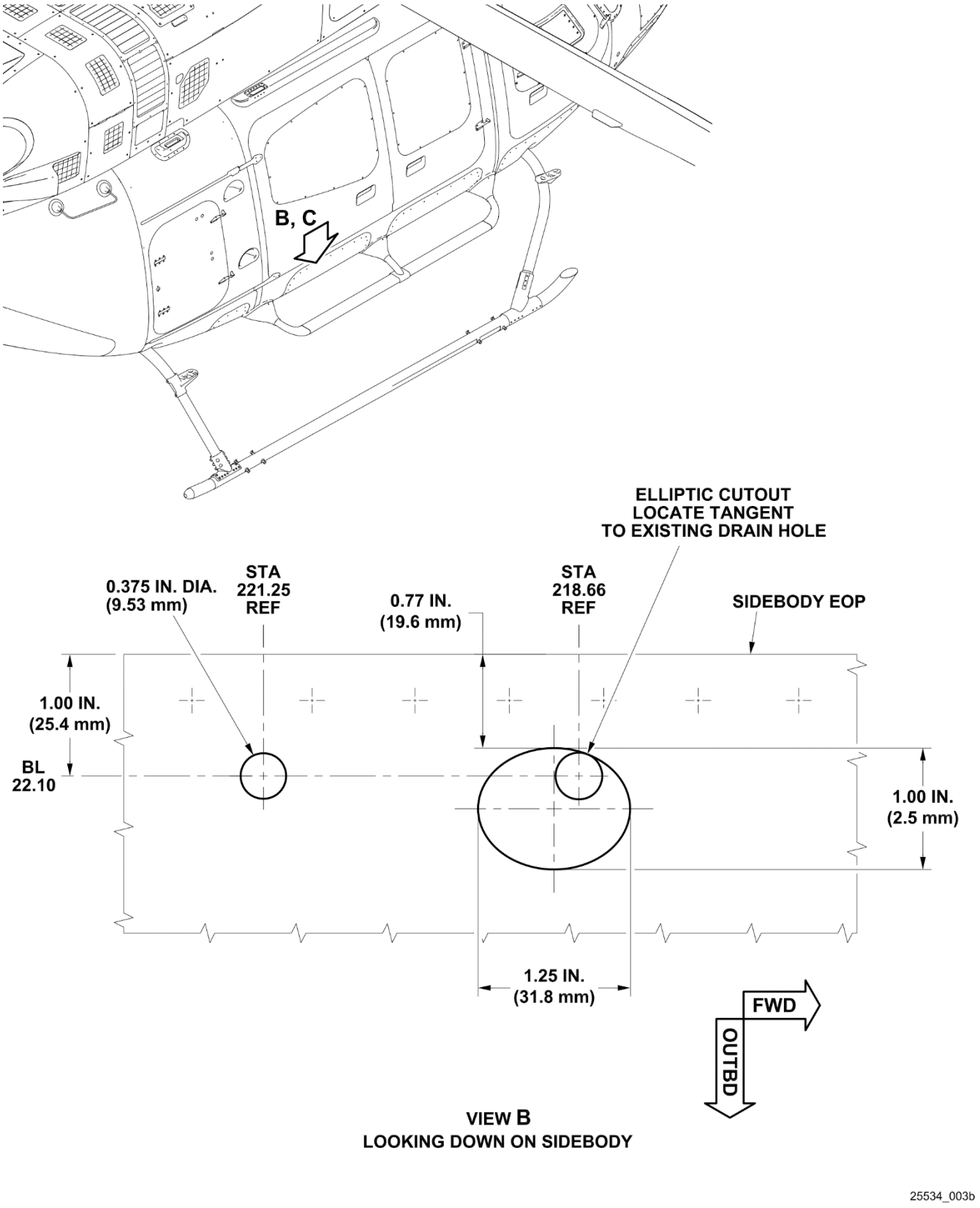


**Figure 3- Sidebody Re-Work (Sheet 2 of 3)**

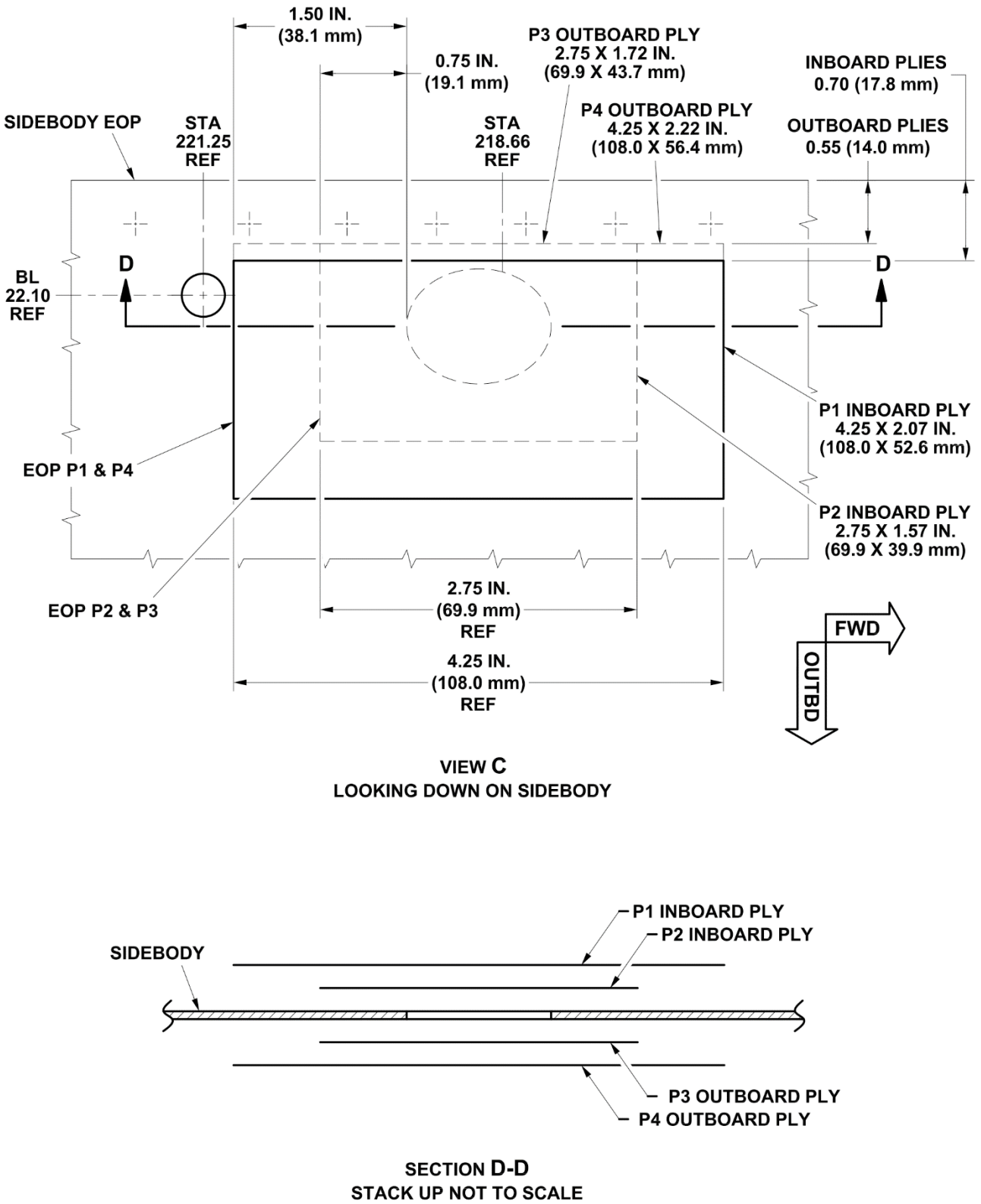


**Figure 3 – Sidebody Re-Work (Sheet 3 of 3)**