A Textron Company

TECHNICAL BULLETIN 505-20-25

27 January 2026

MODEL AFFECTED: **505**

SUBJECT: **CREW DOOR, RETROFIT OF.**

HELICOPTERS AFFECTED: **Serial numbers 65011 through 65169.**

[Serial number 65170 and subsequent will have the intent of this bulletin accomplished prior to delivery.]

COMPLIANCE: At customer's option.

DESCRIPTION:

PART I of this technical bulletin provides instructions to retrofit crew doors SLS-030-110-001/-002/-021/-022/-051/-052/-053/-054 with the latest production door locks. Among other things the change offers a robust locking mechanism and cable assemblies that allow easier latch bolt adjustments.

PART II of this technical bulletin provides instructions to modify the door hinges and eyebolts with improved pivot shoulder bushings. Additionally, this section provides instructions to install shims to the upper and lower striker as required. Helicopters complying with **PART II** of this bulletin will also meet the preliminary requirements for the use of the Installation Instructions: BHT-505-II-22; Quick Release Door kit.

Applicability of this bulletin to any spare part shall be determined prior to its installation on an affected helicopter.

APPROVAL:

The engineering design aspects of this bulletin are Transport Canada Civil Aviation (TCCA) approved.

CONTACT INFO:

For any questions regarding this bulletin, please contact:

Bell Product Support Engineering
Tel: 1-450-437-2862 / 1-800-363-8023 / productsupport@bellflight.com

MANPOWER:

Approximately 32 man-hours are required to complete this bulletin. This estimate is based on hands-on time and may vary with personnel and facilities available.

WARRANTY:

There is no warranty credit applicable for parts or labor associated with this bulletin.

MATERIAL:

Required Material:

The following material is required for the accomplishment Part I of this bulletin and may be obtained through your Bell Supply Center by ordering kit **SLS-704-110-005**.

-NOTE-

It is mandatory to install new seal 110-161-16B in accordance with Technical Bulletin 505-19-17 in conjunction with this kit if not already installed.

PART I

Part Number	Nomenclature	Qty (Note)
SLS-030-110-307	INTERIOR HANDLE	4
SLS-030-110-303	OUTBOARD SKIN LOCK DOUBLER	2
SLS-030-110-285	OUTER HANDLE SEAL	2
SLS-030-110-275	ROD, CABLE ATTACHMENT	2
SLS-030-110-269	CREW DOOR ACTUATOR FITTING	2
SLS-030-110-189	ACTUATOR ROD CABLE CLIP	2
SLS-030-110-188	RHS LATCH ACTUATOR INNER ROD	1

Part Number	Nomenclature	Qty (Note)
SLS-030-110-187	LHS LATCH ACTUATOR INNER ROD	1
SLS-030-110-186	RHS LATCH ACTUATOR OUTER ROD	1
SLS-030-110-185	LHS LATCH ACTUATOR OUTER ROD	1
SLS-030-110-181	OUTBOARD SKIN LOCK DOUBLER	2
SLS-030-110-183	OUTBOARD SKIN LOCK DOUBLER PLUG	2
0850-CLA	CAM LOCK ASSY	2
4592-7	KEY	2
140-001-9	WASHER	8
31-039-1DM	DECAL-ARROW	2
31-053-4DKFF	DECAL, ONE LINE	2
31-053-5DFHH	DECAL, ONE LINE	2
31-139-1AK	DECAL, PHOTOLUMINESCENT	2
AC-99-228	CABLE ASSY	2
AC-99-229	CABLE ASSY	4
M24066/2-315	CLIP	2
MS20470AD2-3	RIVET	4
MS20470AD4-4-5	RIVET	18
MS21042L08	NUT	6
MS24665-155	PIN	4
MS35214-22	SCREW	8
NAS1149DN832K	WASHER	8
NAS1149D0863J	WASHER	4 (2)
NAS1351C3-6	SCREW	2
NAS1352-02-3P	SCREW, CAP, SOCKET HEAD	8 (1)
NAS9301B-4-03	RIVET	4
NAS9302B-4-04	BLIND RIVET FLUSH	8
NAS9302B-5-03	RIVET	8
NAS9307M-4-03	BLIND RIVET	6

NOTES:

1. It is permissible to use NAS1352N02-3P in lieu of NAS1352-02-3P.
2. It is permissible to use washers NAS1149D0816J and NAS1149D0832J to obtain optimal engagement with door lock cam. The quantity and thickness of the washers can be modified as required. Minimum of one washer shall be installed on each side. Ensure no binding of handle mechanism after washer installation.

Consumable Material:

Consumable kit: **SLS-704-110-007**
The following material is required to accomplish this bulletin, but may not require ordering, depending on the operator's consumable material stock levels. This material may be obtained through your Bell Supply Center.

Part Number	Nomenclature	Qty (Note)	Reference *
2010-08610-01	Fairing compound	1 PT (1)	C-323
2010-12481-01	Sealant	1 PT (1)	C-251
2010-05973-00	Loctite 609	50cc (1, 2)	C-352
2010-05846-00	Loctite 083 (Grade CV)	50cc (1, 3)	C-320
2010-06640-00	3M Edge Sealer	8 oz (1)	C-349
2110-00010-00	Aliphatic Naphtha	1 Gal (1)	C-305

* C-XXX numbers refer to the consumables list in the BHT-ALL-SPM, Standard Practices Manual

NOTES:

1. The quantity indicated is the format the product is delivered in. Actual quantity required to accomplish the instructions in this bulletin may be less.
2. Per Specification ASTM D5363, AN0411
3. Per Specification ASTM D5363, AN0142

The following material is required for the accomplishment Part II of this bulletin and may be obtained through your Bell Supply Center by ordering kit **SLS-704-110-009**.

PART II

Part Number	Nomenclature	Qty (Note)
SLS-030-110-241	LOWER STRIKER FILLER	2
SLS-030-110-179	RHS UPPER DOOR SHIM	1
SLS-030-110-174	RHS UPPER DOOR HINGE	1
SLS-030-110-177	LHS UPPER DOOR SHIM	1
SLS-030-110-176	RHS LOWER DOOR HINGE	1
SLS-030-110-173	LHS UPPER DOOR HINGE	1
SLS-030-110-175	LHS LOWER DOOR HINGE	1
100-160-6-4	PIN	8
100-161-6-3	PIN	4
120-225C4T16P	SCREW	5 (1)
30-296-6W	COLLAR	12
30-331-050-100	CAP, ROUND	4

Part Number	Nomenclature	Qty (Note)
90-100C6	NUT	4
MS14144L5	NUT	4
MS24665-136	PIN	4
MS24665-285	PIN	4
NAS1149C0463R	WASHER	5 (2)
NAS1149D0332J	WASHER	4
NAS1149D0616K	WASHER	4
NAS1149D0632K	WASHER	4
NAS1149D0663K	WASHER	4
NAS1802-3-8P	SCREW	4
NAS6605D10	BOLT	4
NAS77A5-014P	BUSHING, FLANGED	8
NAS77A5-019P	BUSHING, FLANGED	4 (3)
NAS9307M-4-03	RIVET, BLIND	6

NOTES:

1. Only required if upper door shim SLS-030-110-177 or SLS-030-110-179 is required. If shim SLS-030-110-177 or SLS-030-110-179 are not used, reinstall original screws 120-225C4T15P that were removed.
2. Washer NAS1149V0463M can be used as an alternate.
3. As an alternate eye bolt assembly SLS-030-110-061 can be used instead of existing eye bolt AN46-C25 installed with new bushing NAS77A5-019P.

Consumable Material:

Consumable kit**: SLS-704-110-011**
The following material is required to accomplish this bulletin, but may not require ordering, depending on the operator's consumable material stock levels. This material may be obtained through your Bell Supply Center.

Part Number	Nomenclature	Qty (Note)	Reference *
2100-00031-00	CPC (Grade 2)	6 OZ (1)	C-104
2010-12481-01	Sealant	1 PT (1)	C-251
2230-00425-00	Epoxy Primer	1 PT (1)	C-204
2400-00184-00	Petrolatum	13 OZ (1)	C-008
2110-00010-00	Aliphatic Naphtha	1 Gal (1)	C-305

* C-XXX numbers refer to the consumables list in the BHT-ALL-SPM, Standard Practices Manual

NOTE:

1. The quantity indicated is the format the product is delivered in. Actual quantity required to accomplish the instructions in this bulletin may be less.

SPECIAL TOOLS:

None required.

WEIGHT AND BALANCE:

Not affected.

ELECTRICAL LOAD DATA:

Not affected.

REFERENCES:

505-IPC, Illustrated Parts Catalog
505-MM, Maintenance Manual
BHT-ALL-SPM, Standard Practice Manual
BHT-ALL-SRM, Structural Repair Manual
TB 505-19-17 - Door Seals, Improvement of
TB 505-18-10 - Door Lock Retrofit kit
BHT-505-II-22, Installation Instructions

PUBLICATIONS AFFECTED:

505-IPC, Illustrated Parts Catalog
505-MM, Maintenance Manual

ACCOMPLISHMENT INSTRUCTIONS:

-NOTE-

It is mandatory to install seal 110-161-16B in accordance with TB 505-19-17 if not already installed. When installing the seal, it is permissible to form a seal for proper fit and completely seal all faying surfaces with sealant (C-251) as required.

PART I: Locking mechanism and cable assemblies retrofit

1. Prepare the helicopter for maintenance.

2. Prepare a clean work surface for the crew door modification.

3. Remove the left crew door (1, Figure 1, View A) (DMC-505-A-52-10-01-00A-520A-A) and right crew door (DMC-505-A-52-10-02-00A-520A-A).

4. Starting with the left crew door (1), remove inner door panel (6, View B) as follows:

   a. Remove and retain the exterior handle (2, View A) from the actuator rod (3).

   b. Remove and retain the screws (4, View B) and the washers (5) from the inner door panel (6).

-NOTE-

The inner door panel (6) is only to be displaced from the crew door (1) far enough to be able to reach inside the door to remove the cable assembly (8, View C) from the lower four clips (9).

   c. Slide the inner door panel (6, View B) forward until the actuator rod (3) is removed from the outer handle seal (7).

   d. Disconnect the cable assembly (8, View C) from the four lower clips (9).

   e. Disconnect the cable assembly (8) from all remaining clips (9)

5. Remove all remaining components from the inner door panel (6).

   a. For helicopters S/N: 65011 through 65038, 65040 through 65046, 65048 and 65049 Pre TB 505-18-10, proceed as follows.

      (1) Remove and discard the bolts (10, View D), washers (11), and nuts (12).

      (2) Remove the cable assembly (8) from the cable clip (13).

      (3) Rotate the actuator fitting (14) until the “cutout” aligns with the cable assembly (8).

      (4) Disconnect the cable assembly (8) from the actuator fitting (14).

-NOTE-

There is an opening on the inner door panel (6, View E, Detail F) to assist the removal of the interior door handle hardware.

      (5) Using a pin punch, remove and discard the roll pin (15, View F) from the actuator rod (3) and interior handle (16).

      (6) Remove and discard the interior door handle (16) by pulling on it inboard.

      (7) Remove and discard cotter pin (17, View E).

-NOTE-

Actuator fitting (14) is installed with sealant (C-251). Heat can be applied to the component to assist with removal. Ensure not to apply heat to the inner door panel (6).

(8) Remove washers (18), actuator fitting (14) and actuator rod (3) by sliding the actuator rod (3) out of the inner door panel (6).

(9) Discard the actuator rod (3), washers (18) and actuator fitting (14).

(10) Remove and discard nut (19, View G), lock assembly (20) and the rubber sealing washer (21) from the exterior of the door (1). It may be slightly covered with paint.

(11) Remove existing fasteners (22).

(12) Remove and discard doubler (23).

b. For helicopters S/N: 65039, 65047, 65050 through 65169 or Post TB 505-18-10, proceed as follows:

(1) Remove screws (24, View H) washer (25), and lock fitting (26). Slide out and remove inner actuator rod (27). Remove screws (28), washers (29) from the actuator fitting (30). Discard all components.

(2) Remove and discard head cap Screw (31, View I).

(3) Remove and discard inner door handle (32) by pulling inboard.

(4) Remove and discard cotter pin (33, View H).

-NOTE-

Actuator fitting is installed with sealant (C-251). Heat can be applied to the component to assist with removal. Take care not to apply heat to the inner door panel (6).

(5) Remove washer (34), outer actuator rod (35), and actuator fitting (30) by sliding the outer actuator rod (35) out of the inner door panel (6).

(6) Discard outer actuator rod (35), actuator fitting (30), washers (34), head cap Screw (31), inner door handle (32).

(7) Remove and discard nut (36 View J), Cam (37), nut (38) lock assembly (39).

(8) Remove the fasteners (40) securing doubler (41).

(9) Remove and discard doubler (41).

6. Remove all cable assemblies as follows:

   a. Disconnect cable assembly (8) from all remaining cable clip locations (9, View C).

-NOTE-

Latch bolt stop screw might need to be removed to disengage the cable assembly from the latch bolt opening. When latch bolt stop screw is removed, the latch bolt can rotate in its housing. Latch housing must be marked/indexed to keep the cable holder in its original position.

   b. Remove screws (42) and washers (43). Carefully pulling out the latch housing (44) enough to disconnect the cable assembly (8) from the cable attach clip (45) and latch bolt (46). Take note of the latch locations (upper, mid, lower).

   c. Remove and discard all cable assemblies (8) from the door.

-NOTE-

Outer handle seal is installed with sealant. It is recommended to cut along the seal edge to prevent damage to the paint. Cutting edge should be towards the seal and not the door skin.

7. Remove outer handle seal (7, View A)

8. Remove locked (47) and open (48) decals.

9. Modify the door as follows:

-NOTE-

Fastener size for doubler (49) and doubler (50) installations are all the same.

   a. Temporarily position doubler (49) on door (1) as shown in Detail M. Transfer the existing holes from the door (1) into the doubler (49). Remove doubler (49). Position and center doubler (50) on doubler (49) within the door lock opening. Open center pilot holes on both doublers to 0.128 to 0.133 inch (3.26 to 3.38 mm).

b. Remove components, deburr, and clean as required. Clean interior of door of all debris.

c. Apply sealant (C-251) to faying surface of doubler (49).

-NOTE-

Rivets are to be orientated as shown.

d. Position doubler (49) on door (1) and wet install rivets (51) with sealant (C-251)

e. Apply sealant (C-251) to faying surface of doubler (50).

f. Position doubler (50) on doubler (49) and wet install rivets (51) with sealant (C-251).

g. Fill and fair the gap between doubler (50) and door (1) skin with sealant (C-251).

-NOTE-

Once cut out location has been determined, the doubler (52) can be used as a template to outline the proper cut out shape.

h. Position doubler (52) using measurements from outer door handle opening and mark the door lock cut out on the door outer skin shown in View N.

i. Cut out the door outer skin for new lock location as shown in Detail N. Deburr any sharp edges.

-NOTE-

Lock doubler (52) has two pilot holes for the clip (53). Clip (53) is to be located on the lower left portion of doubler (52) when looking inboard (View O).

j. Locate and drill the remaining pilot holes on lock doubler (52) per Detail P.

-NOTE-

The cam lock assembly (56) contains a cam lock (59) and should remain un-disturbed.

k. Temporarily position the lock doubler (52, View O) on outboard side of door (1). Ensure it is parallel with the existing opening for the exterior door handle. Temporarily install lock barrel (57) of the cam lock assembly (56) with nut (58) to assist with alignment. Retain cam lock (59), cam (60), lock washer (61), and nut (62) for later usage.

l. Transfer the existing pilot holes from the lock doubler (52) into the door (1). Locate the clip (53) on lock doubler (52). Drill all locations to final size as required. Remove nut (58), lock barrel (56), lock doubler (52) and clip (53). Deburr holes and clean the components to be fastened with solvent.

-NOTE-

Fasteners are to be orientated as shown.

m. Apply sealant (C-251) to the faying surface of doubler (52). Locate the lock doubler (52) inboard of the door (1) and wet install rivets (54) with sealant (C-251). Locate clip (53) on the lock doubler (52) and wet install rivets (55) with sealant (C-251). Clean excess sealant with aliphatic naphtha (C-305).

-NOTE-

The locked position of cam lock assembly (56) is when the key slot is on lower left side with cam (60) positioned horizontally. Refer to Detail Y for proper orientation (decals).

n. Install the cam lock assembly (56) as follows.

(1) Apply Loctite (C-352) on the threads of lock barrel (57). Insert the lock barrel (57) through the door (1), install and torque nut (58) 10 to 20 inch-pounds (1.13 to 2.26 Nm).

(2) Install cam lock (59) on the lock barrel (57). Temporarily install cam (60), lock washer (61), and nut (62) on the lock barrel (57). Cam (60) may need to be trimmed in a later step if required.

-NOTE-

The upper and lower cable assemblies are the same part number. Instructions for installation are the same for all locations. Cables will be attached to the inner door panel in a later step.

10. Inner door panel (6) rework.

a. Remove “EXIT” decal (63, View C).

b. Remove the existing fasteners (64 View Q) and cable clip (65).

c. Discard cable clip (65).

d. Locate the cable clip (66, View R). Transfer the holes from the inner door panel (6) to the cable clip (66).

e. Remove cable clip (66) from the inner door panel (6) and deburr. Clean components and faying surfaces with solvent (C-305).

f. Apply sealant (C-251) to the faying surface of cable clip (66).

-NOTE-

Fasteners are to be orientated as shown.

g. Install cable clip (66) with fasteners (67 and 68).

h. Plug previous fastener locations with blind rivets (69) and washer (70).

-NOTE-

The upper and lower cable assemblies are the same part number. Instructions for installation are the same for all locations. Cables will be attached to the inner door panel (6) in a later step.

11. Install the new cable assemblies.

a. Route the cable assemblies (71, 72 and 73) in the door as shown (View S).

b. Attach cable assemblies (71, 72 and 73) to latch bolt (46, View K) and cable attach clip (45).

c. Position the latch housing (44) on the crew door (1) for installation (View K).

d. Apply sealant (C-251) on shank of the screws (42).

e. Install the screws (42) and washers (43).

CAUTION

Do not excessively deform or damage washers (43).

f. Torque screw (42) until a slight bulge or deformation in washer (43) is visible.

g. Clean excess sealant. Secure cable assembly (71, 72 and 73, View S) to all clips (9) except for the three clips (9) located on the lower portion of the door.

12. Inner door panel (6) component installation.

-NOTE-

The outer actuator rod slot (74) must be orientated inboard as shown in View V.

a. Install the actuator outer rod (74), actuator fitting (75), washers (76), actuator inner rod (77) on the inner door panel (6).

b. Install cotter pin (78) as shown in Section T-T.

c. Apply Loctite (C-352) to the threads of screw (79). Install screw (79) through actuator outer rod (74) and into actuator inner rod (77). Leave a 0.030” of clearance as shown in View V to allow movement.

d. Install actuator fitting (75, View W):

(1) Slide the actuator fitting (75, View W) to the side of its installation location on the actuator outer rod (74).

(2) Apply sealant (C-251) to the faying surfaces on the actuator outer rod (74).

(3) Slide the actuator fitting (75) in place.

(4) Apply Loctite (C-352) to threads of screws (80, View S).

(5) Install screws (80) and washers (81) on the actuator fitting (75) and outer actuator rod (74). Torque screws (79) 12 to 15 inch-pounds.

(6) Remove excess sealant.

e. Interior handle (82, View I) installation.

(1) Clean the interior handle (82) with a clean cloth (C-516) moistened with Aliphatic naphtha (C-305).

(2) Apply to sealant (C-251) to the faying surface of the interior handle (82).

-NOTE-

There is an opening on the inner door panel (6) to facilitate the removal/installation of the interior door handle (82).

(3) Install the interior handle (82) onto the outer actuator rod (74) by applying enough force for the handle to snap into position.

(4) Apply Loctite (C-352) to the threads of head cap screw (83) and install on interior handle (82) and outer actuator rod (74). Torque screws to 2 inch-pounds.

(5) Attach the cable assembly (71, 72 and 73, View S) to the cable clip (66, Detail R).

f. Insert the cable attachment rod (84, View X) into the actuator fitting (75). Insert end of cable assemblies (71, 72 and 73) through lock fitting (75) and cable attachment rod (84).

-NOTE-

It is recommended that steps 13 and 14 be performed simultaneously to avoid unnecessary removal/installation of the inner door panel.

13. Verify the cam (60) and inner actuator rod (77) engagement as follows:

a. Using the key, make sure the lock assembly (56) is in the unlocked position. (Key turned fully counterclockwise).

b. Install inner door panel (6).

-NOTE-

Attaching the cable assemblies (71, 72 and 73) to the four lower clips is only necessary during the final assembly. All Screws (4) and washers (5) do not need to be installed during the verification steps. Loctite and the final torque of the exterior handle (2) is only necessary during the final assembly.

(1) Place inner door panel (6, View B) on the crew door (1) and slightly forward of the opening.

(2) Attach the cable assemblies (71, 72 and 73, View S) to clips (9).

-NOTE-

The outer handle seal (7) is omitted during the cam (60) engagement verification.

(3) Slide the inner door panel (6) aft while simultaneously guiding the actuator inner rod (77) into the outer handle seal (7, View A).

(4) Install screws (4, View B) and washers (5).

(5) Torque the screws (4) 12 to 15 inch-pounds (1.35 to 1.70 Nm).

(6) Apply Loctite (C-320) to the threads of the exterior door handle (2, View A) during final assembly.

(7) Install exterior door handle (2).

(8) Torque the exterior handle (2) until the shank bottoms out.

c. Rotate the lock assembly (56) into the locked position with the key.

-NOTE-

The quantity and thickness of the washers (76, View S) on actuator outer rod (74) can be modified as required. It is permissible to use washers NAS1149D0816J and NAS1149D0832J to obtain optimal engagement with cam (60, View U). Minimum of one washer shall be installed on each side of the inner door panel structure. Ensure no binding of handle mechanism after washer(s) installation.

d. If found acceptable with no excessive forcing required, proceed to step 14. If excessive force is required, adjust as follows:

(1) Remove the inner door panel (6) as follows.

(a) Remove and retain the exterior handle (2, View A) from the actuator inner rod (77).

(b) Remove and retain the screws (4, View B) and the washers (5) from the inner door panel (6).

-NOTE-

The inner door panel (6) is only to be displaced from the crew door (1) far enough to be able to reach inside the door to remove the cable assemblies (71, 72 and 73, View C) from the lower four clips (9).

(c) Slide the inner door panel (6, View B) forward until the actuator inner rod (77 is removed from the outer handle seal (7).

(d) Disconnect the cable assembly (8, View C) from the four lower clips (9).

(2) Remove nut (62, View O), lock washer (61) and cam (60).

CAUTION

Do not trim the actuator inner rod (77).

(3) Trim the cam (60) as required to ensure proper engagement into the slot of actuator inner rod (77) when the key is turned.

(4) Install cam (60, View I), lock washer (61) and nut (62).

(5) Torque nut (62) 10 to 20 inch-pounds (1.13 to 2.26 Nm).

e. Repeat step 13.d. until found acceptable.

14. Verify the latch bolt recess depth as follows.

a. Remove the inner door panel in accordance with step 13.d.(1).

b. Apply Loctite (C-352) to threads of cable assemblies (71, 72 and 73).

-NOTE-

Nuts (85) must be installed against the flat portion of cable attachment rod (84).

c. Install nuts (85) on cable assemblies (71, 72 and 73). Adjust the latch bolt (46) recess depth by tightening and/or loosening the nuts (85) until the required latch bolt (46) recess depth value is achieved. Loctite (C-352) required on nut (85).

d. Temporarily install inner door panel in accordance with step 13.b. Installing the exterior handle is not required.

e. Ensure all latch bolts (46, Section L-L) are fully extended when handles are in latched position. Full extension is achieved when latch bolt screw (86) touches the outboard area of the slot in the latch bolt housing (44, View K).

(1) It is permissible to remove material from bottom ends of inner door handles to achieve full extension. Touch up the interior door handles with red paint as required.

f. Latch bolts (46) must recess a minimum of 0.105 inch (2.67 mm) inside latch housing (44) when each door handle (82) is operated individually from the full lock position to the full unlatched position.

15. Remove the inner door panel (6) as per step 13.d.(1).

16. Remove nut (62, View O) and lock washer (61).

17. Apply Loctite (C-352) to the threads of lock barrel (57) near the cam (60) only.

18. Install lock washer (61) and nut (62).

19. Apply sealant (C-251) to the faying surfaces of outer handle seal (7). Install outer handle seal (7) on door (1). Clean excess sealant with naphtha.

20. Clean area of all foreign object.

21. Install inner door panel (6, View B) as per Step 13.b.

22. Install locked decal (87, View Y), open decal (88) and arrow decal (89). Install exit decal (63, View C). Seal edge of decals with edge sealer (C-349).

23. Repeat steps 1 through 25 for the right crew door.

24. Install the left crew door (1) DMC-505-A-52-10-01-00A-720A-A and right crew door (1) DMC-505-A-52-10-02-00A-720A-A.

25. Make an entry in the helicopter logbook and historical service records indicating compliance with **PART I** of this Technical Bulletin.

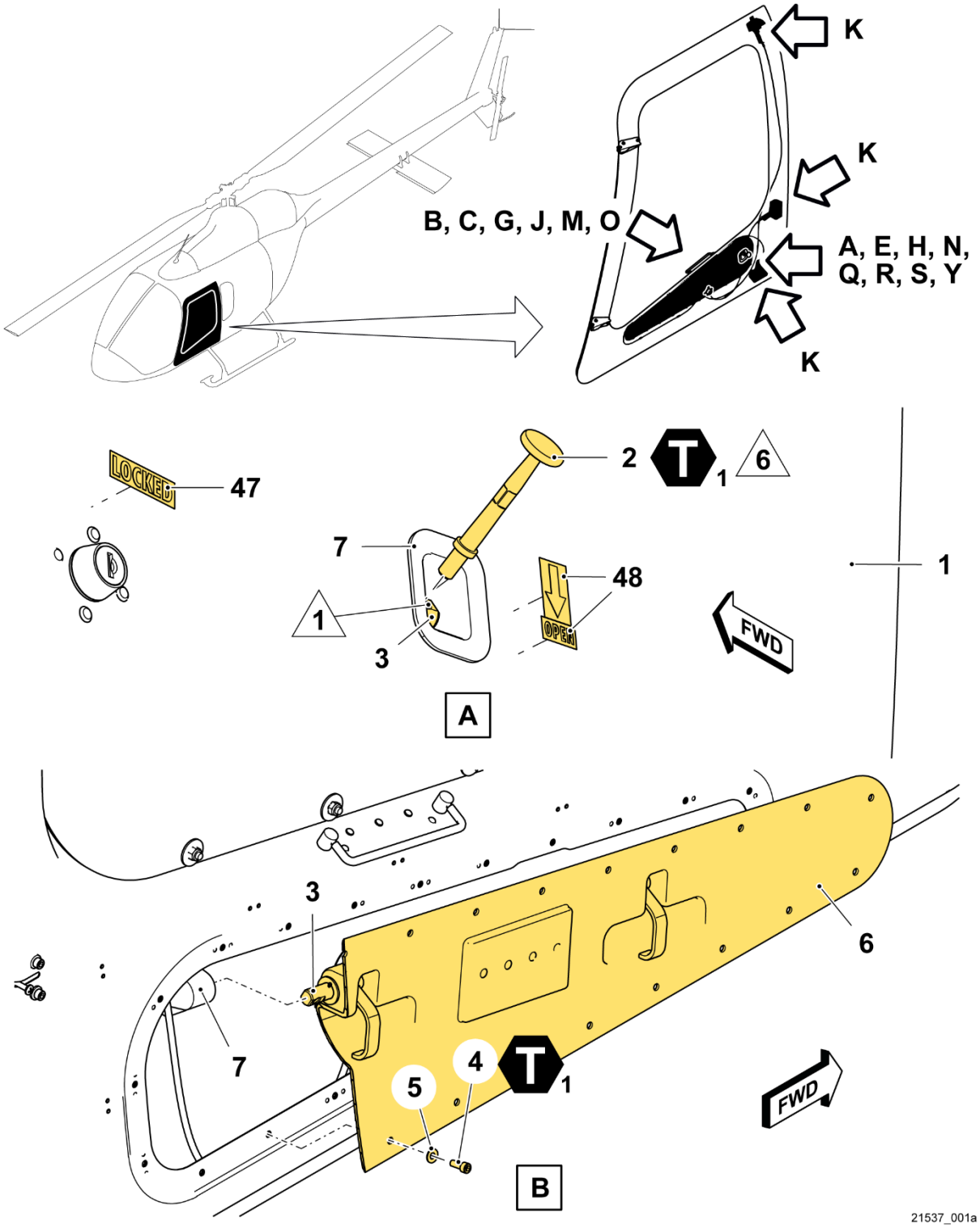

Figure 1 - Crew door mechanism removal / installation (Sheet 1 of 13)

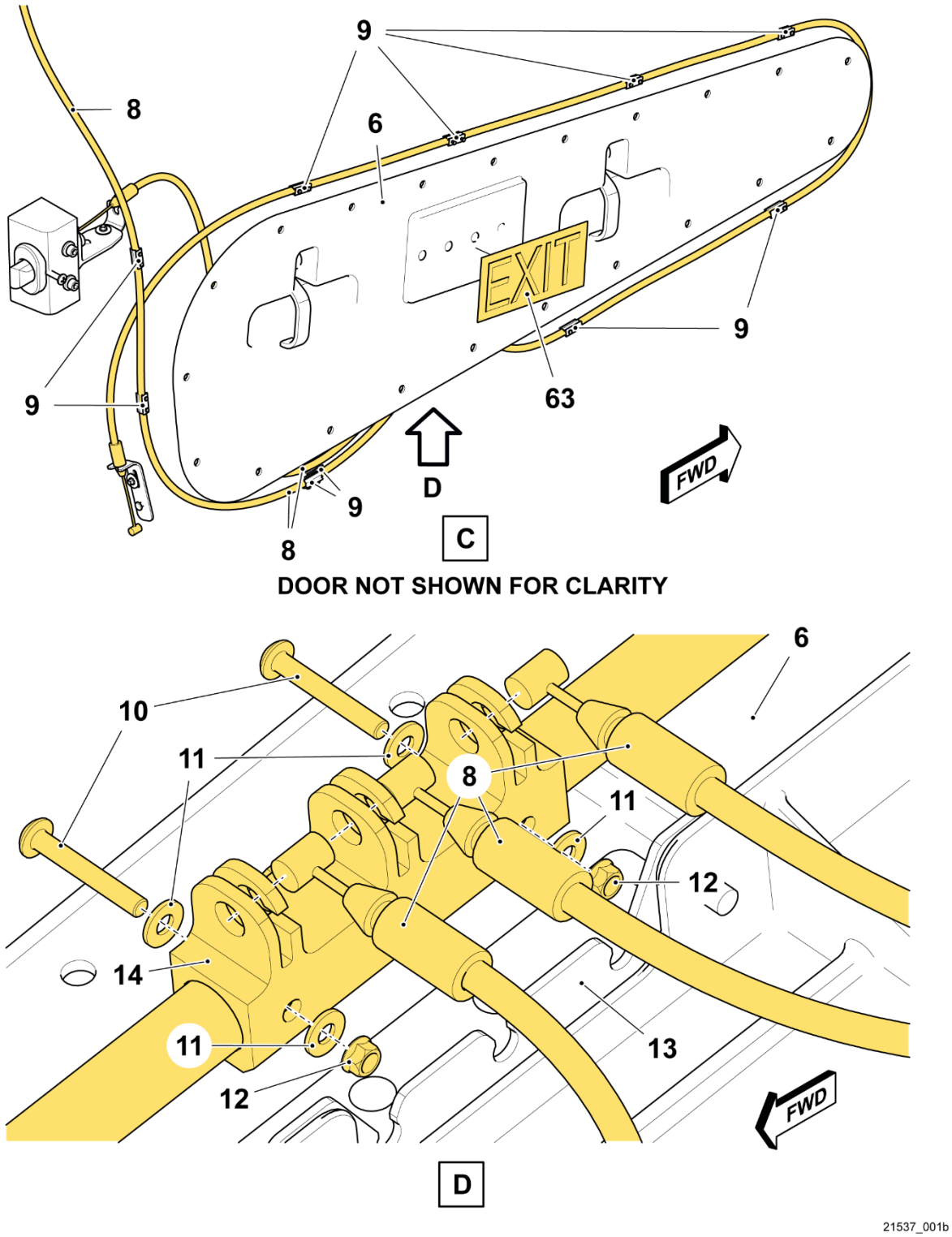

Figure 1 - Crew door mechanism removal / installation (Sheet 2 of 13)

NOTE: Views D is only applicable to aircraft serial number 65011 through 65038, 65040 through 65046, 65048 and 65049 Pre TB 505-18-10

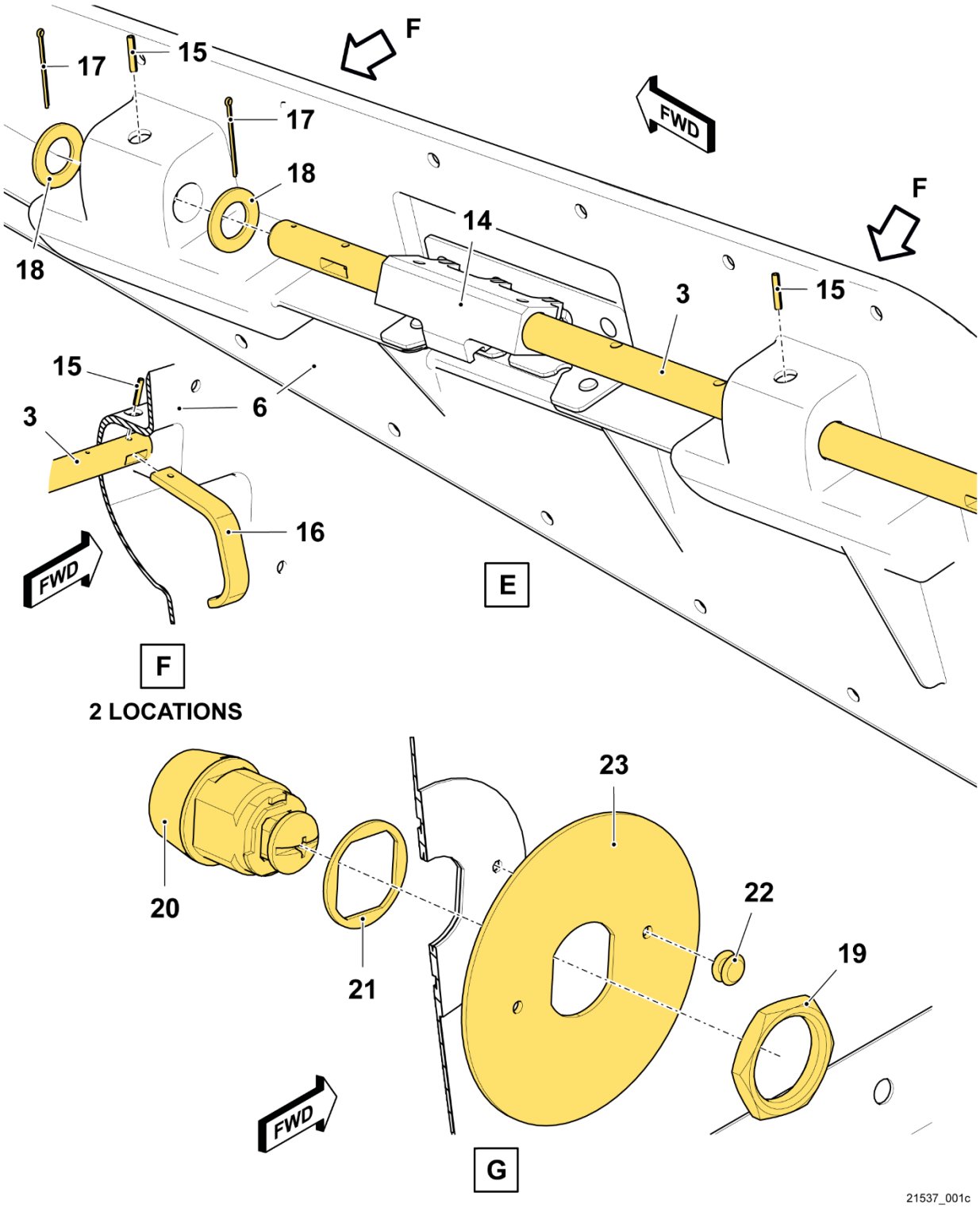

Figure 1 - Crew door mechanism disassembly (Sheet 3 of 13)

NOTE: Views E, F and G are only applicable to aircraft serial number 65011 through 65038, 65040 through 65046, 65048 and 65049 Pre TB 505-18-10

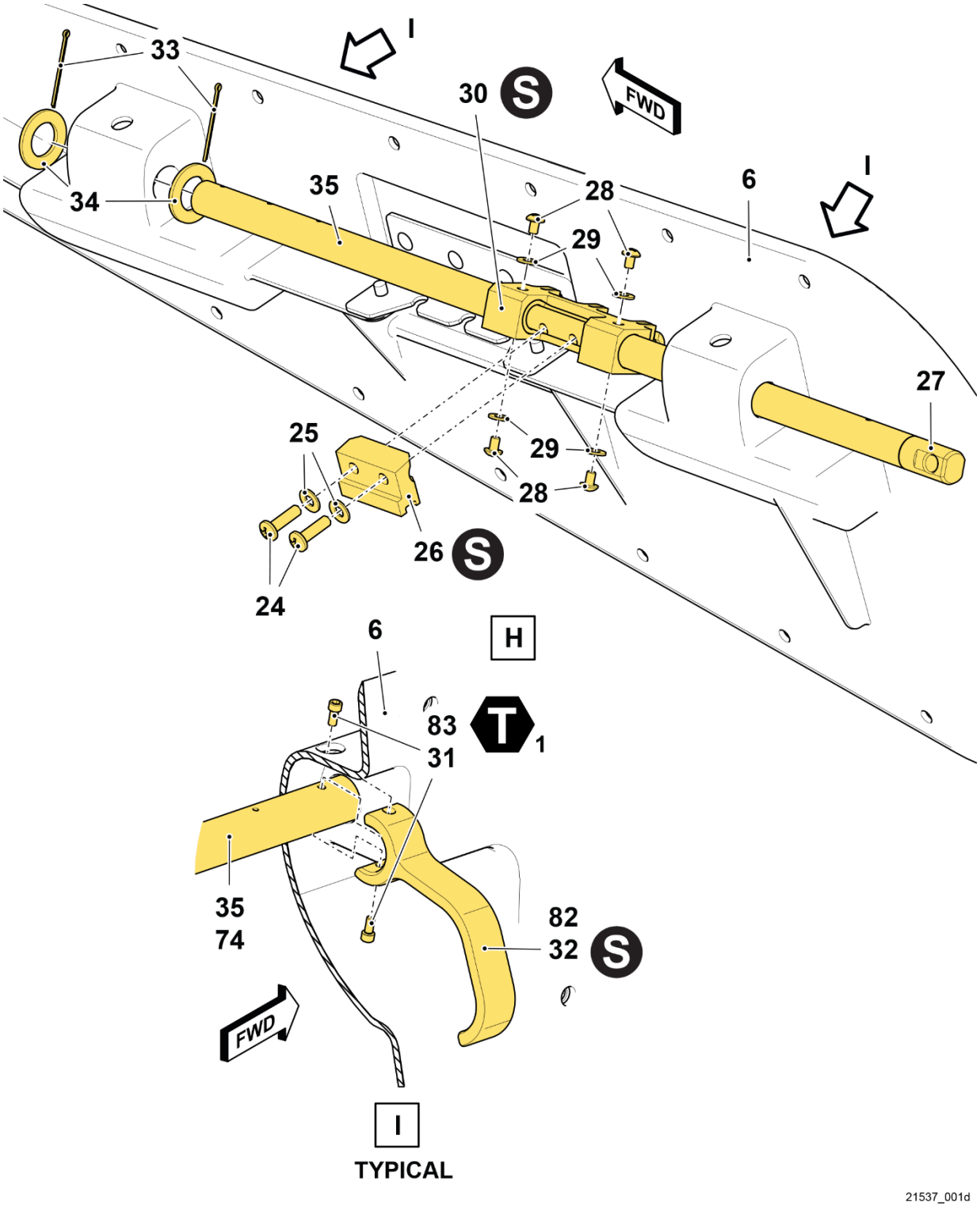

Figure 1 - Crew door mechanism disassembly (Sheet 4 of 13)

NOTE: Views H and I are only applicable to aircraft serial number 65039, 65047 and 65050 through 65169 or Post TB 505-18-10

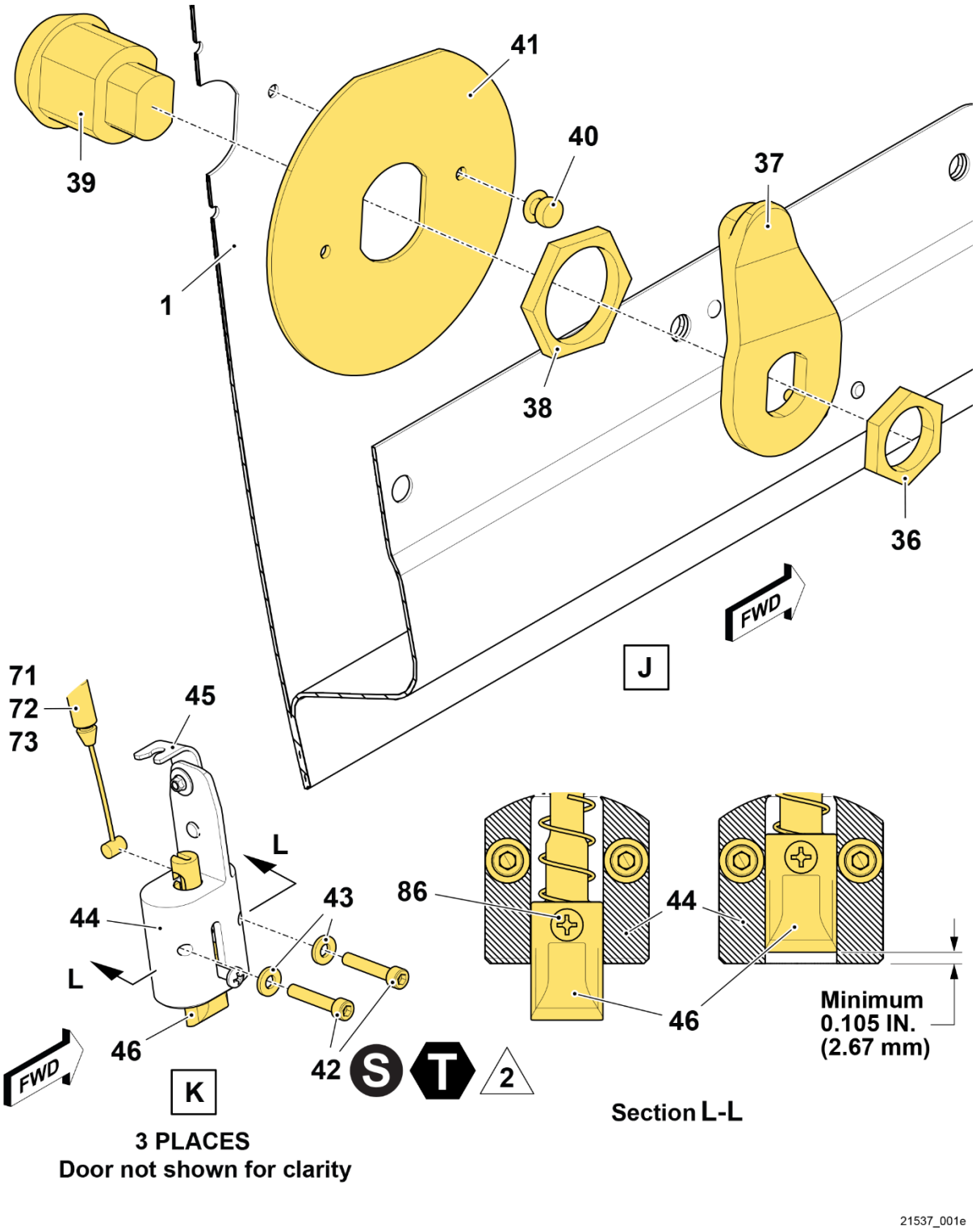

Figure 1 - Crew door mechanism disassembly (Sheet 5 of 13)

NOTE: View J is only applicable to aircraft serial number 65039, 65047 and 65050 through 65169 or Post TB 505-18-10

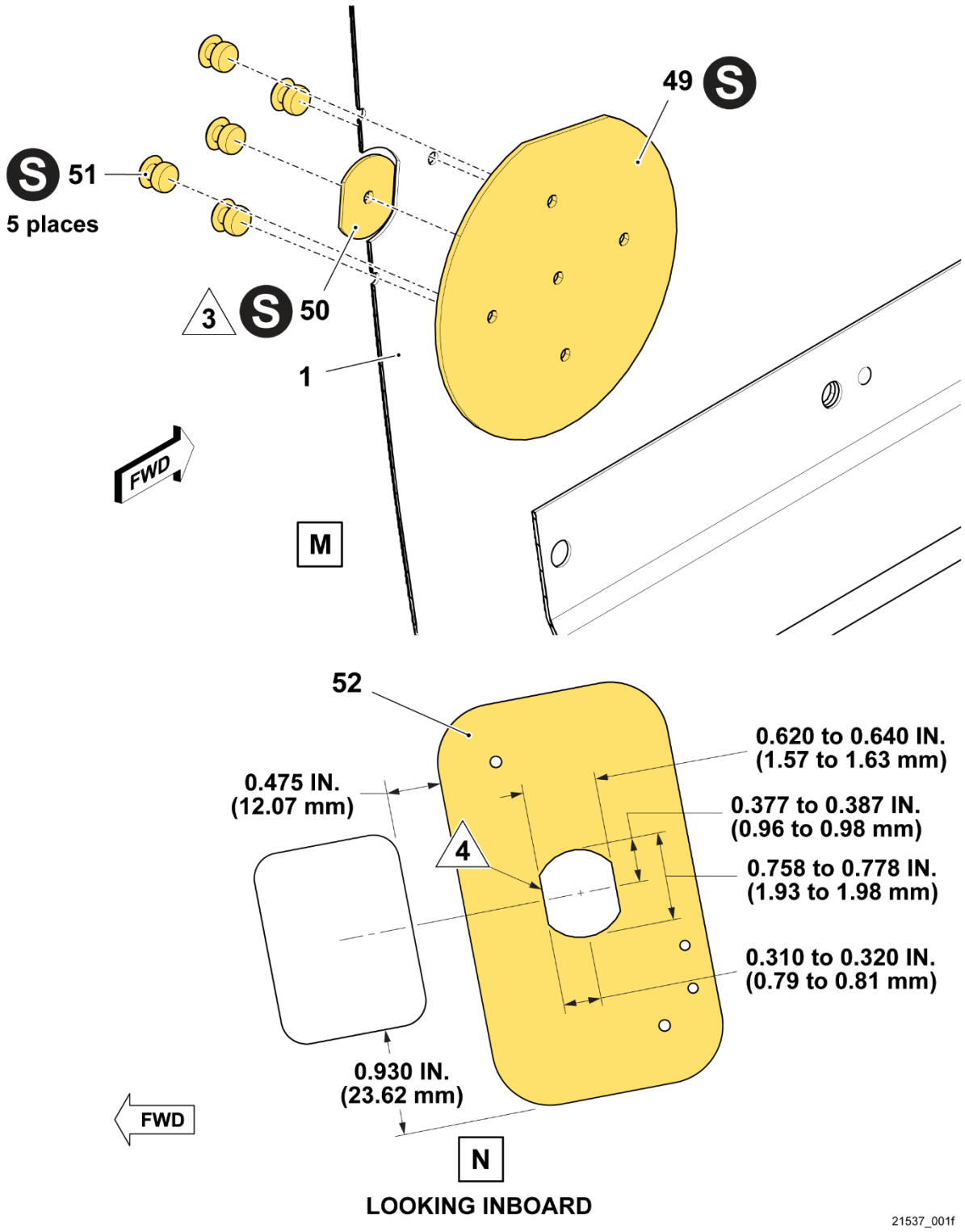

Figure 1 – Door lock relocation (Sheet 6 of 13)

NOTE: Sealant C-251 is required on mating surfaces of doublers 49 and 51.

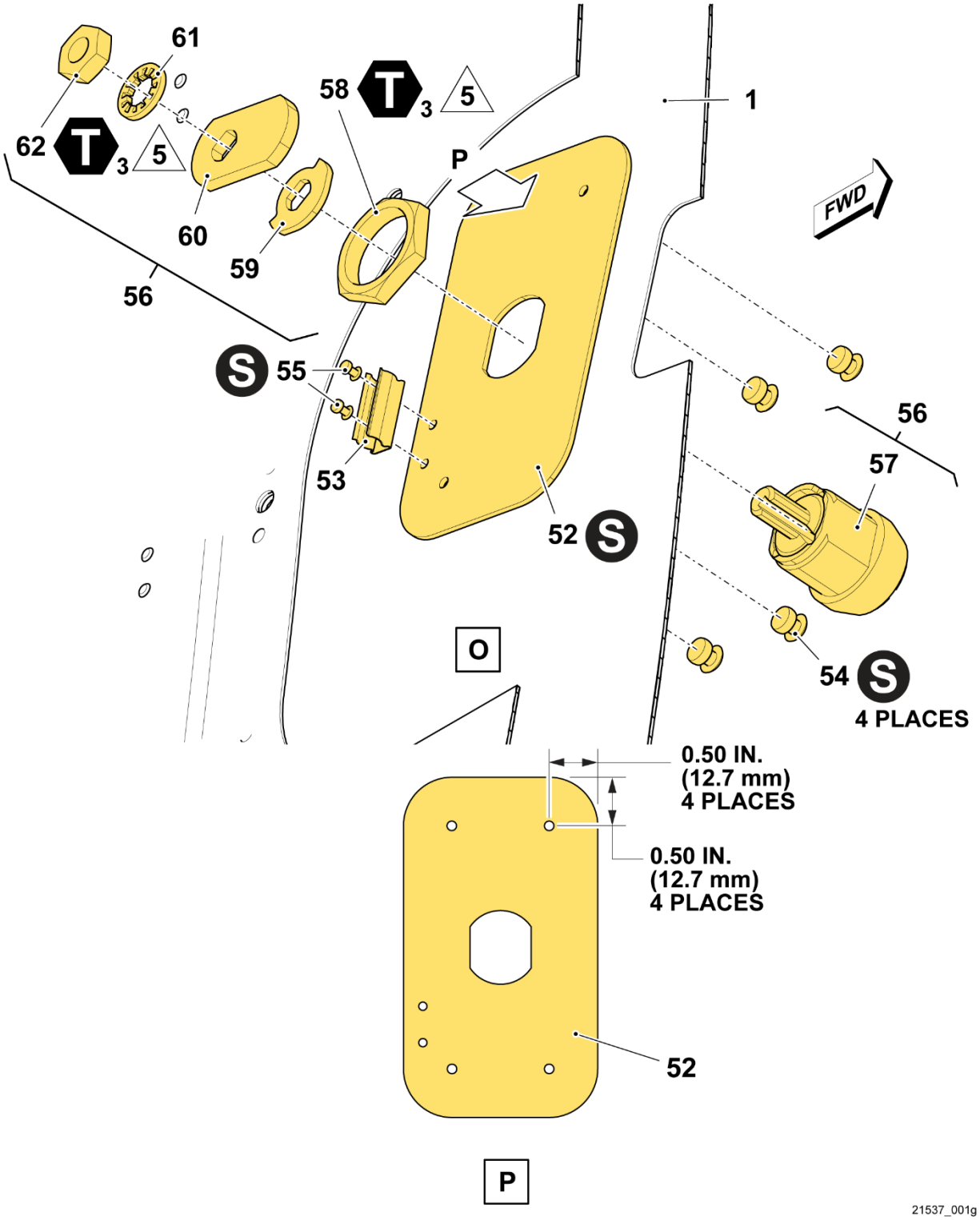

Figure 1 – Door lock relocation (Sheet 7 of 13)

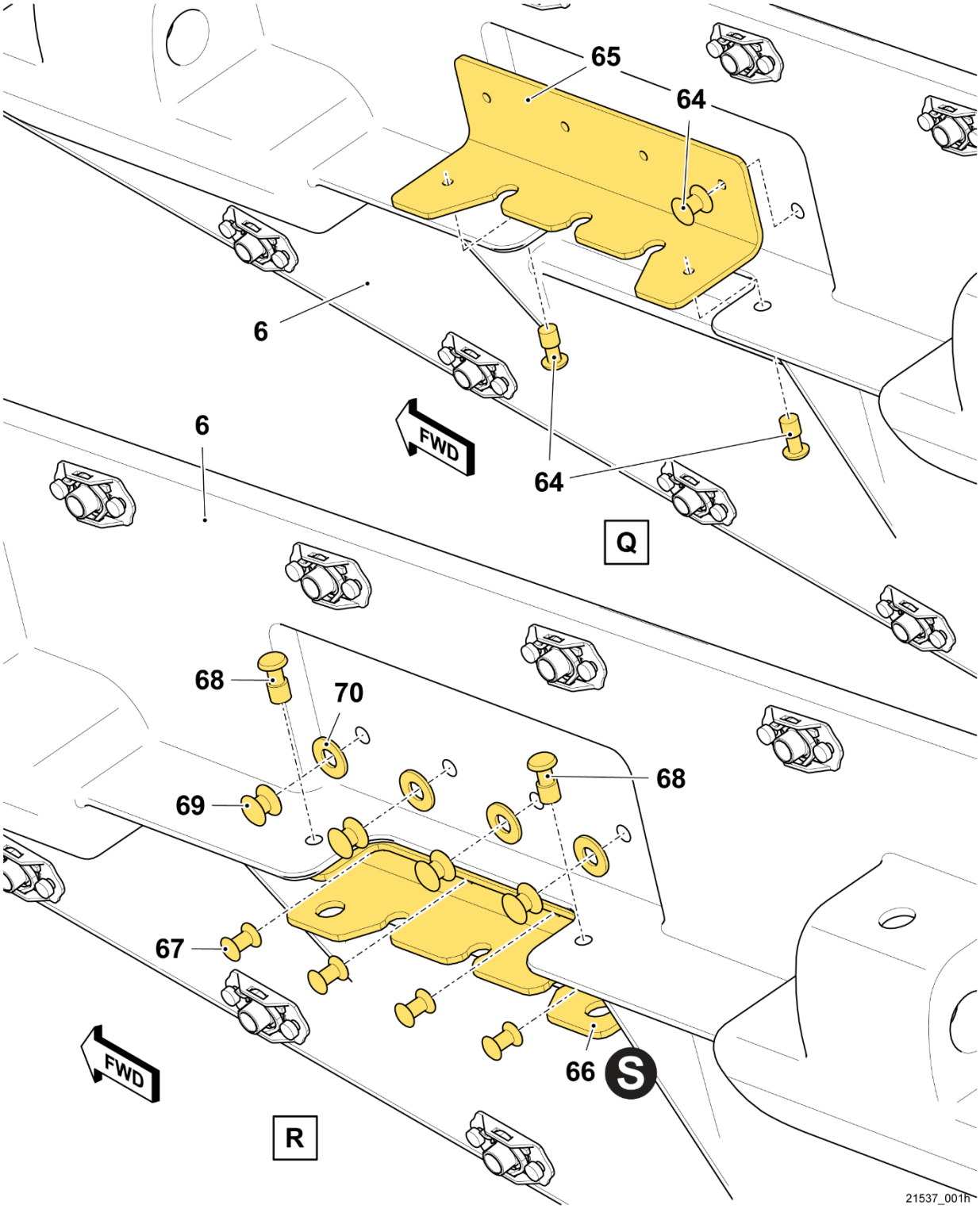

Figure 1 – Cable support replacement (Sheet 8 of 13)

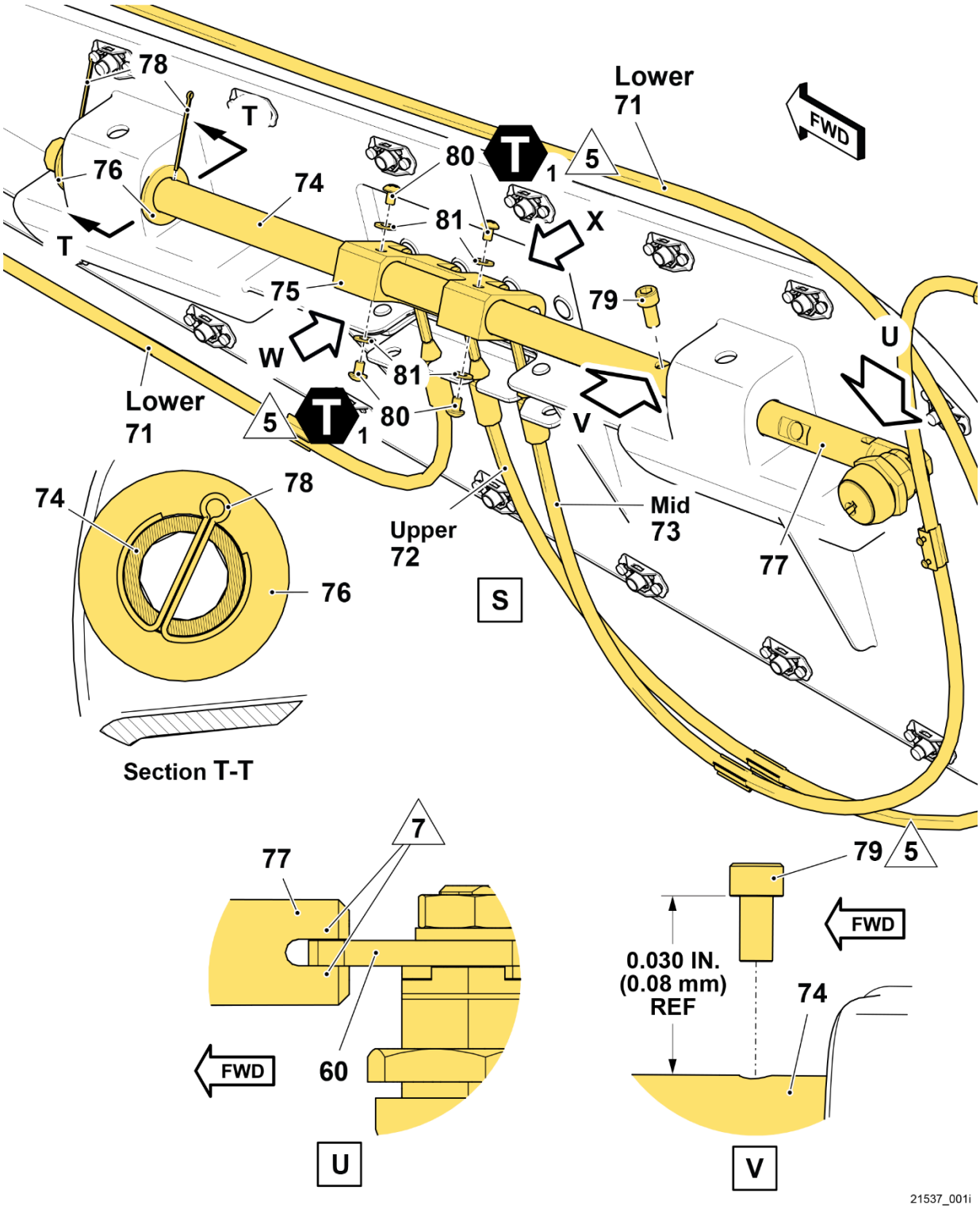

Figure 1 – Door mechanism assembly (Sheet 9 of 13)

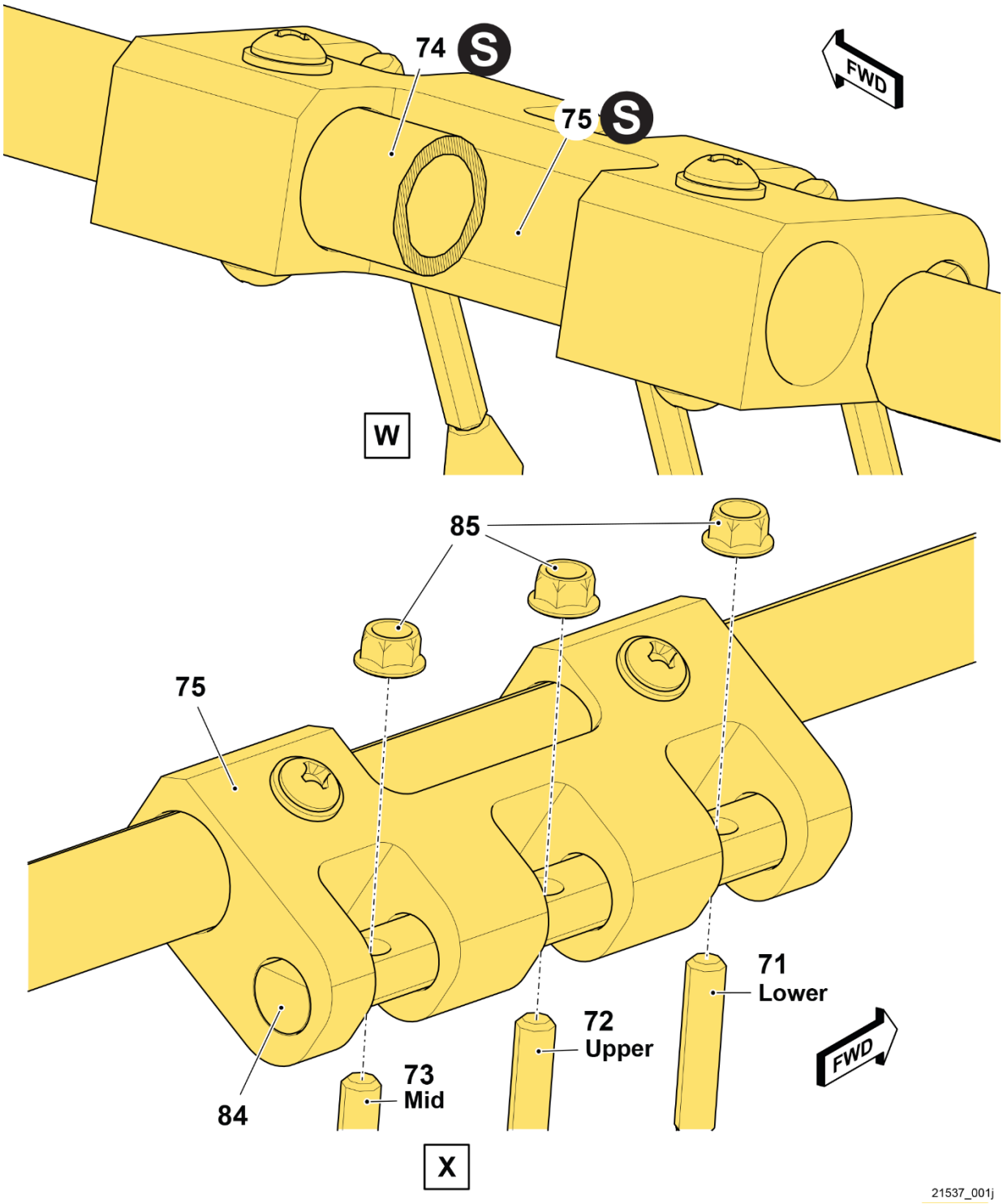

Figure 1 – Door mechanism assembly (Sheet 10 of 13)

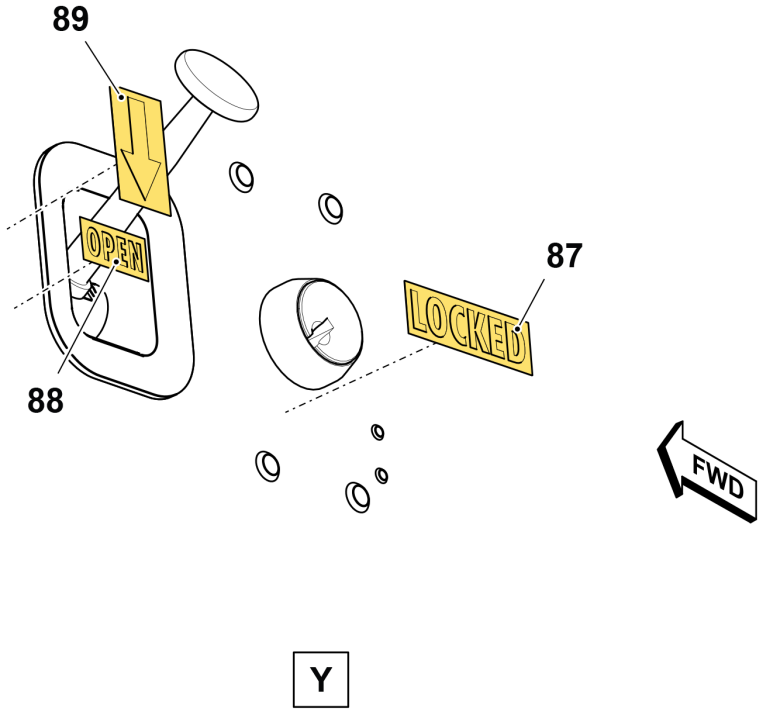

21537_001k

Figure 1 – Decal installation (Sheet 11 of 13)

1. Crew door (Ref)
2. Exterior handle (Ref)
3. Actuator rod (Ref)
4. Screws (Ref)
5. Washers (Ref)
6. Inner door panel (Ref)
7. Outer handle seal (Ref)
8. Cable assembly (Ref)
9. Clips (Ref)
10. Bolts (Ref)
11. Washer (Ref)
12. Nut (Ref)
13. Cable clip (Ref)
14. Actuator fitting (Ref)
15. Roll pin (Ref)
16. Interior handle (Ref)
17. Cotter pin (Ref)
18. Washers (Ref)
19. Nut (Ref)
20. Lock assembly (Ref)
21. Rubber sealing washer (Ref)
22. Rivets (Ref)
23. Doubler (Ref)
24. Screws (Ref)
25. Washer (Ref)
26. Lock fitting (Ref)
27. Inner actuator rod (Ref)
28. Screws (Ref)
29. Washers (Ref)
30. Actuator fitting (Ref)
31. Head cap Screw (Ref)
32. Interior door handle (Ref)
33. Cotter pin (Ref)
34. Washer (Ref)
35. Outer actuator rod (Ref)
36. Nut (Ref)
37. Cam (Ref)
38. Nut (Ref)
39. Lock assembly (Ref)
40. Rivets (Ref)
41. Doubler (Ref)
42. Screws (Ref)
43. Washers (Ref)
44. Latch Housing (Ref)
45. Cable attach clip (Ref)
46. Latch (Ref)
47. Lock decal (Ref)
48. Open decal (Ref)
49. Doubler SLS-030-110-181
50. Doubler SLS-030-110-183
51. Rivets MS20470AD4-4-5
52. Doubler SLS-030-110-303
53. Clip M24066/2-315
54. Rivets MS20470AD4-4-5
55. Rivets MS20470AD2-3
56. Cam lock assembly 0850-CLA
57. Lock barrel (Ref)
58. Nut (Ref)
59. Cam lock (Ref)
60. Cam (Ref)
61. Lock washer (Ref)
62. Nut (Ref)
63. Exit Decal 31-139-1AK
64. Rivets (Ref)
65. Cable clip (Ref)
66. Cable clip SLS-030-110-189
67. Fastener NAS9302B-4-04
68. Fastener NAS9301B-4-03
69. Fastener NAS9302B-5-03
70. Washer NAS1149DN832K
71. Lower cable assembly AC-99-229
72. Upper cable assembly AC-99-229
73. Mid cable assembly AC-99-228
74. Latch actuator outer rod SLS-030-110-185/-186
75. Actuator fitting SLS-030-110-269
76. Washers NAS1149D0863J
77. Actuator inner rod SLS-030-110-187
78. Pin MS24665-155
79. Screw NAS1351C3-6
80. Screw MS35214-22
81. Washer 140-001-9
82. Interior handle SLS-030-110-307
83. Head cap screw NAS1352-02-3P
84. Cable attachment rod SLS-030-110-275
85. Nut MS21042L08
86. Latch bolt screw (Ref)
87. Locked decal 31-053-5DFHH
88. Open decal 31-053-4DKFF
89. Arrow decal 31-039-1DM

21537_001I

Figure 1 - Part list (Sheet 12 of 13)

S SEALANT (C-251)

T1 12 TO 15 IN-LBS (1.4 TO 1.7 Nm)

T2 2 IN-LBS (0.23 Nm)

T3 10 TO 20 IN-LBS (1.3 TO 2.3 Nm)

NOTES

1. Apply Loctite (C-320).
2. Torque the screw (42) until slight bulge or deformation in washer (43) is visible, do not excessively deform or damage washer.
3. Fill and fair.
4. Once cut out location has been determined, the doubler (52) can be used as a template for proper shape.
5. Apply Loctite (C-352).
6. Torque the exterior handle (2) until the shank bottoms out.
7. Trim the cam (60) as required to ensure proper engagement into slot of actuator inner rod (77) when the key is turned.

21537_001m

Figure 1 – Symbols and Notes (Sheet 13 of 13)

PART II: Crew door hinges retrofit

1. Prepare the helicopter for maintenance.

2. Prepare a clean work surface for the crew door modification.

3. Record the gaps between upper, lower, and mid strikers and latch bolt housings (Figure 2, Section I-I, N-N, P-P and R-R). If the gaps are within the applicable tolerances listed below (Table 1), proceed to step 5.

Table 1

Position	RH door	LH door
Upper strikers	0.120 inch to 0.250 inch	0.120 inch to 0.250 inch
Mid strikers	0.120 inch to 0.200 inch	0.120 inch to 0.200 inch
Lower strikers	0.095 inch to 0.125 inch	0.140 inch to 0.170 inch

4. If the gaps are not within the specified tolerances listed above (Table 1), the affected door will need to be positioned to its optimal location within the cabin opening when both hinges are removed at the same time. If proper positioning cannot be accomplished with both hinges removed, contact Product Support Engineering.

5. Ensure there is a minimum clearance of 0.050 inch (1.27 mm) between the forward and aft side of latch bolts (35, View J) and the mating left-hand side upper striker (30).

6. Ensure there is a minimum clearance of 0.050 inch (1.27 mm) between the forward and aft side of latch bolt (52, View O) and the lower mating striker (47).

7. Ensure there is a minimum clearance of 0.050 inch (1.27 mm) between the upper and lower side of the latch bolt (54, View Q) and the mating mid striker plate (55).

8. Remove the left crew door (1, Figure 1, View A) (DMC-505-A-52-10-01-00A-520A-A) and right crew door (DMC-505-A-52-10-02-00A-520A-A).

9. Remove door seal for pre-TB 505-19-17 aircraft. If door seal is post-TB 505-19-17, only the portion of the seal over the hinge attachment fasteners needs to be unbonded locally to gain access to the hinge fastener heads.

10. Install left and right crew door (1, View A). Torque the nut (3) 1 to 5 inch-pounds (2.3 to 2.8 Nm) plus measured tare torque 6.5 to 60 inch-pounds (0.7 to 6.8 Nm). Ensure the door contour is flush with the sidebody within a profile tolerance of 0.250” inch (6.35 mm) (Figure 2, Section I-I).

11. Mark the contour of the existing hinge footprint on the crew door (1).

12. Push the door seal aside as required, remove the two forward hinge pins (20, View E).

13. After the door has been properly positioned on the airframe, close the door and secure the door in position on the airframe with tape.

14. It is recommended to position a locally manufactured shim between the lower latch bolt housing and lower striker to prevent the door from sagging during the hinge replacement (Section N-N).

-NOTE-

Only one hinge (upper or lower) at the same time is to be removed and replaced if the door was already found in its optimal position on the airframe (step 3).

15. Remove existing upper or lower hinge (15, View A) and the eyebolt as an assembly.

-NOTE-

Sealant (C-251) may have been used as an alternate to the cap round (8) installed on nut (10).

a. If present, remove and retain cap round (8, View B). Remove and discard cotter pin (9) and nut (10).

b. Remove the aft hinge attachment pin (19, View E).

-NOTE-

There is sealant (C-251) between the hinge and the door skin. Ensure not to damage the door outer skin when removing the hinge.

c. Remove existing hinge (15) and eyebolt (12) as an assembly. Discard existing hinge (15) and retain the eyebolt (12).

-NOTE-

Record the washer (11) stack up thickness for later installation to keep the door contour flush with the sidebody.

-NOTE-

Reworking the eyebolt (12) will convert it into the latest eyebolt configuration SLS-030-110-061 (14). New eyebolts SLS-030-110-061 (14) can be ordered separately instead of reworking existing eyebolts.

16. Rework one eyebolt (12).

    a. Enlarge the bore of eyebolt (12, Detail C). Deburr any sharp edges.

CAUTION

When applying heat, the eyebolt (12) temperature must not exceed 275 degrees Fahrenheit for a maximum of 2 hours.

    b. Apply heat to bore of eyebolt (12).

    c. Wet install bushing PN NAS77A5-019P (13) with epoxy polyamide primer (C-204) or zinc chromate primer (C-102) into the eyebolt (12) until flush. Set eyebolt (14) aside for a later step.

17. Hinge modification.

CAUTION

Temperature of the hinge (16 and 17) must not exceed 300 degrees Fahrenheit.

    a. Enlarged new hinges (16) pivot points 0.4370 to 0.4376 inch (11.10 to 11.12 mm) as shown in View D using a reamer and deburr.

        (1) Apply heat to the bore of the hinge. Wet install bushing (18, View D) with epoxy polyamide primer (C-204) or zinc chromate primer (C-102) into the hinges. Ensure the bushings (18) are fully seated.

    b. Locate the modified hinge (16) on the door (1) with the eyebolt (14) as an assembly.

    c. Install eyebolt (14, View F), washers (22, 23 and 24) and nut (25) with CPC (C-104). Torque the nut (25) 20 to 25 inch-pounds (2.3 to 2.8 Nm).

-NOTE-

Hinge footprint can slightly change especially if both hinges are removed at the same time to put the door to its optimal position within cabin opening (step 4).

d. Position the hinge on a similar footprint as the original hinge and back drill the aft hole to 0.189 to 0.191 inch (4.81 to 4.86 mm). Minimum edge distance to be 0.325 inch (8.26 mm) on hinges.

e. Install aft pin (19) temporarily to secure the hinge on the door.

f. Open crew door to access the two forward holes.

-NOTE-

Hinge footprint can slightly change especially if both hinges are removed at the same time to put the door to its optimal position within cabin opening (step 4).

g. Ensure the hinge is still on a similar footprint as the original hinge and back drill the two forward holes to 0.189 to 0.191 inch (4.81 to 4.86). Minimum edge distance to be 0.325 inch (8.26 mm) on hinges.

h. Remove the applicable crew door (DMC-505-A-52-10-01-00A-520A-A) and (DMC-505-A-52-10-02-00A-520A-A).

i. Remove the hinge from the door (1). Deburr all hole locations.

j. Apply sealant (C-251) to the faying surface of the hinge and position the hinge on the door.

k. Wet Install the pins (19 and 20, View E) and collar (21) with sealant (C-251) into the hinge and the door (1). Clean area of excess sealant with aliphatic naphtha (C-305).

l. Accomplish steps 12 to 17 for the lower hinge (17). When upper and lower hinges are replaced, go to step m.

m. Set aside the modified crew door and repeat steps 3 through 17 on the right-hand crew door.

18. Install door seals in accordance with TB 505-19-17 or locally bond the portion of the seal, that was removed, over the hinge attachment fastener.

19. Crew Door installation.

    a. Install left and right crew door (1, View A). Torque the nut (3) 1 to 5 inch-pounds (2.3 to 2.8 Nm) plus measured tare torque 6.5 to 60 inch-pounds (.7 to 6.8 Nm). Install cotter pin (2). Ensure the door contour is flush with the sidebody within a profile tolerance of 0.060 inch. The quantity of washers (22, 23, and 24, View F) can be modified until this value is reached. If washer quantity was modified, re-install the eyebolt (14) as per step 17.c.

    b. Install cotter pin (26, View F).

    c. Install round cap (27). As an alternate procedure, it is acceptable to coat castle nuts and cotter pins using sealant (C-251) until all sharp edges are completely covered.

-NOTE-

The striker rework and shimming are required if the door contour is not within the applicable tolerances and if the latch bolt engagement is not within tolerances.

20. Rework and add filler (shim) to strikers as required.

    a. Left-hand side upper striker (30, View G).

        (1) Remove existing screws (28), washers (29) and upper striker (30).

-NOTE-

Existing hardware is to be retained and will only be reused as determined in the later steps based on the latch bolt engagement.

(2) Retain screws (28) and washers (29).

(3) Rework the left upper striker (30) as shown in View H. Deburr any sharp edges. Touch up bare metal surfaces with primer (C-204).

(4) Install filler (31, Detail G), reworked left upper striker (30), washers (32) and screws (33). Torque screws (33) 50 to70 inch-pounds (5.6 to 7.9 Nm).

(5) Adjust striker position.

(a) To ensure proper pin engagement, measure the gap between the left upper striker (30, Section I-I) and housing (34) from the middle of latch bolt (35). Gap to be 0.120 to 0.250 inch (3.048 mm to 6.35mm) as shown.

(b) Filler (31, Section I-I) can be removed if not required. If removed, re-install left-hand side upper striker (30) using the original screws (28) and washers (29) as a unit.

-NOTE-

Screws (28 and 32) are installed into floating type nutplates (36) for striker adjustments.

(c) Ensure there is a minimum clearance of 0.050 inch (1.27 mm) between the forward and aft side of latch bolt (35, view J) and the mating left upper striker (30).

(d) Adjust left upper striker (30, Section I-I) in the inboard and outboard direction until the door contour is flush with the sidebody (37) contour within a profile tolerance of 0.250 inch (6.35 mm).

(e) Torque screws (28 or 32, View G) 50 to 70 inch-pounds (5.6 to 7.9 Nm) plus measured tare torque.

b. Right Upper striker (40, View K).

(1) Remove existing screws (38), washers (39) and upper striker (40).

-NOTE-

Existing screws (38) are to be retained and will only be reused as determined in the later steps if shim (41) is not required based on the latch bolt engagement.

(2) Retain screws (38) and washers (39).

(3) Rework the striker (40) as shown in View L. Deburr any sharp edges.

(4) Install shim (41), reworked upper striker (40), washers (42) and screws (43). Torque screws (43) 50 to 70 inch-pounds (5.6 to 7.9 nm).

-NOTE-

Screws (38 and 43) are installed into floating type nutplates (36) for striker adjustments. Dimensional requirements shown in Section I-I and View J are the same for the right upper striker.

(5) Adjust striker position.

(a) To ensure proper pin engagement, measure gap dimension between the upper striker (40) and housing (34) from the middle of latch bolt (35). Gap to be 0.120 inch to 0.250 inch (3.048 mm to 6.35mm) as shown in Section I-I. (Same as left side).

(b) Shim (41) can be removed if not required. If removed, install striker using the original screws (38) and washers (39) as a unit.

(c) Ensure there is a minimum clearance of 0.050 inch (1.27 mm) between the forward and aft side of latch bolt (35) and the mating striker (40, View J).

(d) Adjust striker (40) in the inboard and outboard direction until the door (1) contour is flush with the sidebody (37) contour within a profile tolerance of 0.250 inch (6.35 mm).

(e) Torque screws (38 or 43) 50 to 70 inch-pounds (5.6 to 7.9 nm) plus measured tare torque.

c. Lower left and right strikers (47, View M and O).

-NOTE-

Existing screws are to be retained and will only be reused as determined in the later steps if filler (41) is not required based on the latch bolt engagement.

(1) Remove screws (44, View M), washers (45), serrated washer (46) and lower striker (47).

(2) Install filler (48), lower striker (47), serrated washers (46), washers (49), and screws (50).

(3) To ensure proper pin engagement, measure the gap between the lower striker (47, Section N-N and R-R) and housing (51) from the middle of latch bolt (52).

(a) Lower left striker gap to be between 0.140 to 0.170 inch (3.56 and 4.32 mm).

(b) Lower right-hand striker gap to be between 0.095 to 0.125 inch (2.41 and 3.18 mm).

(c) Filler (48, View M) can be removed if not required. If removed, install lower striker (47) using the original screws (44) and washers (45) as a unit with serrated washers (46).

(4) Ensure there is a minimum clearance of 0.050 inch (1.27 mm) between the forward and aft side of latch bolt (52, View O) and the mating striker (47).

(a) If required, it is permissible to trim striker (47), filler (48), and floor panel (53) up to 0.050 inch (1.27 mm) to achieve specified clearance.

(b) Touch up with epoxy polyamide primer (C-204) as required.

d. Left and right mid strikers.

(1) Ensure there is a minimum clearance of 0.050 inch (1.27 mm) between the upper and lower side of the latch bolt (54, detail Q) and the mating mid striker plate (55).

(2) If required, it is permissible to trim the mating mid striker plate (55) up to 0.050 inch (1.27 mm) to achieve specified clearance.

(3) Touch up with epoxy polyamide primer (C-204).

(4) Verify latch bolt (54, Section P-P) engagement of 0.120 to 0.200 inch (3.05 to 5.08 mm).

21. Ensure doors seal properly with cabin when latched. It is permissible to apply sealant (C-251) around the mid striker plate and sidebody rivet heads to achieve proper seal. It is permissible to apply sealant to clamshell door seal at overlap with crew door if

gaps are present. Refer to TB 505-19-17 Improvement of Door Seals, for additional details.

22. It is permissible to apply petrolatum (C-008) on protruding curved surface of all latch bolts.

23. Touch up any exposed bare metal with primer and paint, as applicable, to match the surrounding surfaces. Apply topcoat, black color (no. 37038 PER FED-STD-595) on all inboard unpainted fasteners and surfaces, except omit paint on all latch mechanism parts, inner door panels and all hardware with a black oxide finish.

24. Make an entry in the helicopter logbook and historical service records indicating compliance with **PART II** of this Technical Bulletin.

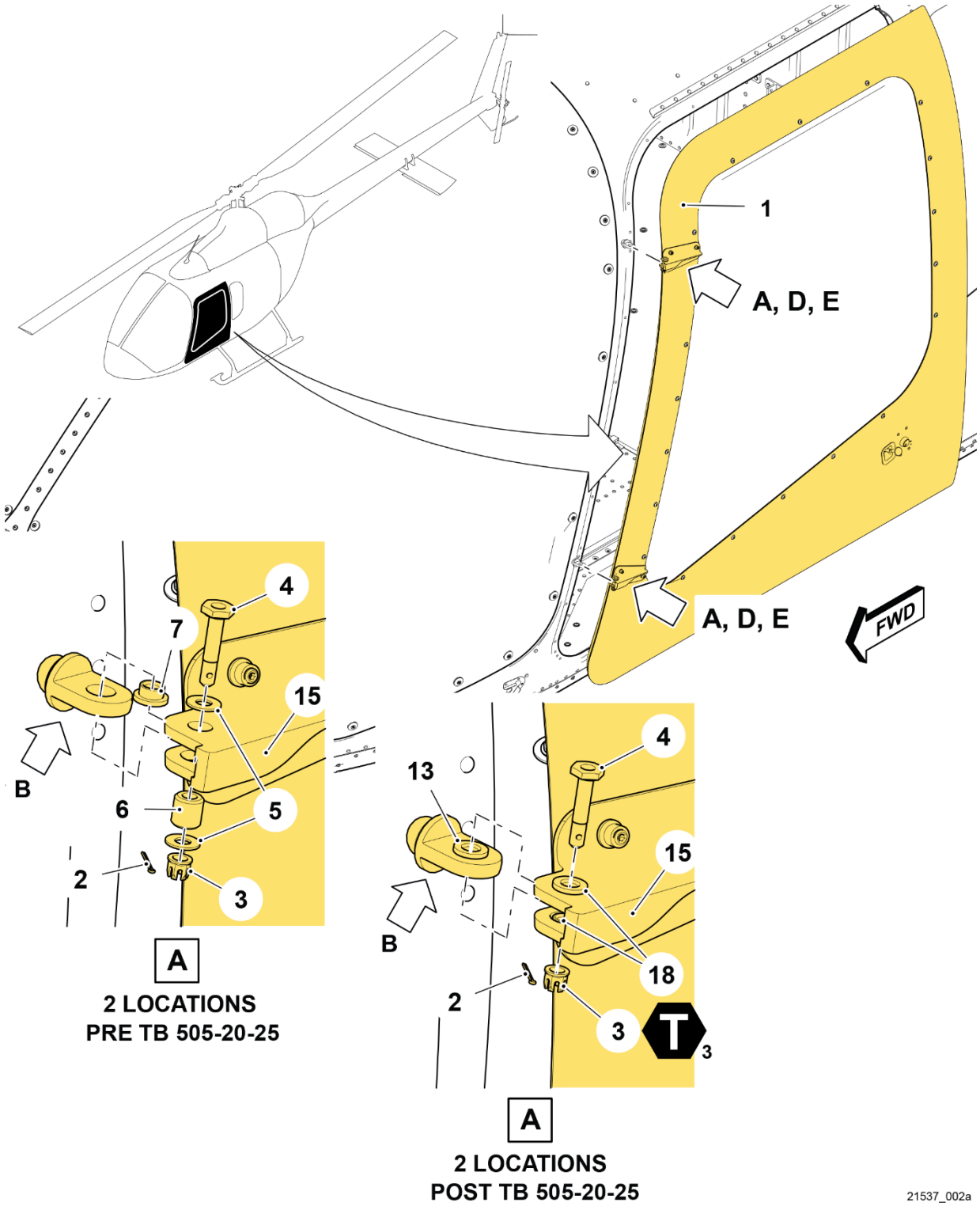

Figure 2 – Door removal / installation (Sheet 1 of 11)

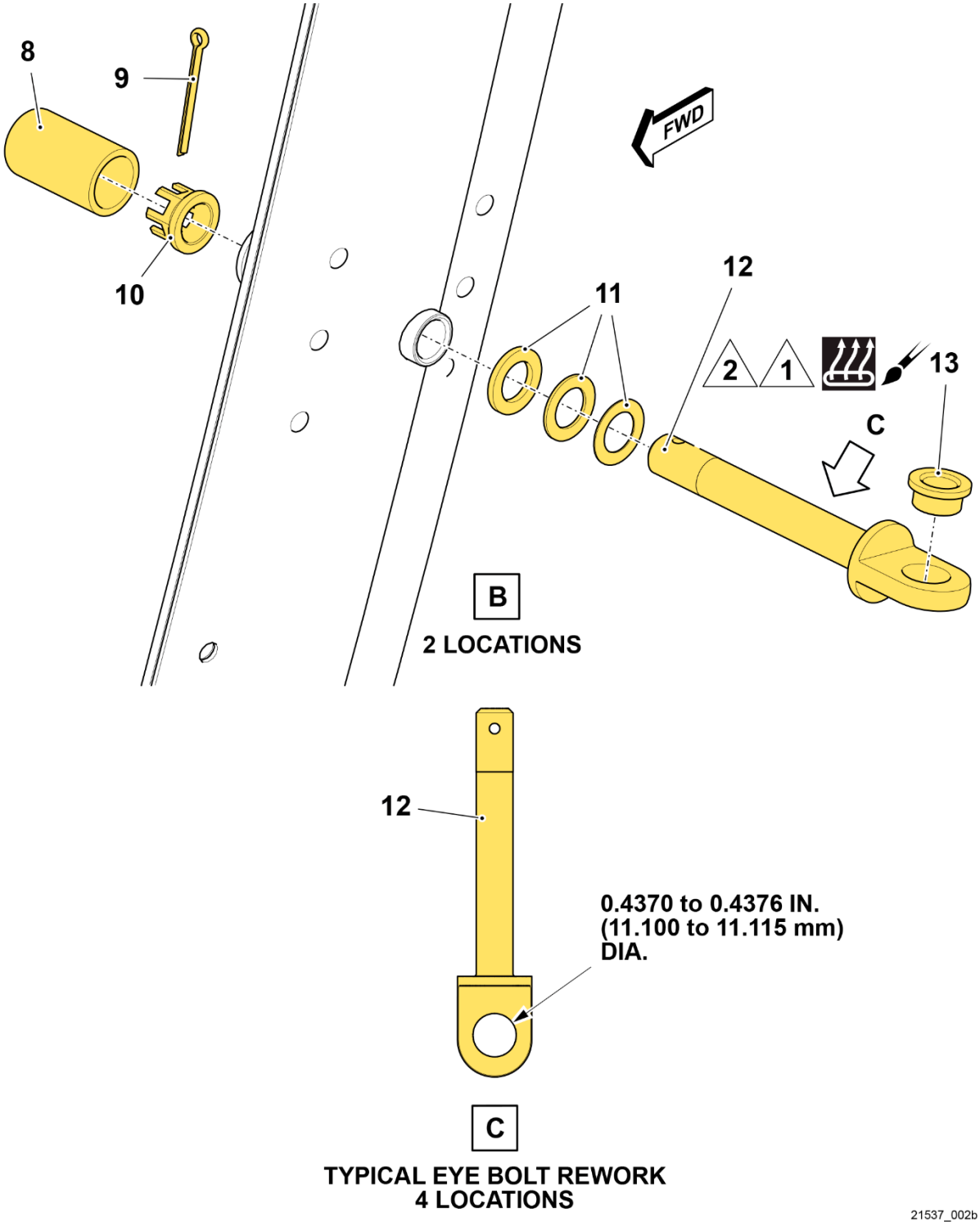

Figure 2 – Eyebolt removal and rework (Sheet 2 of 11)

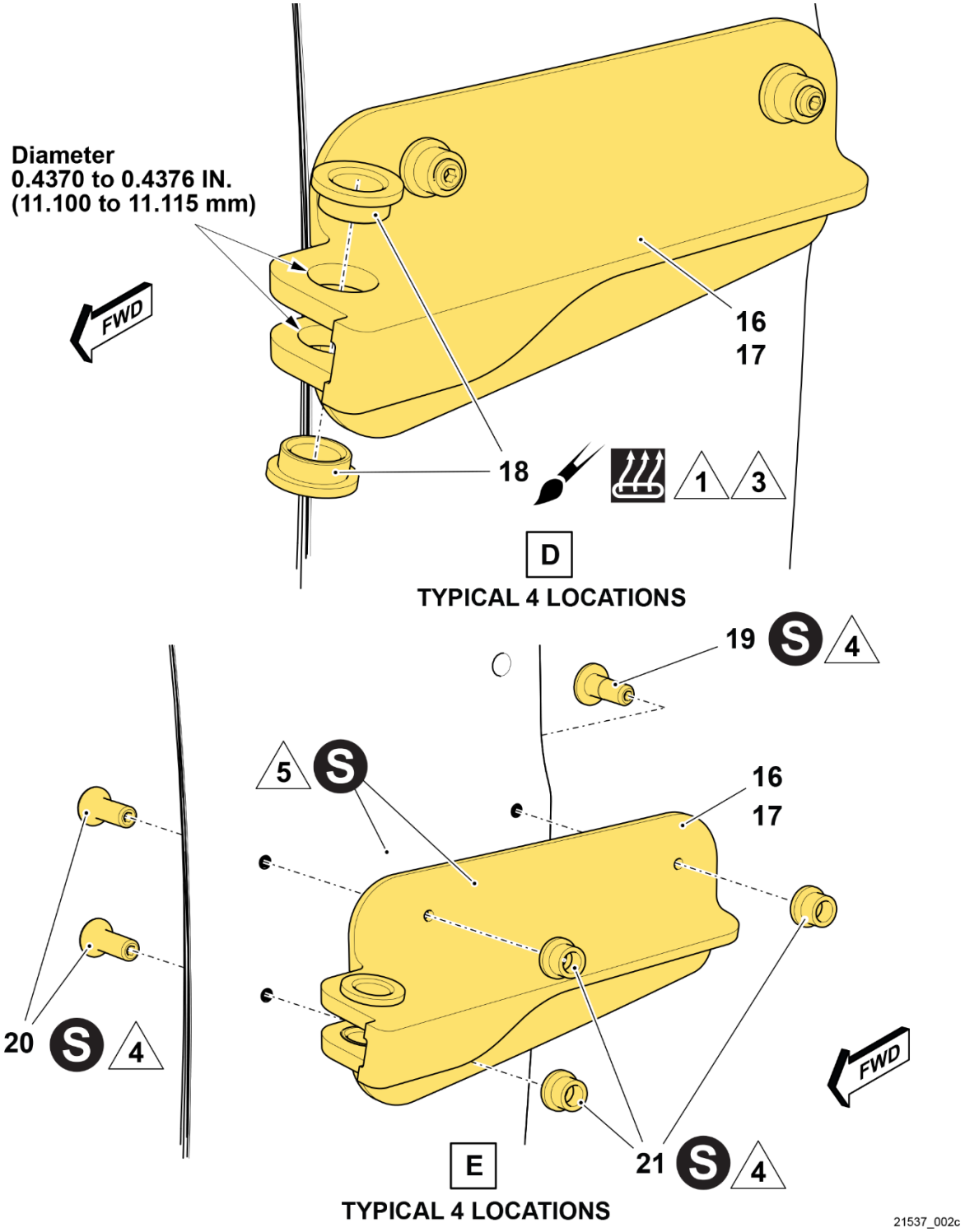

Figure 2 – Door hinge modification and installation (Sheet 3 of 11)

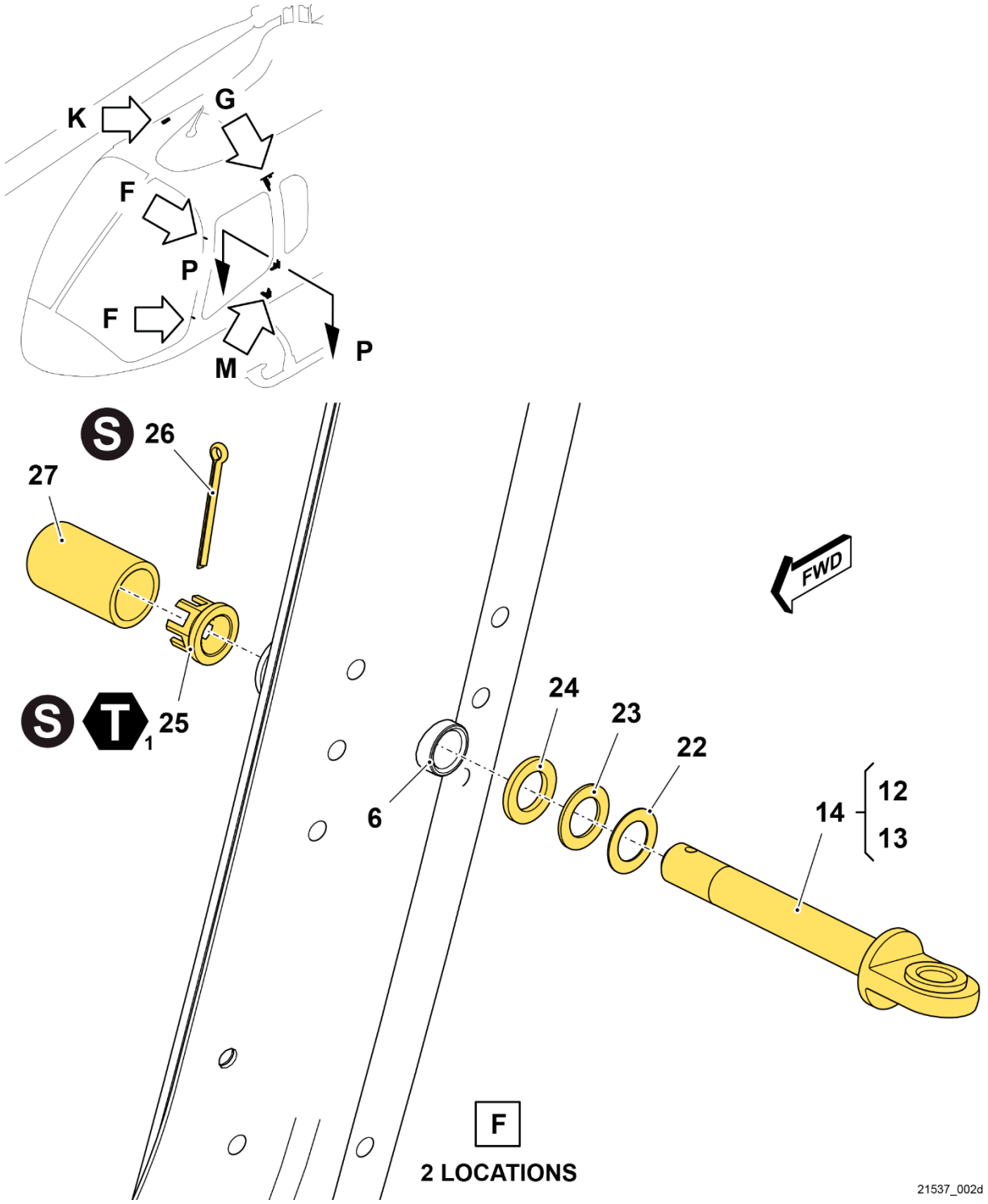

Figure 2 – Eyebolt and hinge installation (Sheet 4 of 11)

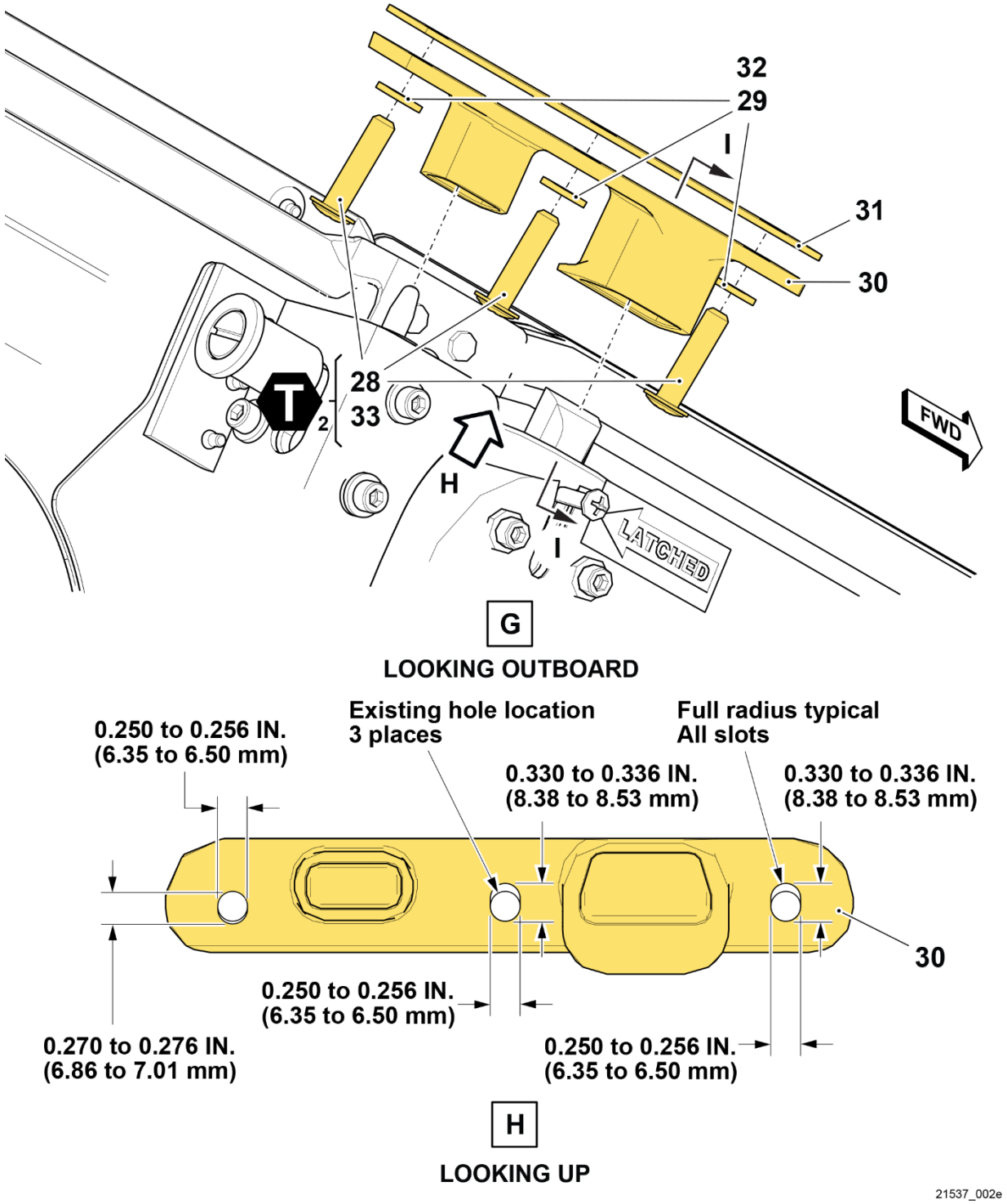

Figure 2 – Door striker rework L/H upper location (Sheet 5 of 11)

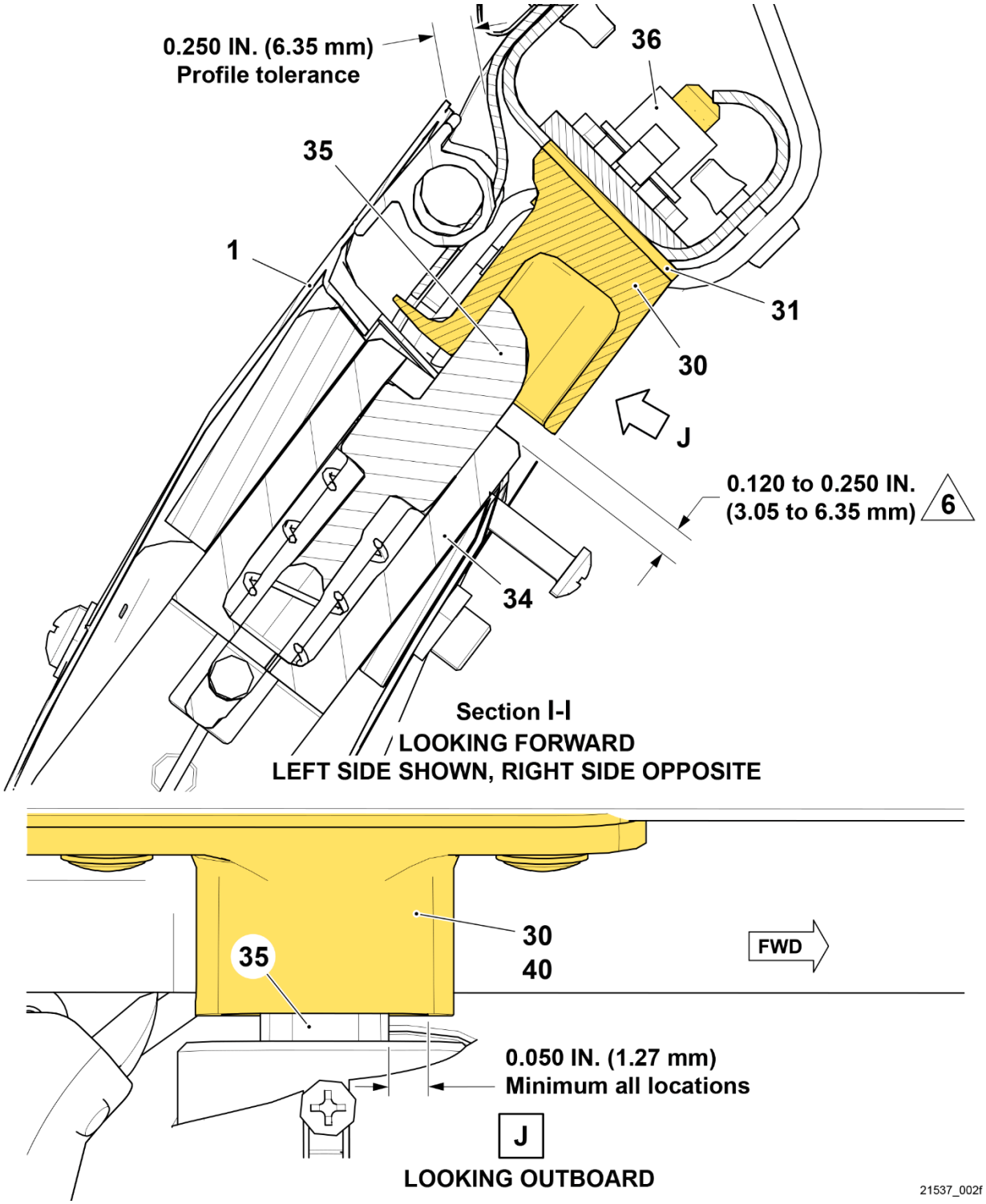

Figure 2 – Door upper left striker clearance check (Sheet 6 of 11)

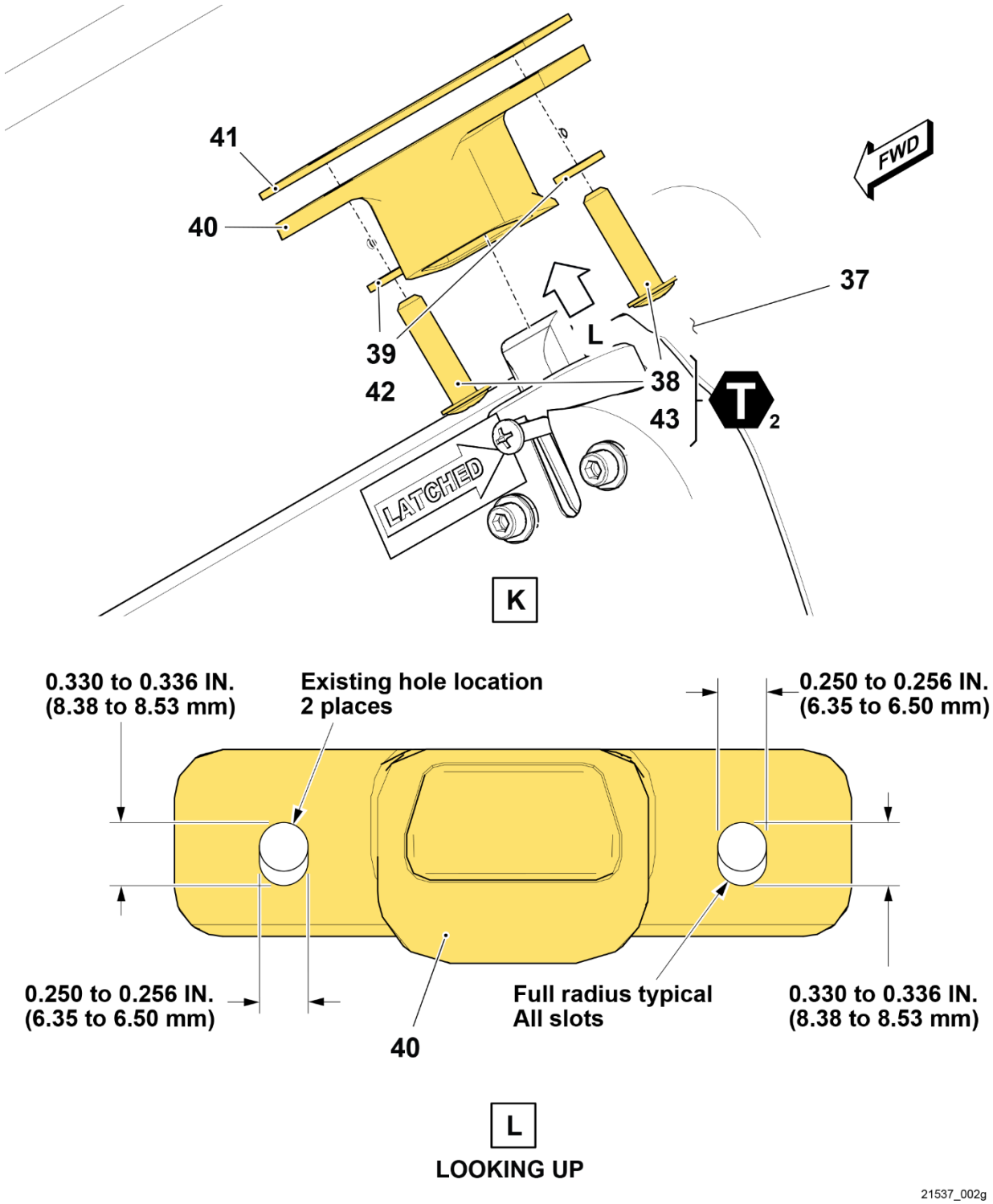

Figure 2 – Door striker rework upper right location (Sheet 7 of 11)

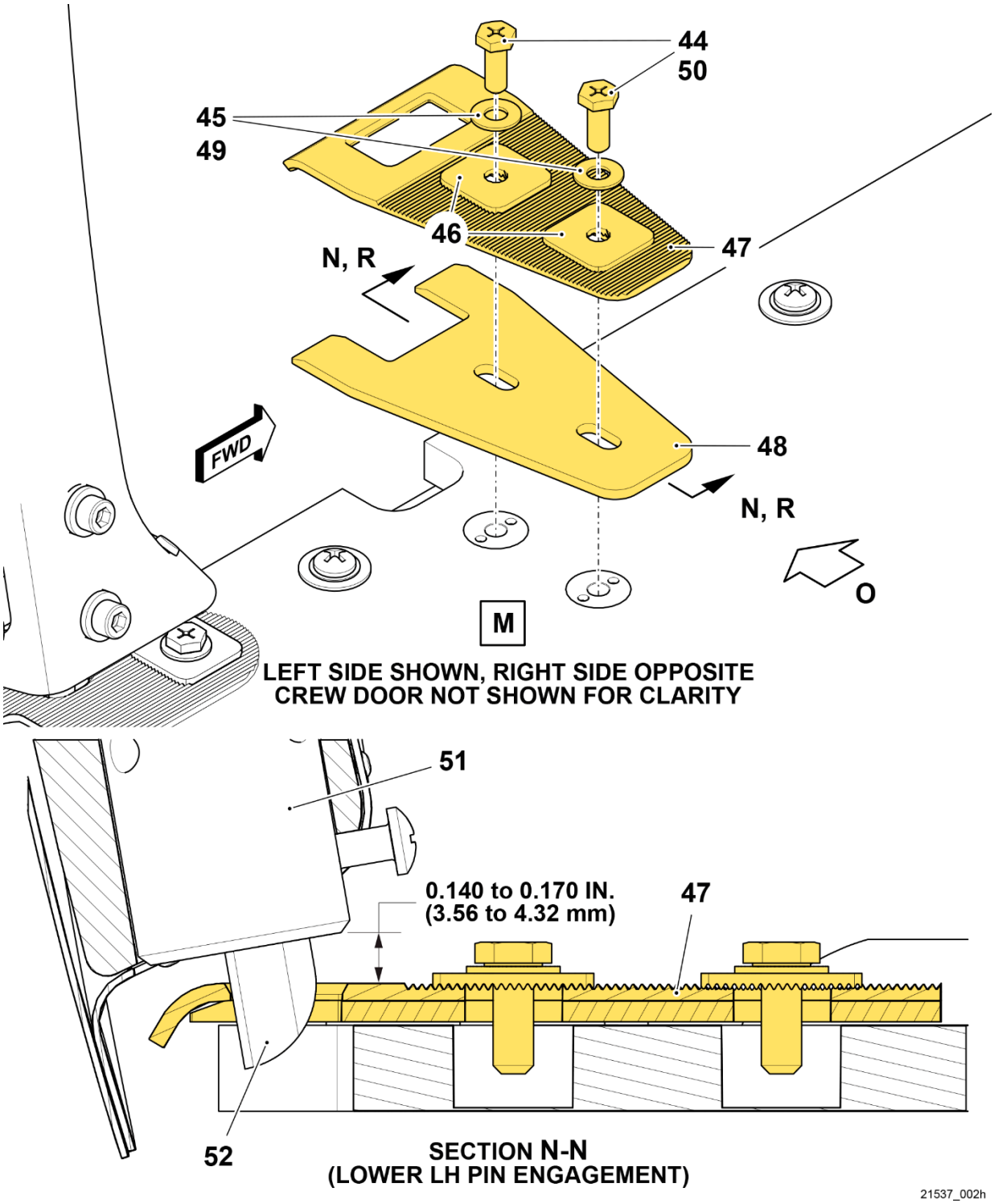

Figure 2 – Door striker rework both lower locations (Sheet 8 of 11)

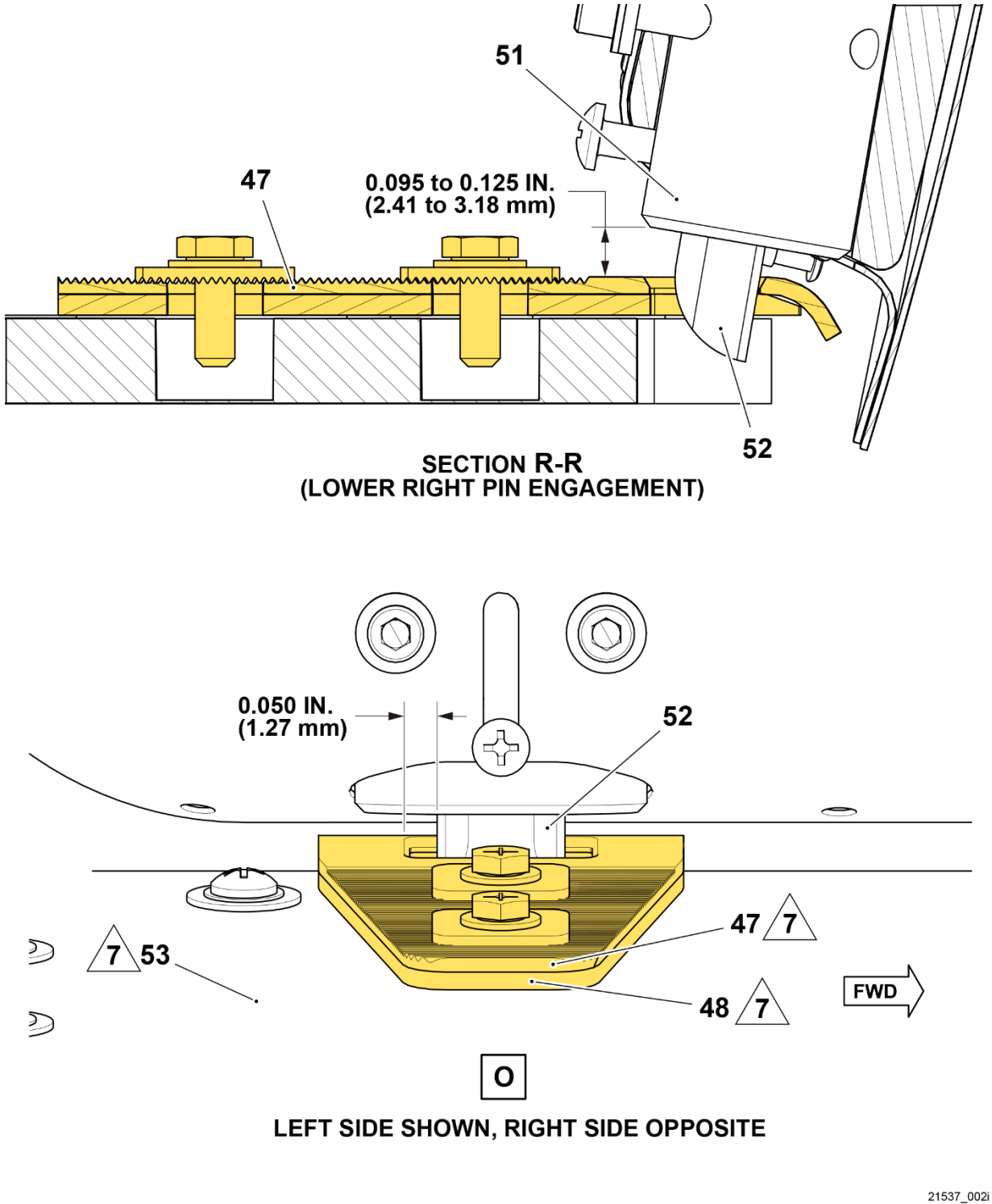

Figure 2 – Door lower strikers clearance check (Sheet 9 of 11)

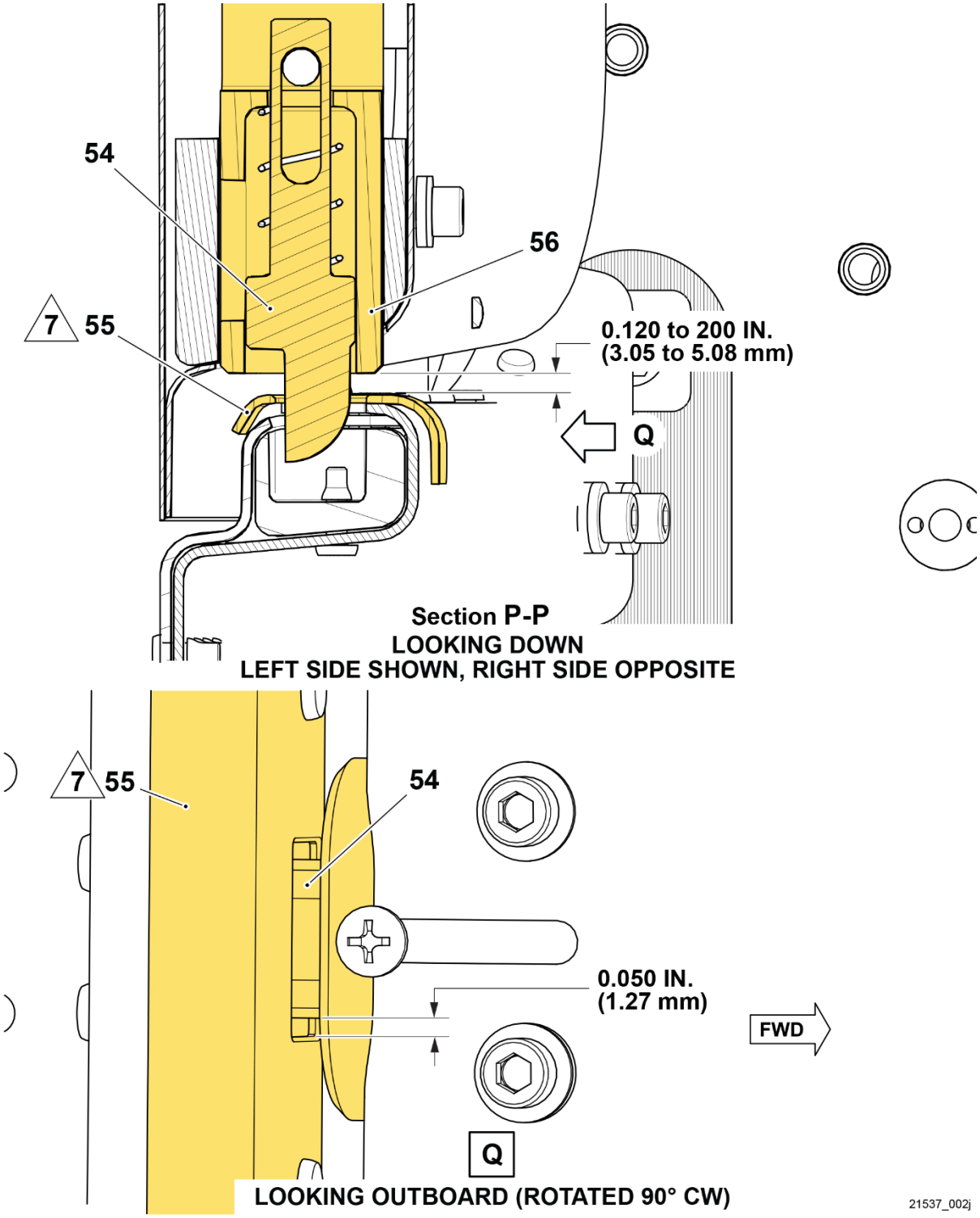

Figure 2 – Door mid striker clearance check (Sheet 10 of 11)

1. Crew door
2. Cotter pin
3. Nut
4. Bolt
5. Washer
6. Bushing
7. Bushing
8. Cap round
9. Discard cotter pin
10. Nut
11. Washer
12. Eyebolt
13. Bushing NAS77A5-019P
14. Eyebolt SLS-030-110-061
15. Hinge (existing)
16. LH Upper hinge SLS-030-110-173 (RH SLS-030-110-174)
17. LH Lower hinge SLS-030-110-175 (RH SLS-030-110-176)
18. Bushing NAS77A5-014P
19. Pin 100-161-6-3
20. Pin 100-161-6-4
21. Collar 30-296-6W
22. Washer NAS1149D0663K
23. Washer NAS1149D0632K
24. Washer NAS1149D0616K
25. Nut 90-100C6
26. Cotter Pin MS24665-285
27. CAP, ROUND 30-331-050-100
28. Screw Ref
29. Washer REF
30. Striker
31. Filler SLS-030-110-177
32. Washer NAS1149C0463R
33. Screw 120-225C4T16P
34. Housing REF
35. Latch Bolt REF
36. Nutplate
37. Fuselage sidebody REF
38. Screw REF
39. Washer REF
40. Upper Right Hand striker REF
41. Shim SLS-030-110-179
42. Washer NAS1149C0463R
43. Screw 120-225C4T16P
44. Screw REF
45. Washer REF
46. Serrated washer REF
47. Lower striker REF
48. Filler SLS-030-110-241
49. Washer NAS1149D0332J
50. Screw NAS1802-3-8P
51. Housing REF
52. Latch bolt REF
53. Floor Panel REF
54. Latch bolt REF
55. Mid striker Plate
56. Housing

HEAT APPLICATION (275°F/135°C MAX)

WET UNREDUCED PRIMER (C-204)

SEALANT (C-251)

T1 20 TO 25 IN-LBS (2.3 TO 2.8 Nm)

T2 50 TO 70 IN-LBS (5.6 TO 7.9 Nm)

T3 1 TO 5 IN-LBS (0.1 TO 0.6 Nm)

NOTES

1. Wet install bushing using epoxy polyamide primer C-204.
2. When applying heat, the eyebolt must not exceed 275 degrees Fahrenheit for a maximum of 2 hours.
3. Temperature of the hinge must not exceed 300 degrees Fahrenheit.
4. Wet install using sealant C-251.
5. Apply sealant C-251 on faying surfaces between door outer skin and hinge.
6. Dimensional requirement is the same for right-hand side upper striker.
7. If required, it is permissible to trim striker (47 or 55), filler (48), and floor panel (53) up to 0.050 inch (1.27 mm) to achieve specified clearance.

21537_002k

Figure 2 – Part list, Symbols and Notes (Sheet 11 of 11)