A Textron Company

ALERT SERVICE BULLETIN **505-26-52**

9 March 2026

MODEL AFFECTED: **505**

SUBJECT: **AFT MOVABLE BALLAST BOX ASSEMBLY SLS-706-201-007, SLS-706-201-207, AND SLS-706-201-207FM BALLAST WEIGHTS, CEASE USE OF BALLAST WEIGHTS AND INSPECTION OF DOOR ASSEMBLY.**

HELICOPTERS AFFECTED: **Serial numbers 65011 and subsequent.**

COMPLIANCE: **PART I** - Prior to next flight.

PART II – Within 33 flight hours following accomplishment of **PART I** of this bulletin.

DESCRIPTION:

Bell was made aware of a failure of a hinge assembly SLS-706-201-169 of an aft ballast box assembly SLS-706-201-207 which is part of the new movable ballast kit SLS-706-201-201 and helicopters modified per the Alert Service Bulletin 505-25-44-RA. The failure was noted during the post flight check of the helicopter with no anomalies noted during the preflight check requirements of the Flight Manual Supplement BHT-505-FMS-7. A failure of the aft movable ballast box door assembly could allow ballast weights to depart the box, potentially striking the tail rotor assembly causing loss of tail rotor thrust and control of the helicopter.

PART I of this Alert Service Bulletin (ASB) mandates an **immediate** stoppage of the use of the ballast weights within the aft movable ballast box assembly.

PART II of this ASB provides instructions to perform a detailed visual inspection (DVI) of the aft movable ballast box assembly including the latching mechanism, safety features of the latch pin and safety pin, and the door hinge for any signs of damage or cracks.

Approved for public release.

This is an interim measure to address the potential safety of flight concern while Bell investigates the root cause of the hinge failure and implements corrective actions allowing the return of use of ballast weights in the aft movable ballast box assembly.

Applicability of this bulletin to any spare part shall be determined prior to its installation on an affected helicopter.

APPROVAL:

The engineering design aspects of this bulletin are Transport Canada Civil Aviation (TCCA) approved.

CONTACT INFO:

For any questions regarding this bulletin, please contact:

Bell Product Support Engineering
Tel: 1-450-437-2862 / 1-800-363-8023 / productsupport@bellflight.com

MANPOWER:

Approximately 0.25 man-hours are required to complete **PART I** of this bulletin.
Approximately 1 man-hour is required to complete **PART II** of this bulletin.
This estimate is based on hands-on time and may vary with personnel and facilities available.

WARRANTY:

There is no warranty credit applicable for parts or labor associated with this bulletin.

MATERIAL:

Part Number	Nomenclature	Qty (Note)
LOCALLY MANUFACTURE	PLACARD	1 (1)

NOTE 1: Locally manufacture using details in Figure 1.

Consumable Material:
The following material is required to accomplish this bulletin, but may not require ordering, depending on the operator's consumable material stock levels. This material may be obtained through your Bell Supply Center.

Part Number	Nomenclature	Qty (Note)	Reference *
2010-06640-00	Edge Sealer	8 OZ (1)	C-349

Part Number	Nomenclature	Qty (Note)	Reference *
2100-06673-00	Isopropyl Alcohol	1 GAL (1,2)	C-385
Commercially Available	Cloth, Cleaning, Low-Lint	A/R	C-516

* C-XXX numbers refer to the consumables list in the BHT-ALL-SPM, Standard Practices Manual

NOTES:

1. Quantity indicated is the format that the product is delivered in. Actual quantity required to accomplish the instructions in this bulletin may be less than what has been delivered.
2. Toluene 2110-06227-00 (C-306) or Ethyl Alcohol (C-339) can be used as an alternate.

SPECIAL TOOLS:

None required.

WEIGHT AND BALANCE:

PART I: May be affected if weights are installed in the aft movable ballast box assembly SLS-706-201-207 or SLS-706-201-207FM. Adjust fixed ballast as necessary for the helicopter to remain within the Center of Gravity (CG) flight envelope.

PART II: Negligible.

ELECTRICAL LOAD DATA:

Not affected.

REFERENCES:

505-MM Maintenance Manual, Chapter 8.
BHT-ALL-SPM, Standard Practice Manual, Chapter 8.
ASB 505-25-44-RA, Alert Service Bulletin.
BHT-505-FMS-7, Flight Manual Supplement, Movable Ballast Kit (SLS-706-201).
OSN 505-26-08, Operation Safety Notice, Preflight Inspection Requirements of Movable Ballast Kit (SLS-706-201).

PUBLICATIONS AFFECTED:

None affected.

ACCOMPLISHMENT INSTRUCTIONS:

PART I – Cease use of ballast weights in the aft movable ballast box assembly.

WARNING

For continued helicopter operations, remove all ballast weights from the aft movable ballast box assembly.

1. Prepare the helicopter for maintenance.

2. Verify if the movable ballast kit SLS-706-201-XXX is installed on the helicopter. Helicopters may have a modified SLS-706-201-001 kit per the ASB 505-25-44-RA, which would be applicable.

a. If the movable ballast kit **is installed**, remove all ballast weights from the aft movable ballast box assembly (DMC-505-A-08-40-40-00A-520A-A). Go to step 3.

b. If the movable ballast kit **is not installed**, go to step 4, indicating the ASB is not applicable to the helicopter.

3. Prepare decals (7 and 8, Figure 1).

   a. Letters to be gloss RED on WHITE background in Arial Black size 14 font.

   b. Clean aft movable ballast door assembly surface using cleaning cloth (C-516) wetted with isopropyl alcohol (C-385).

   c. Install decals (7 and 8) on aft movable ballast box door assembly (BHT-ALL-SPM, Chapter 8, Paragraph 8-24).

   d. Apply clear edge sealer (C-349) over the decals (7 and 8) and around edges.

   e. Verify CG calculations to ensure the installed ballast is within the CG flight envelope (DMC-505-A-08-40-10-00A-169A-A). Adjust as necessary.

4. Make an entry in the helicopter logbook and historical service records indicating compliance with **PART I** of this Alert Service Bulletin.

-NOTE-

For helicopters with the movable ballast kit SLS-706-201 installed, perform **PART II** of this ASB within the required **COMPLIANCE** period.

PART II – Detailed visual inspection of the aft movable ballast box assembly.

1. Prepare the helicopter for maintenance.

CAUTION

All helicopters with the Movable Ballast Kit SLS-706-201 installed have preflight check requirements of the movable ballast box assemblies included in BHT-505-FMS-7. Bell has highlighted the importance of inspecting the aft movable ballast box assembly with the publication of the Operational Safety Notice (OSN) 505-26-08.

2. Do a detailed visual inspection of the aft movable ballast box assembly door assembly as follows:

   a. Inspect the door assembly (9, Figure 1) hinge for any signs of plastic deformation, working rivets, or cracks.

   b. Inspect the door latching mechanism for any signs of damage, working rivets, and proper functionality of the latching mechanism including the capability to install the latch pin (4) when the door has been latched.

   c. Inspect the proper functionality of the safety pin (5) and its full engagement into the aft movable ballast box assembly when fully seated.

   d. Inspect for proper installation and bonding of grommet (10) to aft movable ballast box assembly.

   e. If no anomalies are noted following the detailed visual inspection in steps 2.a through 2.d., go to step 3.

   f. If any anomalies are noted during the inspection requirements above, report the findings to Bell Product Support Engineering at productsupport@bellflight.com including the following information:

      (1) In the **subject line** of the email, include the following information:

         (a) The helicopter model.

         (b) The helicopter serial number.

         (c) The text ASB 505-26-52.

         (d) The Total Time In Service (TTIS) of the helicopter.

         (e) The text AFFECTED.

Example email subject line:
505 (65005) – ASB 505-26-52 - (TTIS 1350 hours) - AFFECTED

(2) In the **body** of the email, include the following:

(a) Confirmation if ASB 505-25-44-RA was applied to the aft movable ballast box assembly (**YES** or **NO**).

(b) A description of the anomaly (anomalies) found.

(c) Photos of the anomaly (anomalies) found.

(d) Total Time In Service (TTIS) of the aft movable ballast box assembly.

(3) Remove the aft movable ballast box door assembly (9) by removing attaching hardware (1 and 2), door latch attachment (3), latch pin (4), safety pin (5), and the rivets (6).

(4) Go to step 3.

3. Make an entry in the helicopter logbook and historical service records indicating compliance with **PART II** of this Alert Service Bulletin.

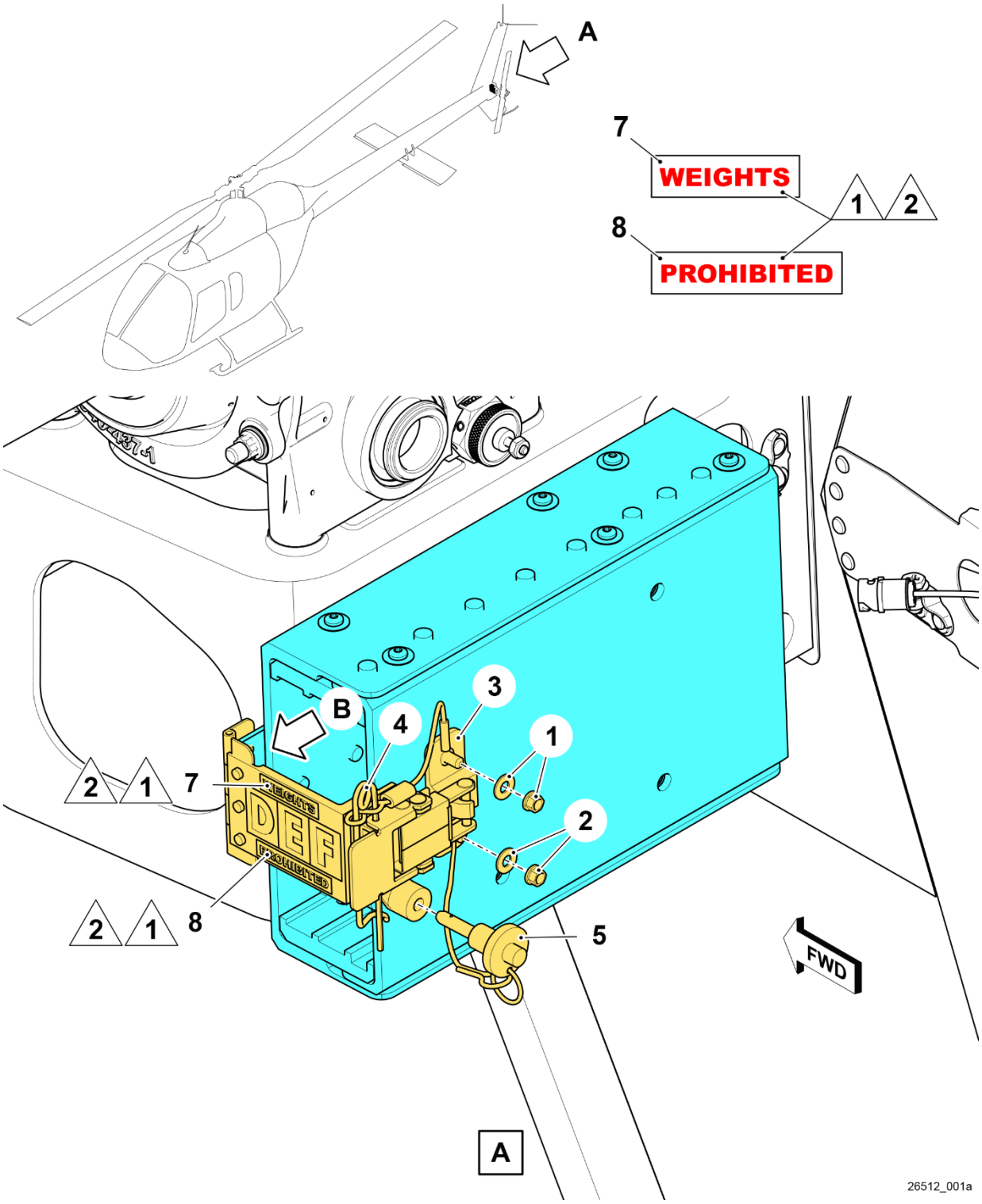

Figure 1 – Aft Movable Ballast Box Assembly (Sheet 1 of 2)

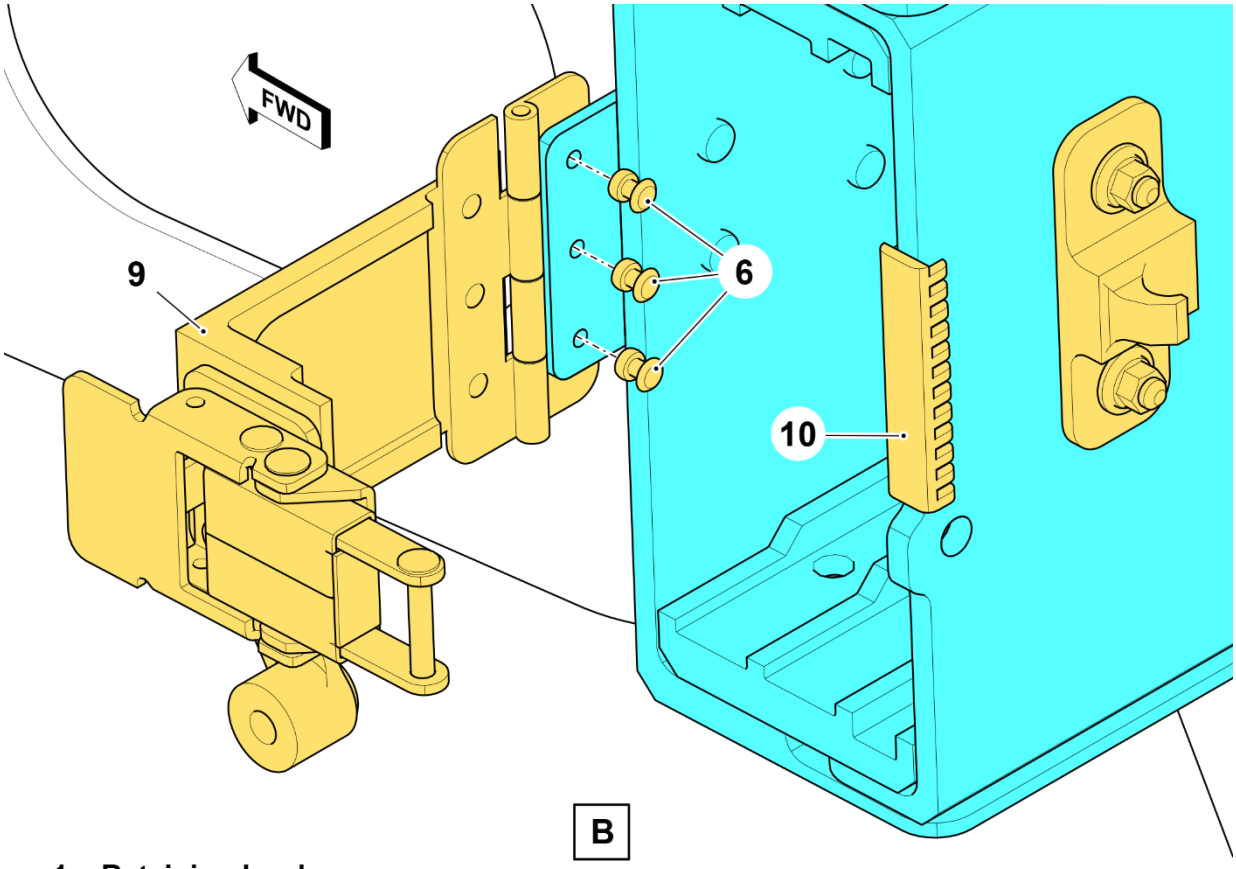

1. Retaining hardware
2. Retaining hardware
3. Door latch attachment
4. Latch pin
5. Safety pin
6. Rivet
7. Decal
8. Decal
9. Door
10. Grommet

NOTES

1 Letters to be gloss red on white background in arial black size 14 font.

2 Decals shall have a minimum of 0.06 inch (1.5 mm) edge distance all around characters.

26512_001b

Figure 1 – Aft Movable Ballast Box Assembly (Sheet 2 of 2)