BELL 206A/206B

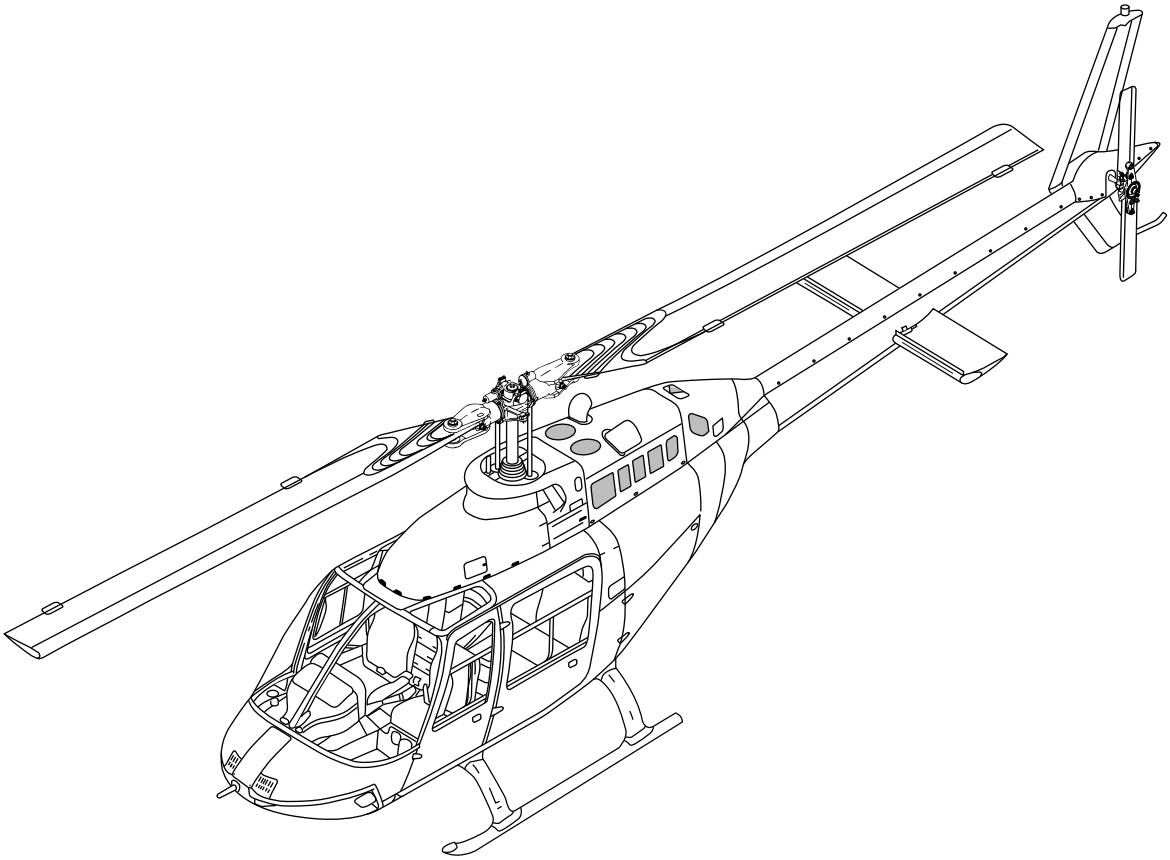

MAINTENANCE MANUAL

VOLUME 1

GENERAL INFORMATION

NOTICE

The instructions set forth in this manual, as supplemented or modified by Alert Service Bulletins (ASB) or other directions issued by Bell Textron Inc. and Airworthiness Directives (AD) issued by the applicable regulatory agencies, shall be strictly followed. This manual covers 206A, 206B, and 206B3 helicopters SN 4 through and including current production. TH-57/TH-67 helicopters are covered along with the use of manual supplements. 206B1 helicopters are not covered by this manual.

FOR MODELS 206A, 206B, AND 206B3 HELICOPTERS

COPYRIGHT NOTICE
COPYRIGHT 2024
BELL TEXTRON INC. AND
BELL TEXTRON CANADA LIMITED.

ALL RIGHTS RESERVED

POST OFFICE BOX 482 • FORT WORTH, TEXAS 76101

7 JANUARY 1998

REVISION 18 — 02 DECEMBER 2024

Export Classification C, ECCN EAR99

PROPRIETARY RIGHTS NOTICE

These data are proprietary to Bell Textron Inc. Disclosure, reproduction, or use of these data for any purpose other than helicopter operation or maintenance is forbidden without prior written authorization from Bell Textron Inc.

DESTINATION CONTROL STATEMENT

WARNING — This document contains technical data whose export is restricted by the Arms Export Control Act (Title 22, U.S.C., Sec 2751, et. seq.) or the Export Administration Act of 1979, as amended, Title 50, U.S.C., App. 2401 et. seq. Violations of these export laws are subject to severe criminal penalties. Disseminate in accordance with provisions of DoD Directive 5230.25.

WARNING

THIS MANUAL APPLIES ONLY TO HELICOPTERS AND COMPONENTS MAINTAINED IN ACCORDANCE WITH BELL TEXTRON INC. APPROVED PROCEDURES USING BELL APPROVED PARTS.

ALL INSPECTION, REPAIR AND OVERHAUL PROCEDURES PUBLISHED BY BELL, INCLUDING PART RETIREMENT LIFE, ARE BASED SOLELY ON THE USE OF BELL PARTS THAT HAVE BEEN MAINTAINED USING BELL APPROVED DATA. THE DATA PUBLISHED HEREIN OR OTHERWISE SUPPLIED BY BELL IS NOT APPLICABLE TO NON-BELL PARTS OR PARTS THAT HAVE BEEN REPAIRED USING DATA AND/OR PROCESSES NOT APPROVED BY BELL.

BELL IS NOT RESPONSIBLE FOR ANY PART OTHER THAN THOSE THAT IT HAS APPROVED.

BEFORE PERFORMING ANY PROCEDURE CONTAINED IN THIS MANUAL YOU MUST INSPECT THE AFFECTED PARTS AND RECORDS FOR EVIDENCE OF ANY MANUFACTURE, REPAIR, REWORK OR USE OF A PROCESS NOT APPROVED BY BELL.

IF YOU IDENTIFY OR SUSPECT THE USE OF PARTS NOT AUTHORIZED BY BELL, EITHER REMOVE THE AFFECTED ITEM FROM THE AIRCRAFT OR OBTAIN INSTRUCTIONS FOR CONTINUED AIRWORTHINESS FROM THE MANUFACTURER OR THE ORGANIZATION THAT APPROVED THE REPAIR.

CUSTOMER SUPPORT AND SERVICES

Flying smart means that no matter where you are, or what time it is, you can make a call and get additional information, clarification, or advice on a technical or operational issue concerning your helicopter or information contained in our Technical Publications. Product Support Engineering (PSE) is just a phone call away and may be contacted as follows:

Commercial Models

Phone: 450-437-2862 or 800-363-8023 (U.S./Canada)

Fax: 450-433-0272

E-mail: productsupport@bellflight.com

Model 210, HUEY II and All Bell's Active and Surplus Military Medium Helicopter Models

Phone: 817-280-3548

Fax: 817-280-2635

E-mail: mts-medium@bellflight.com

Model OH-58, TH-67, TH-57, Both Active and Surplus Military

Phone: 817-280-3548

Fax: 817-280-2635

E-mail: mts-light@bellflight.com

For additional information on Customer Support and Services as well as Product Support Engineering (PSE) and your local Customer Service Engineering (CSE) network, please access https://www.bellflight.com/support.

LOG OF REVISIONS

Insert latest revision pages and dispose of superseded ones.

On a revised page, the text and/or illustration affected by the latest revision is shown by a vertical line. A revised page with only a vertical line next to the page number indicates that text has shifted or that non-technical correction(s) were made on that page.

Original	0	07 JAN 98
Revision	1	21 MAY 02
Revision	2	07 JUN 02
Revision	3	12 JUL 04
Revision	4	28 APR 06
Revision	5	31 JUL 09
Revision	6	07 DEC 09
Revision	7	14 APR 10
Revision	8	30 JUN 10
Revision	9	27 SEP 10
Revision	10	08 APR 11
Revision	11	13 OCT 11
Revision	12	01 JUN 12
Revision	13	07 NOV 13
Revision	14	30 APR 13
Revision	15	02 JUN 15
Revision	16	25 JUN 19
Revision	17	10 APR 20
Revision	18	02 DEC 24

LOG OF PAGES

Page No.	Rev No.
VOLUME 1	
Cover	18
Title	18
PN	17
Warning	17
CSS	17
A – F	18
Help	13
Customer Feedback	17
Helicopter Sales Notice	17
Warranty 1 – 3	17
BR	17
TR	17
i – ii	16
Chapter 1	
1/2	6
3	12
4 – 8	6
9/10	6
Chapter 4	
1 – 2	16
3/4	16
5 – 14	16
Chapter 5	
1 – 2	17
3/4	17
5 – 8	14
9/10	14
11	14
12	17
13 – 16	14
17/18	14
19 – 20	14
21 – 22	17
23 – 25	18
26 – 27	17
28 – 29	14
30	17
31	18
32	17
33	18
34	14
35/36	14
37 – 38	14
39	17
40 – 45	14
46	17
47 – 48	14
49/50	14
51 – 54	14
55/56	14
57	14
58 – 59	18
60 – 62	14
63/64	14
65	14
66	17
67	18
68 – 69	17
70	14
71/72	14
73	18
74 – 84	14
85/86	15
87 – 90	14
91/92	14
93/94	14
95	17
96	18
97 – 99	14
100	18
101 – 106	14
107/108	14
109 – 110	14
111/112	18
113/114	17
115	14
116	18
117 – 118	14
119/120	14
121 – 125	14
126	17
127 – 130	18
131/132	14
133	14
134	17
135/136	14
137/138	14
139	17
140 – 142	14
143	17
144	18
145 – 146	14
147/148	18
149/150	14
151	18
152	14
153	14
154	17

LOG OF PAGES (CONT)

Page No.	Rev No.
154A – 154B	18
155/156	14
157	14
158	17
159 – 160	14
161/162	14
163 – 166	14
167/168	14
169 – 170	14
171/172	14
173 – 174	14
175/176	14
177 – 179	14
180	17
181/182	14
183 – 196	14
197/198	14
199/200	14
201 – 204	17
Index MM	
1 – 16 (Deleted)	5
VOLUME 2	
Cover	18
Title	18
PN	17
Chapter 6	
1/2	0
3	0
4 – 5	17
6	0
7/8	0
Chapter 7	
1/2	6
3 – 4	6
5/6	6
Chapter 8	
1 – 16	3
17	17
18 – 22	3
23	9
24 – 32	3
33/34	17
Chapter 9	
1/2	6
3 – 4	6
Chapter 10	
1/2	18
3 – 5	6
6	18
Chapter 11	
1/2	6
3 – 13	6
14	17
15 – 16	6
17 – 18	17
19/20	17
Chapter 12	
1	4
2	10
3/4	4
5 – 6	4
7/8	4
9 – 14	4
15/16	4
17	17
18 – 24	4
25 – 26	8
27/28	4
29 – 30	4
31/32	14
33	10
34	4
35	9
36 – 37	17
38	4
39/40	17
41 – 44	4
45/46	4
VOLUME 3	
Cover	18
Title	18
PN	18
Chapter 18	
1 – 2	0
3/4	18
5 – 24	0
25/26	0
27 – 34	0
35 – 36	4
37 – 38	0
38A/38B	4
39 – 58	0
59 – 60	4
60A/60B	4
61 – 68	0
68A/68B	18
69 – 70	18
71 – 72	4
73	0
74	14
75 – 78	0
79 – 80	4
Chapter 21	
1 – 14	6
15/16	6
17 – 20	6
Chapter 25	
1 – 8	6
9/10	6
Chapter 26	
1/2	6
3 – 4	6
5/6	6
VOLUME 4	
Cover	18
Title	18
PN	17
Chapter 28	
1 – 2	18
2A/2B	17
3 – 4	17
5	0
6	8
7 – 8	17
8A – 8B	18
9 – 11	18
12 – 17	17
18 – 20	0
18 – 22	18
22A – 22B	18

Export Classification C, ECCN EAR99

LOG OF PAGES (CONT)

Page No.	Rev No.
23	0
24	17
24A/24B	17
25 – 26	17
26A/26B	18
27– 28	18
28A– 28B	18
28C/26D	18
29	18
30– 31	0
32	17
32A/32B	18
33	17
34	18
34A/34B	18
35 – 40	0
41/42	11
Chapter 29	
1	18
2	17
3 – 8	0
9 – 10	5
10A/10B	10
11	5
12	10
12A/12B	10
13	17
14	5
14A – 14D	17
15	10
16 – 17	5
18	17
18A – 18B	18
19 – 20	18
20A	18
20B	15
21	13
22 – 24	10
24A/24B	10
25 – 30	0
31	17
32	11
33/34	8
VOLUME 5	
Cover	18
Title	18
PN	17

Page No.	Rev No.
Chapter 30	
1/2	6
3/4	6
Chapter 32	
1 – 2	17
2A/2B	17
3	0
4	8
5	18
6 – 14	0
15 – 16	17
16A/16B	17
17 – 22	0
23/24	17
25 – 26	0
27/28	0
29	0
30	17
31 – 47	0
48	17
49 – 54	0
Chapter 52	
1 – 2	17
2A/2B	8
3	8
4	0
4A/4B	8
5 – 6	0
7	17
8 – 22	0
23 – 26	17
27	8
28	0
29 – 30	8
30A/30B	8
31 – 32	0
33 – 34	8
35 – 38	17
38A – 38B	17
39 – 42	0
43/44	0
Chapter 53	
1 – 10	4
11/12	17
13 – 22	4
23	8

Page No.	Rev No.
24 – 27	4
28 – 29	17
30	4
31/32	4
33 – 36	4
37/38	4
39 – 40	17
VOLUME 6	
Cover	18
Title	18
PN	17
Chapter 62	
1 – 2	18
2A/2B	18
3	17
4	18
5	18
6 – 7	17
8	0
9 – 11	18
12	17
13	0
14 – 16	17
16A/16B	17
17 – 19	0
20 – 24	17
24A – 24B	17
25 – 32	18
33 – 35	17
36	0
37 – 38	17
38A/38B	18
39	17
40 – 42	0
43	17
44	14
45	17
46	14
46A – 46B	14
47 – 50	18
51	17
52 –55	0
56	17
57	0
58	11
58A/58B	11
59 – 60	0

LOG OF PAGES (CONT)

Page No.	Rev No.
61/62	0
Chapter 63	
1 – 2	17
3/4	9
5 – 7	9
8 – 15	6
16	12
17 – 19	6
20 – 22	17
23 – 24	6
25	17
26 – 30	6
31 – 32	17
33 – 43	6
44 – 47	17
48 – 50	6
51	17
52 – 55	6
56	10
57 – 60	6
VOLUME 7	
Cover	18
Title	18
PN	17
Chapter 64	
1/2	17
3/4	6
5 – 8	17
9	6
10 – 15	17
16 – 20	6
21 – 22	17
22A/22B	17
23 – 24	17
25	6
26	17
27	6
28 – 32	17
Chapter 65	
1	10
2	18
2A/2B	6
3	0
4	10
5 – 12	0
13/14	0
15 – 16	0
17	17
18	0
18A – 18B	18
18C/18D	18
19 – 20	10
21	0
22	18
22A/22B	18
23	18
24	6
24A – 24C	6
24D	10
25	10
26	18
26A/26B	8
27 – 28	18
28A – 28B	6
28C/28D	6
29	17
30	0
30A/30B	10
31	18
32	0
33 – 34	17
34A/34B	17
35	18
36	18
36A/36B	18
37	6
38	18
38A	7
38B	18
38C	6
38D	7
38E – 38I	6
38J	10
38K/38L	8
39 – 41	17
40	18
42	17
43 – 46	0
44	18
44A/44B	18
45 – 46	18
46A/46B	18
47	18
48	17
49	18
50	17
51	18
52	18
52A – 52B	17
VOLUME 8	
Cover	18
Title	18
PN	17
Chapter 67	
1 – 3	8
4	17
4A/4B	17
5 – 8	0
9	18
10	18
10A/10B	5
11 – 12	18
13/14	18
15	5
16	0
17 – 18	17
19 – 22	0
23/24	0
25 – 27	0
28	17
28A/28B	17
29	5
30	11
31 – 32	17
32A/32B	17
33 – 36	18
36A – 36B	18
37 – 38	8
38A/38B	8
39	17
40	5
41	18
42 – 44	17
45 – 46	18
46A/46B	5
47 – 48	0
49 – 50	5
51 – 54	0
55	17
56 – 57	5
58	17

Export Classification C, ECCN EAR99

LOG OF PAGES (CONT)

Page No.	Rev No.
58A/58B	5
59	17
60 – 67	0
68	5
69 – 70	17
71	5
72	0
73/74	18
75 – 78	5
79 – 80	0
81	18
82	0
83	17
84	0
85	17
86 – 89	2
90	17
91/92	17
93 – 101	2
102	17
103 – 104	5
105 – 107	2
108	5
109 – 114	2
115	17
116 – 118	2

VOLUME 9

Cover	18
Title	18
PN	17
Chapter 71	
1	17
2 – 4	18
4A/4B	18
5 – 6	0
7 – 16	17
16A – 16B	17
17 – 18	0
19	17
20 – 22	18
23/24	18
24A/24B	17
25 – 28	0
29/30	0
30A – 30D	18
31 – 32	0
33	17
34 – 40	0
41 – 43	8
44	6
44A/44B	6
45 – 46	0
47	17
48 – 50	18
51/52	18
52A/52B	17
53 – 56	0
57/58	0
58A – 58D	18
59	0
60	17
61	0
62 – 67	17
68 – 69	18
70 – 84	17
85/86	17
87 – 90	17
91/92	17
93 – 96	18
Chapter 75	
1/2	0
3 – 6	0
Chapter 76	
1	7
2	2
3/4	7
5 – 8	2
9	7
10	2
11 – 12	7
13	2
14	6
15 – 16	7
16A/16B	7
17 – 19	2
20 – 21	18
22	2
23 – 24	18
25 – 28	2
29	7
30	7
31	7
32 – 34	2
35/36	2
37 – 42	2
43/44	2
45/46	2
47/48	2
49/50	2
51/52	2
53/54	2
55	18
56 – 67	2
58	18
59 – 60	2
61	18
62	2
63	18
64	2
65	18
66	2
67 – 68	18
69/70	2
71/72	2
73/74	2
75/76	7
77 – 84	18
Chapter 79	
1/2	17
3 – 4	17
5/6	0
7 – 8	0
9 – 10	17

VOLUME 10

Cover	18
Title	18
PN	17
Chapter 95	
1	11
2	18
2A/2B	18
3 – 5	0
6	7
7 – 16	0
17	18
18	17
19/20	7
21 – 22	0
23	11
24 – 28	0

LOG OF PAGES (CONT)

Page No.	Rev No.
29 – 30	11
30A/30B	11
31	18
32	17
32A/32B	17
33 – 35	0
36	18
36A – 36B	18
37	18
38	0
39/40	17
Chapter 96	
1 – 2	0
3	17
4 – 6	10
6A/6B	10
7 – 13	0
14	17
15 – 20	0
21/22	0
23 – 33	0
34 – 36	17
37 – 38	0
39	10
40	0
41 – 42	17
42A/42B	10
43	17
44 – 45	0
46	17
47 – 50	0
51/52	0
53 – 58	0
59	17
60 – 63	0
64	17
65 – 66	9
67	17
68	9
69 – 78	0
79/80	0
81/82	0
83 – 98	0
VOLUME 11	
Cover	18
Title	18
PN	18
Chapter 97	
1 – 8	0
9/10	0
11/12	0
13/14	0
15/16	0
17/18	0
19 – 32	0
33/34	0
35 – 46	0
47 – 49	18
50	0
51	18
52	0
53 – 55	18
56 – 64	0
VOLUME 12	
Cover	18
Title	18
PN	18
Chapter 98	
1	18
2 – 8	15
9/10	15
11 – 31	15
32	18
33 – 41	15
42 – 51	18
51A/51B	18
52 – 53	15
54 – 55	18
56 – 59	15
60	18
61 – 73	15
74	18
75 – 52	15
83/84	15
85/86	18
VOLUME 13	
Cover	18
Title	18
PN	18
Chapter 99	
1/2	0
MMS-01	
1/2	0
3 – 6	0
MMS-02	
1/2	0
3 – 12	0
MMS-03	
1/2	0
3 – 6	0
MMS-04	
1/2	0
3 – 6	0
MMS-05	
1/2	0
3 – 4	0
MMS-06	
1/2	0
3 – 13	0
14	18
15 – 22	0
23/24	0
MMS-07	
1/2	0
3 – 10	0
11/12	0
MMS-08	
1/2	0
3 – 18	0
19/20	0
MMS-09	
1/2	0
3 – 4	0
5/6	0
MMS-10	
1/2	0
3 – 24	0

Export Classification C, ECCN EAR99

HELP

EVALUATE

LOGISTICS

PUBLICATIONS

Have you found something wrong with this manual — an error, an inconsistency, unclear instructions, etc.? Although we strive for accuracy and clarity, we may make errors on occasion. If we do and you discover it, we would appreciate your telling us about it so that we can change whatever is incorrect or unclear. Please be as specific as possible.

Your complaint or suggestion will be acknowledged and we will tell you what we intend to do.

You may use the enclosed Customer Feedback form, as applicable, to inform us where we have erred.

Your assistance is sincerely appreciated.

CUSTOMER FEEDBACK

Return by fax to Product Support Engineering (450) 433-0272, e-mail to publications@bellflight.com, or mail to the address on the next page.

Manual Title: _____

Manual Number (if assigned): _____

Date of Issue: _____

Date of Last Revision: _____

Section, Chapter, Paragraph Affected: _____

Your Feedback: _____

_____

_____

_____

Now Reads: _____

_____

_____

_____

Should Read: _____

_____

_____

_____

_____

Your Name: _____

Address: _____

_____

Position: _____ Telephone No.: _____

Company: _____ Fax No.: _____

Reference No. (your initials and date): _____

(If you choose to mail this form, fold in thirds with address exposed, tape and mail.)

Export Classification C, ECCN EAR99

TAPE HERE

From _____

_____

_____

POSTAGE
NECESSARY

Product Support Engineering
12,800 rue de l'Avenir
Mirabel, Québec, Canada, J7J 1R4

FOLD ON DOTTED LINES AND TAPE

TAPE HERE

IMPORTANT

HELICOPTER SALES NOTICE

Please complete this form and return by mail, e-mail (publications@bellflight.com), or fax (817-280-6466, Attention: CPDC). This will ensure that the new owners/operators receive updates to their ***Bell Textron Technical Manuals*** and ***Bulletins.***

Model of Helicopter Sold or Purchased _____

Serial and Registration Number _____

Name of ***New Owner*** (company or individual) _____

Name of ***New Operator*** _____

Future Publications to be mailed to this address:

Address _____

City _____

State/Province _____

Zip/Postal Code _____

Country _____

Fax No. _____ Telephone No. _____

E-mail Address _____

Register for access to electronic publications at www.mybell.com

TAPE HERE

From _____

_____

_____

NO POSTAGE
NECESSARY
IF MAILED
IN THE
UNITED STATES

BUSINESS REPLY MAIL

FIRST CLASS PERMIT NO. 1744 FORT WORTH, TEXAS

BELL

COMMERCIAL PUBLICATION DISTRIBUTION CENTER
P.O. BOX 482
FORT WORTH, TEXAS 76101-0482

FOLD ON DOTTED LINES AND TAPE

TAPE HERE

SPARE PARTS WARRANTY

WARRANTY: Seller warrants each new helicopter part or helicopter part reconditioned by Seller to be free from defect in material and workmanship under normal use and service and if installed on Bell model helicopters for up to 1000 hours of operation, one (1) year from date of installation, or two (2) years from date of shipment by Seller, whichever occurs first. Seller assigns each manufacturer's warranty to Buyer to the extent such manufacturer's warranty exists and is assignable.

Parts, components and assemblies of all helicopter parts may have been restored or reworked due to mars, blemishes, dents or other irregularities during the manufacturing process. Such restoration and/or rework are permitted under Seller's approved manufacturing and engineering processes and guidelines. The restoration and/or rework so completed do not render such items defective in material or workmanship.

Seller's sole obligation under this warranty is limited to the repair or replacement of parts which are determined to Seller's reasonable satisfaction to have been defective within the applicable warranty period as described above. Replacement of parts may be either new or reconditioned at Seller's election and at the lowest allowable maintenance level contained in Seller's manuals, service bulletins or applicable supplier manuals. Seller shall also reimburse reasonable freight charges, excluding insurance, customs fees, duties, handling fees, and taxes. Seller shall not reimburse Buyer for any parts repaired or replaced outside of the Seller's Warranty Claims Process unless express prior written authorization is granted by Seller's Warranty Department to Buyer for such repair or replacement.

NO FAULT FOUND: In the event Seller determines, after evaluation of a returned part, that a defect does not exist, then Buyer shall pay all expenses incurred by Seller related to the return including, but not limited to, costs incurred in shipping and evaluating the part and cost for any replacement part and restocking of the part. In addition, Seller shall not reimburse Buyer for any costs related to the removal or reinstallation of such a part.

WARRANTY CLAIM PROCESS: Defective parts must be reported in writing to the Seller's Warranty Administration within fourteen (14) days of being found defective. Parts may be repaired or replaced with new or reconditioned parts, at Seller's election. Warranty adjustment is contingent upon the Buyer complying with the Seller's Warranty Process as described in the Bell Helicopter VISTA Customer Portal and with the Seller's Warranty Administration disposition instructions for defective parts. Failure to properly comply with Seller's Warranty Process may, at Seller's sole option, void Seller's warranty as to the allegedly defective part.

RETURN SHIPMENT: Parts returned to Seller will be eligible for remedy under this warranty only if the part is carefully packed by the Buyer for the return shipment. Damage occurring to a part due to improper packaging may result in the denial of a warranty claim. In the event that Seller determines a returned part to be damaged or unsalvageable due to improper packaging, the Buyer will be billed repair or replacement cost incurred by Seller. The party initiating shipment bears the risk of loss or damage to parts in transit.

CORE RETURNS: Any core removed by Buyer for which Seller has furnished a replacement part through the Warranty Process shall be shipped by Buyer, with all historical service records, to a facility designated by Seller, within fourteen (14) days of receipt by Buyer of the replacement part. Buyer shall provide Seller with proof of shipment within fourteen (14) days following receipt of the replacement part. In the event that Buyer fails to provide Seller with such proof of shipment within the fourteen (14) days or fails to provide the applicable historical service records, Buyer shall be charged the invoiced value of the replacement part.

WARRANTY AND LIABILITY DISCLAIMERS AND EXCLUSIONS: THIS WARRANTY IS GIVEN AND ACCEPTED IN PLACE OF (i) ALL OTHER WARRANTIES OR CONDITIONS, EXPRESS OR IMPLIED, INCLUDING BUT NOT LIMITED TO THE IMPLIED WARRANTIES OR CONDITIONS OF MERCHANTABILITY OR FITNESS FOR A PARTICULAR PURPOSE AND (ii) ANY OBLIGATION, LIABILITY, RIGHT, CLAIM OR REMEDY IN CONTRACT OR IN TORT, INCLUDING PRODUCT LIABILITIES BASED UPON STRICT LIABILITY, NEGLIGENCE, OR IMPLIED WARRANTY IN LAW.

This warranty is the only warranty made by Seller. The Buyer's sole remedy for a breach of this warranty or any defect in a part is the repair or replacement of the helicopter part and reimbursement of reasonable freight charges. Seller excludes liability, whether as a result of a breach of contract or warranty, negligence or strict product liability, for incidental or consequential damages, including without limitation, damage to the helicopter or other property, costs and expenses resulting from required changes or modifications to helicopter components and assemblies, changes in retirement lives and overhaul periods, local customs fees and taxes, and costs or expenses for commercial losses or lost profits due to loss of use or grounding of helicopters or otherwise.

Seller makes no warranty and disclaims all liability in contract or in tort, including, without limitation, negligence and strict tort liability, with respect to work performed by third parties at Buyer's request and with respect to engines, engine accessories, batteries, radios, and avionics.

Seller makes no warranty and disclaims all liability with respect to components or parts damaged by, or worn due to, normal wear and tear, erosion or corrosion. Seller makes no warranty and disclaims all liability for consumables which are defined as items required for normal and routine maintenance or replaced at scheduled intervals shorter than the warranty period. "Consumables" include but are not limited to engine and hydraulic oil, oil filters, packings and o-rings, anti-corrosion and/or sealing compounds, brush plating material, nuts, bolts, washers, screws, fluids, compounds, and standard aircraft hardware that is readily available to aircraft operators from sources other than Seller.

This warranty shall not apply to any helicopter part which has been repaired or altered outside Seller's factory in any way so as, in Seller's sole judgment, to affect its stability, safety or reliability. This warranty shall not apply to any helicopter part which has been subject to misuse, negligence or accident, or which has been installed in any aircraft which has been destroyed. Repairs and alterations which use or incorporate parts and components other than genuine Bell parts or parts approved by Bell for direct acquisition from sources other than Bell itself are not warranted by Bell, and this warranty shall be void to the extent that such repairs and alterations,

in Seller's sole judgment, affect the stability, safety or reliability of the helicopter or any part thereof, or damage genuine Bell or Bell-approved parts. No person, corporation or organization, including Bell Authorized Customer Service Facilities, is authorized by Seller to assume for it any other liability in connection with the sale of its helicopters and parts.

NO STATEMENT, WHETHER WRITTEN OR ORAL, MADE BY ANY PERSON, CORPORATION OR ORGANIZATION, INCLUDING BELL AUTHORIZED CUSTOMER SERVICE FACILITIES, MAY BE TAKEN AS A WARRANTY NOR WILL IT BIND SELLER.

CHOICE OF LAW AND JURISDICTION: This warranty shall be interpreted under and governed by the laws of the State of Texas. All legal actions based upon claims or disputes pertaining to or involving this warranty including, but not limited to, Seller's denial of any claim or portion thereof under this warranty, must be filed in the courts of general jurisdiction of Tarrant County, Texas or in the United States District Court for the Northern District of Texas, Ft. Worth Division located in Ft. Worth, Tarrant County, Texas. In the event that Buyer files such an action in either of the court systems identified above, and a final judgment in Seller's favor is rendered by such court, then Buyer shall indemnify Seller for all costs, expenses and attorneys' fees incurred by Seller in defense of such claims. In the event Buyer files such a legal action in a court other than those specified, and Seller successfully obtains dismissal of that action or transfer thereof to the above described court systems, then Buyer shall indemnify Seller for all costs, expenses and attorneys' fees incurred by Seller in obtaining such dismissal or transfer.

BULLETIN RECORD

This Bulletin Record provides a current listing of applicable bulletins that have been incorporated in this manual. Subsequent applicable bulletins will be incorporated in future revisions/reissues.

ALERT SERVICE BULLETINS

	ASB NUMBER	SUBJECT	DATE
△1	206-19-136	Tail Rotor Driveshaft Disc Pack Coupling Nuts, Replacement ff	27 August 2019

△1 This Alert Service Bulletin and all applicable bulletins issued prior to, have been incorporated.

TECHNICAL BULLETINS △1

	TB NUMBER	SUBJECT	DATE
△2	206-12-202	Fuel Transfer Pump and Centrifual Boost Pump Canister, Upgrade	31 October 2012

△1 Technical Bulletins issued prior to 1990 are currently being reviewed for incorporation and the BR page will be updated to reflect this information at a future revision.

△2 The following Technical Bulletins have not been incorporated: 206-13-204, 206-12-203, 206-11-98, 206-07-192, 206-04-181, 206-99-170A, 206-95-158, and 206-95-152.

TEMPORARY REVISION RECORD

This Temporary Revision Record provides a current listing of active Temporary Revisions against the manual. Temporary Revisions, which have been canceled/incorporated, will only be maintained on the record until the next revision is issued. If there are no Temporary Revisions shown on the record, this is confirmation that there are no Temporary Revisions issued against the manual.

TEMP. REV. NO.	TITLE	DATE ISSUED	DATE CANCELED

NOTE: For tracking purposes, Temporary Revisions are now being numbered (Example: TR-1).

LIST OF CHAPTERS

TITLE	CHAPTER
General Information	1
Airworthiness Limitations Schedule	4
Inspections and Component Overhaul Schedule	5
Dimensions and Charts	6
Lifting and Jacking	7
Weight and Balance	8
Towing	9
Parking and Mooring	10
Placards and Markings	11
Servicing	12
Rotor Analysis Diagnostic System	18
Air Distribution (Ventilation)	21
Equipment and Furnishings	25
Fire Protection	26
Fuel System	28
Hydraulic System	29
Ice and Rain Protection	30
Landing Gear	32
Doors and Windows	52
Fuselage	53
Main Rotor	62
Main Rotor Drive System	63
Tail Rotor	64
Tail Rotor Drive System	65
Flight Controls	67
Power Plant	71
Air System	75
Engine Controls	76
Engine Oil System	79
Instrument System	95
Electrical System	96

Avionics 97
Wiring Diagrams 98
Kits 99

CHAPTER 1 — GENERAL INFORMATION

TABLE OF CONTENTS

Paragraph Number	Title	Chapter/Section Number	Page Number
	GENERAL INFORMATION		
1-1	Scope of This Manual	1-00-00	3
1-2	Use of this Manual	1-00-00	3
1-3	Customer Feedback	1-00-00	3
1-4	Content and Arrangement	1-00-00	3
1-5	Revision Status and List of Effective Pages	1-00-00	3
1-6	Volumes and Chapters	1-00-00	3
1-7	Table of Contents	1-00-00	4
1-8	Paragraph, Page, Figure, and Table Numbering	1-00-00	4
1-9	Bulletins	1-00-00	4
1-10	Temporary Revisions	1-00-00	5
1-11	Consumable Materials	1-00-00	5
1-12	Special Tools	1-00-00	5
1-13	Torques	1-00-00	5
1-14	Warnings, Cautions, and Notes	1-00-00	5
1-15	Standard Practices	1-00-00	6
1-16	Wear, Damage, and Repair Limits	1-00-00	6
1-17	Replacement Parts and Assemblies	1-00-00	6
1-18	Model Designation Symbols	1-00-00	6
1-19	Helicopter Description	1-00-00	6

FIGURES

Figure Number	Title	Page Number
1-1	Major Installations and Assemblies	8
1-2	B3 Helicopters, S/N 3567 and Subsequent, Feature Differences	9

GENERAL INFORMATION

1-1. SCOPE OF THIS MANUAL

This Maintenance Manual (MM) provides the data that is needed to do the maintenance and repair of Model 206A, 206B, and 206B3 helicopters. This manual should be used in conjunction with the BHT-206A/B-M&O for Models 206A and 206B, the BHT-206B3-CR&O for Model 206B3, and the BHT-206A/B/L-Series-CR&O.

NOTE

When the BHT-206A/B-SERIES-CR&O is called out as a reference within this manual, use the BHT-206A/B-M&O or BHT-206B3-CR&O, as applicable.

The BHT-206B3-CR&O may also be used for applicable components used on Model 206A and 206B helicopters, except when superseded by the BHT-206A/B/L-Series-CR&O.

This MM is backed by other Bell Helicopter publications. These other publications are also used on other helicopter models. These other publications are the BHT-SPECTOOL-IPB, the BHT-ALL-SPM, the BHT-ELEC-SPM, and the CSSD-PSE-87-001.

1-2. USE OF THIS MANUAL

The instructions that are provided in this manual and those that have been changed by Alert Service Bulletins, issued by Bell Helicopter Textron Inc., and by Airworthiness Directives, issued by the local Aviation Authority, shall be strictly followed.

Before you do any repairs that are not specified in this manual or related publications, contact Product Support Engineering.

The standard repair procedures are not given in this manual. Refer to FAA Publication, AC 43.13-1A, Aircraft Inspection and Repair Manual for the standard repair procedures. The standard repairs must not be more than the component repair limits as published by Bell Helicopter Textron for the Model 206A, 206B, and 206B3. Do not do repairs if the weight and balance, structural integrity, interchangeability, or operational characteristics are changed in a negative manner. For more information, contact Product Support Engineering.

1-3. CUSTOMER FEEDBACK

Bell Helicopter Textron strives to give you, the customer, accurate and straightforward manuals. Sometimes, we may make mistakes. If you find any mistakes, we would appreciate it if you told us. Your observation, suggestion, or complaint will be acknowledged.

For your convenience, we include a Customer Feedback Form at the beginning of this manual. You can send it by fax or mail it to us. When you tell us about a mistake that is found in the Maintenance Manual, please be as specific as possible. Your help to make sure that the manual is correct is very much appreciated.

1-4. CONTENT AND ARRANGEMENT

The breakdown of the helicopter by systems in this manual is done under a modified Airline Transportation Association (ATA) chapter system. The manual is separated into 13 volumes and 34 chapters to make it easy to find data.

1-5. REVISION STATUS AND LIST OF EFFECTIVE PAGES

The revision status of the manual is provided in the Log of Revisions (page A) and in the title page of the manual. The Log of Pages provides the revision status of every page in the manual.

1-6. VOLUMES AND CHAPTERS

A volume groups the chapters into general categories to permit quick access to data.

- **VOLUME 1 — GENERAL INFORMATION**
- Chapter 1 — General Information
- Chapter 4 — Airworthiness Limitations Schedule
- Chapter 5 — Inspections and Component Overhaul Schedule
- **VOLUME 2 — HANDLING AND SERVICING**
- Chapter 6 — Dimensions and Charts

- Chapter 7 — Lifting and Jacking
- Chapter 8 — Weight and Balance
- Chapter 9 — Towing
- Chapter 10 — Parking and Mooring
- Chapter 11 — Placards and Markings
- Chapter 12 — Servicing
- Chapter 18 — Vibration and Noise
- **VOLUME 3 — EQUIPMENT**
- Chapter 21 — Air Distribution (Ventilation)
- Chapter 25 — Equipment and Furnishings
- Chapter 26 — Fire Protection
- **VOLUME 4 — FUEL/HYDRAULICS**
- Chapter 28 — Fuel System
- Chapter 29 — Hydraulic System
- **VOLUME 5 — AIRFRAME**
- Chapter 30 — Ice and Rain Protection
- Chapter 32 — Landing Gear
- Chapter 52 — Doors and Windows
- Chapter 53 — Fuselage
- **VOLUME 6 — MAIN ROTOR/MAIN ROTOR DRIVE SYSTEM**
- Chapter 62 — Main Rotor
- Chapter 63 — Main Rotor Drive System
- **VOLUME 7 — TAIL ROTOR/TAIL ROTOR DRIVE SYSTEM**
- Chapter 64 — Tail Rotor
- Chapter 65 — Tail Rotor Drive System
- **VOLUME 8 — FLIGHT CONTROLS**
- Chapter 67 — Flight Controls
- **VOLUME 9 — POWER PLANT**
- Chapter 71 — Power Plant
- Chapter 75 — Air System
- Chapter 76 — Engine Controls
- Chapter 79 — Engine Oil System
- **VOLUME 10 — INSTRUMENTS/ ELECTRICAL**
- Chapter 95 — Instrument System
- Chapter 96 — Electrical System
- **VOLUME 11 — AVIONICS**
- Chapter 97 — Avionics
- **VOLUME 12 — WIRING DIAGRAMS**
- Chapter 98 — Wiring Diagrams
- **VOLUME 13 — KITS**
- Chapter 99 — Auxiliary Equipment Kits

1-7. TABLE OF CONTENTS

To locate the required information, every chapter has a table of contents.

You may also consult the list of volumes (paragraph 1-6) and look for the volume and chapter in which the necessary data is most likely to be found.

1-8. PARAGRAPH, PAGE, FIGURE, AND TABLE NUMBERING

Paragraphs, pages, figures, and tables start at number 1 within a chapter.

1-9. BULLETINS

Technical Bulletins (TBs) and Alert Service Bulletins (ASBs) are published when they are necessary. These documents supplement the Maintenance Manual and provide instructions and data to change components, systems, and maintenance practices on the helicopter. When a bulletin affects the way the helicopter is

maintained, it is incorporated in the Maintenance Manual at the next available opportunity. Refer to the Bulletin Record (page BR) for the list of bulletins that have been incorporated in this manual.

1-10. TEMPORARY REVISIONS

Temporary revisions are published when necessary. Refer to the Temporary Revision Record (page TR) for a listing of active temporary revisions against this manual.

1-11. CONSUMABLE MATERIALS

WARNING

MAKE SURE ALL SAFETY PRECAUTIONS ARE FOLLOWED WHEN HANDLING AND USING CONSUMABLE MATERIALS. FAILURE TO DO SO CAN CAUSE INJURY OR DEATH.

CAUTION

HANDLING, STORAGE, AND SAFETY PRECAUTIONS FOR CONSUMABLE MATERIALS SHALL BE IN ACCORDANCE WITH MANUFACTURER'S INSTRUCTIONS, UNLESS OTHERWISE SPECIFIED IN THIS MANUAL.

Most of the maintenance procedures require the use of consumable materials. All of the necessary consumable materials are listed in a "Materials Required" table at the beginning of every applicable maintenance procedure. The consumable materials are also called out by nomenclature and c-code number in the text (e.g., drycleaning solvent (C-304)). The c-code number is a unique identification code for each material to be referenced in the Standard Practices Manual (BHT-ALL-SPM, Chapter 13).

On occasion, the materials that are used in maintenance tasks will change properties, change suppliers, or be discontinued. Also, new or improved materials may become available. If there is ever a difference between the Maintenance Manual and the Standard Practices Manual (BHT-ALL-SPM), the manual that has the latest date of issue or revision shows the preferred material. However, either material may be used for the maintenance task, unless otherwise specified in the procedure.

1-12. SPECIAL TOOLS

Some maintenance procedures require the use of Bell Helicopter Textron (BHT) special tools, commercial tools, or workaids. All of the necessary tools are listed in a "Special Tools" table at the beginning of every applicable maintenance procedure.

A description and illustration of the BHT special tools are found in the Special Tools Illustrated Parts Breakdown manual (BHT-SPECTOOL-IPB). Supplier information for the commercial tools is provided when tools are too specific and may be difficult to find. Other commercial tool brands with equivalent or similar tools may be used to accomplish the tasks. Dimensions and materials necessary to make the workaids are shown in the applicable figures.

1-13. TORQUES

When a torque value is not shown, the standard torque value for that combination of fasteners shall be used. Standard torque values for various combinations of fasteners are found in the Standard Practices Manual (BHT-ALL-SPM).

1-14. WARNINGS, CAUTIONS, AND NOTES

WARNING

A MAINTENANCE PROCEDURE, PRACTICE, ETC. THAT, IF NOT STRICTLY OBSERVED, COULD RESULT IN PERSONAL INJURY OR DEATH.

CAUTION

A MAINTENANCE PROCEDURE, PRACTICE, ETC. THAT, IF NOT STRICTLY OBSERVED, COULD RESULT IN DAMAGE TO EQUIPMENT OR TO THE HELICOPTER.

NOTE

A note provides supplemental data about the procedure, practice, condition, etc. for the required maintenance task.

Warnings, cautions, and notes are used throughout the manual to emphasize important and critical instructions. They normally appear ahead of the procedure they apply to. Notes used in tables and figures are numbered in sequence, starting at 1. When the number is highlighted with a symbol (e.g., △), the note applies to specific data contained in the table or figure. When the number is not highlighted, the note applies to all of the content.

1-15. STANDARD PRACTICES

Standard maintenance practices and procedures that are not given in this manual are found in the Standard Practices Manual (BHT-ALL-SPM) and the Electrical Standard Practices Manual (BHT-ELEC-SPM).

1-16. WEAR, DAMAGE, AND REPAIR LIMITS

CAUTION

THE METRIC EQUIVALENTS TO U.S. STANDARD WEIGHTS AND MEASURES ARE PROVIDED IN THIS MANUAL. HOWEVER, USE ONLY THE U.S. STANDARD VALUES WHEN YOU TAKE A MEASUREMENT TO ESTABLISH A SPECIFIC DIMENSION OR TO DETERMINE THE SERVICEABILITY OF A COMPONENT.

Throughout the Maintenance Manual (MM), wear, damage, and repair limits, including fits and tolerances, are provided in the inspection and repair procedures to determine if the parts are serviceable. It is not intended that all dimensions provided be examined as a prescribed maintenance procedure. However, you must examine the dimensions of parts that show signs of wear or physical damage.

Non-Destructive Inspection (NDI) of a part or component of an assembly is required only when the MM or another Bell Helicopter Textron (BHT) approved document specifically instructs the maintainer to do so (e.g., when written steps of an inspection or other procedure call for NDI procedures to be carried out on specific parts). However, NDI is to be accomplished when indications resulting from a visual inspection convey that a crack or other defect may exist and that further inspection is required using NDI procedures (BHT-ALL-SPM, Chapter 6) to ensure the airworthiness of the part or component.

As applicable, the BHT-ALL-SPM, BHT-ALL-SRM, and BHT-ELEC-SPM contain all of the common information and procedures required during the inspection and repair of parts.

1-17. REPLACEMENT PARTS AND ASSEMBLIES

Replacement parts and assemblies that are necessary for the correct and proper maintenance of the helicopter and its components are provided in the BHT-206A/B-SERIES-IPB.

1-18. MODEL DESIGNATION SYMBOLS

Inverse symbols ■ with model designation are used throughout the manual in text and illustrations to show procedures, components, etc., that are peculiar to the model indicated on the symbol. Helicopter model designations and effectivities are as follows:

A 206A JetRanger S/N 4 through 600 and S/N 672 through 715

B 206B JetRanger II S/N 661 through 671 and S/N 716 through 2211

B3 206B3 JetRanger III S/N 2212 and subsequent

1-19. HELICOPTER DESCRIPTION

Major installations and assemblies are shown in Figure 1-1.

The fuselage assembly consists of the forward fuselage and tailboom. The forward fuselage encloses the cabin and fuel cells, and provides pylon and engine supports.

The basic structure of the forward fuselage consists of a lower-curved honeycombed sandwich panel and an upper longitudinal aluminum beam. The core of the sandwich structure is aluminum alloy throughout, and is faced with aluminum alloy except in the fuel cell region, where fiberglass is used. The rotor,

transmission, and engine are supported by the upper longitudinal beam, which is connected to the lower structure by three fuselage bulkheads and a center post to form an integrated structure. The most forward and aft bulkheads act as carry-through structures for the landing gear crosstubes. The tailboom is a full monocoque structure with aluminum skin and aluminum substructure.

A 206A helicopters are powered by a Rolls-Royce 250-C18, turboshaft, internal combustion engine, consisting of six stage axial and single stage centrifugal flow compressor, a single stage combustion chamber, two stage gas producer turbine, and two stage power turbine.

B 206B S/N 2212 through 3566 helicopters are powered by a Rolls-Royce model 250-C20, turboshaft, internal combustion engine, consisting of six stage axial and single stage centrifugal flow compressor, a single stage combustion chamber, two stage gas producer turbine, and two stage power turbine.

B3 206B3 S/N 2212 through 3566 helicopters are powered by a Rolls-Royce model 250-C20B, turboshaft, internal combustion engine, consisting of six stage axial and single stage centrifugal flow compressor, a single stage combustion chamber, two stage gas producer turbine, and two stage power turbine.

B3 206B3 S/N 3567 and subsequent helicopters are powered by a Rolls-Royce model 250-C20J, turboshaft, internal combustion engine, consisting of six stage axial and single stage centrifugal flow compressor, a single stage combustion chamber, two stage gas producer turbine, and two stage power turbine.

Refer to Rolls-Royce Operation and Maintenance Manuals, 5W2 (250-C18 engine), and 10W2 (250-C20 series engines) for detailed description of engines, engine components, and engine specifications.

A **B** **B3** Helicopters S/N 4 through 3566 have usable fuel capacity of 76 U.S. gallons (287.7 L).

B3 Helicopters S/N 3567 and subsequent have a usable fuel capacity of 91 U.S. gallons (344.4 L).

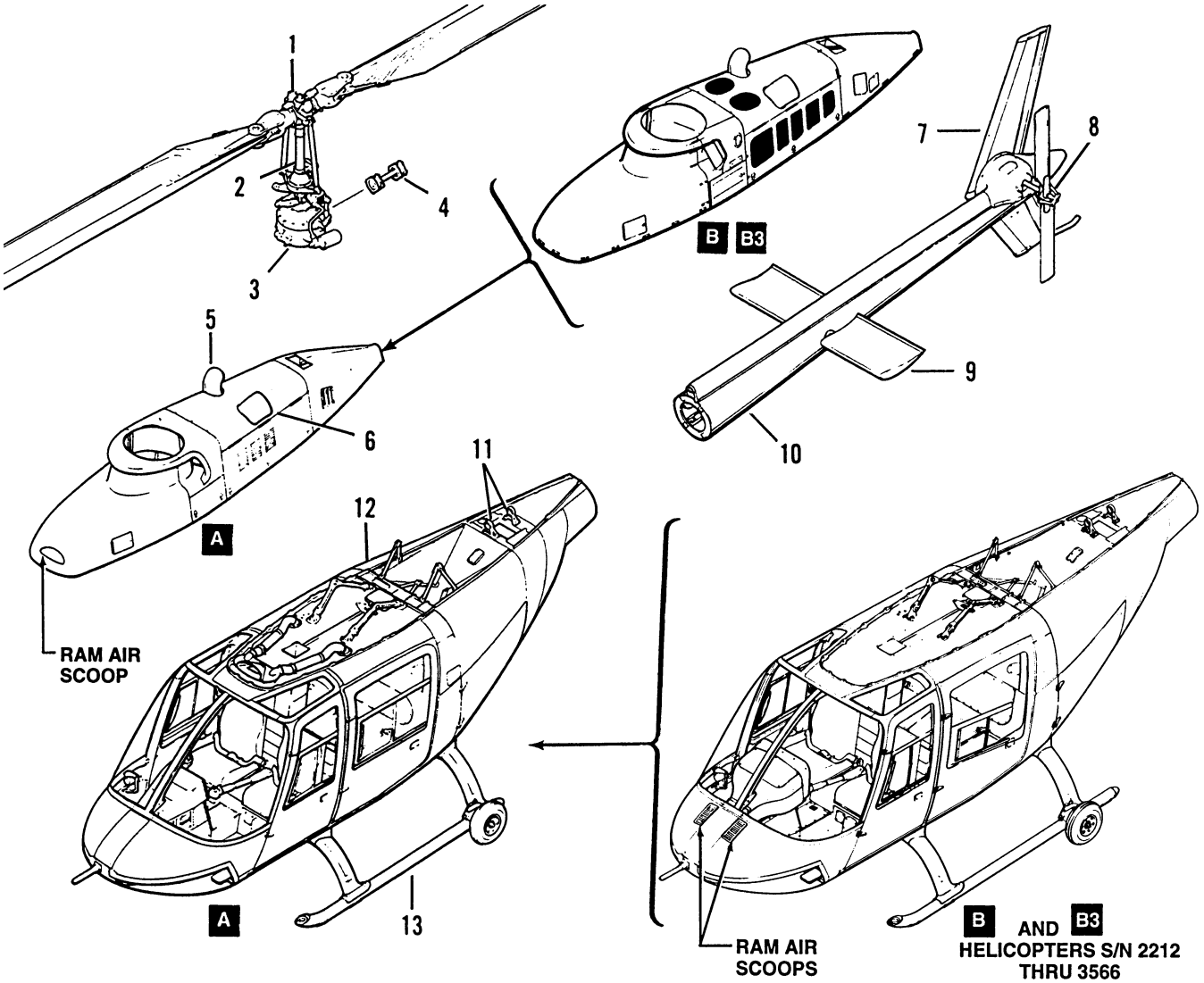

INDEX NUMBER	TITLE	VOLUME	CHAPTER
1	Main Rotor Hub and Blade Installation	6	62
2	Pylon Installation	8	67
3	Transmission Assembly	6	63
4	Main Driveshaft Assembly	6	63
5	Engine Installation	9	71
6	Cowling Installation	9	71
7	Vertical Fin Installation	5	53
8	Tail Rotor Hub and Blade Installation	6	64
9	Horizontal Stabilizer Installation	5	53
10	Tailboom Assembly	5	53
11	Tail Rotor Driveshaft Installation	7	65
12	Fuselage Structure Assembly	5	53
13	Landing Gear Assembly	5	32

206A/BS-M-1-1

Figure 1-1. Major Installations and Assemblies

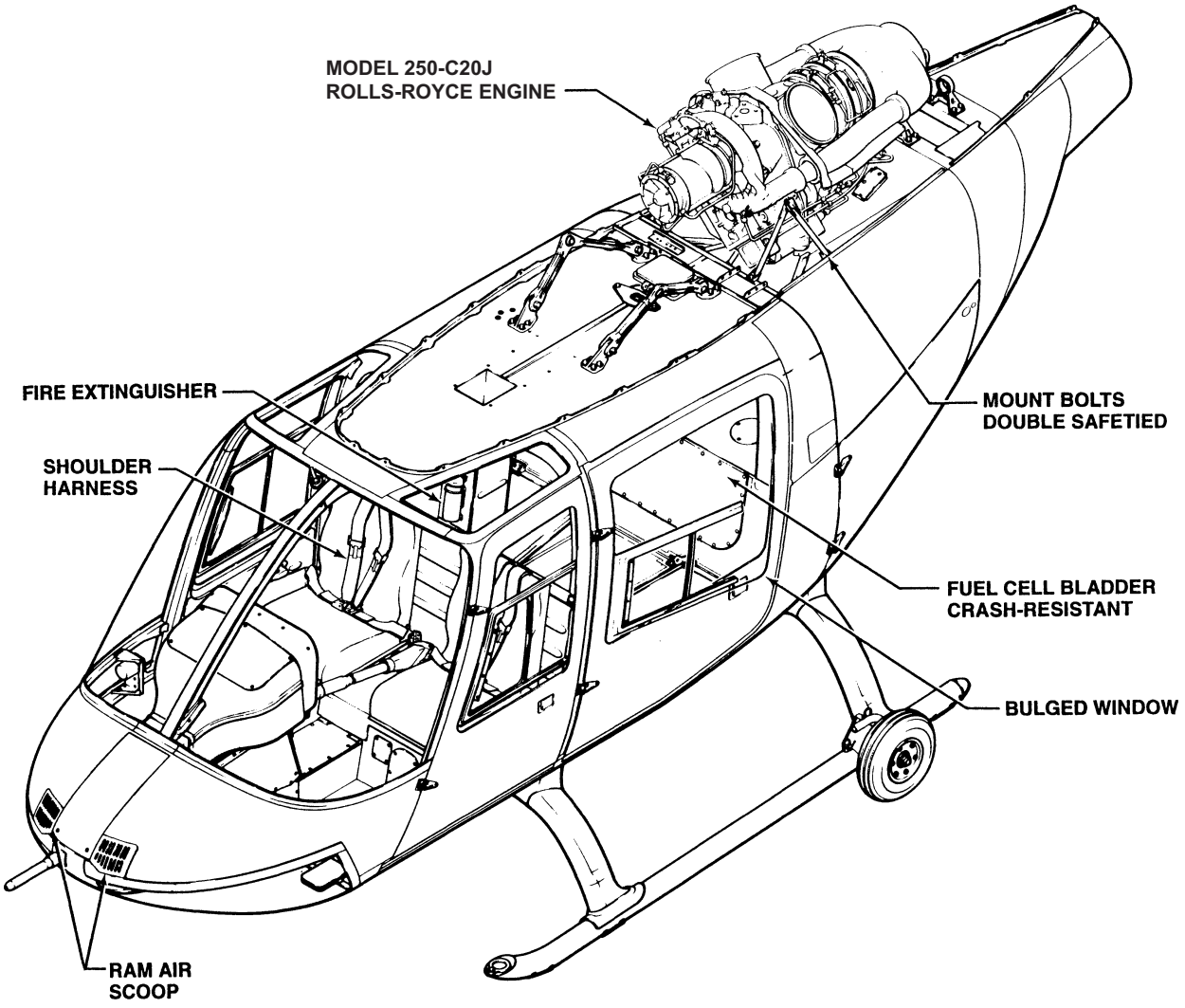

206AB_MM_01_0002

Figure 1-2. B3 Helicopters, S/N 3567 and Subsequent, Feature Differences

CHAPTER 4 — AIRWORTHINESS LIMITATIONS SCHEDULE

TABLE OF CONTENTS

Paragraph Number	Title	Chapter/Section Number	Page Number
	AIRWORTHINESS LIMITATIONS SCHEDULE		
4-1	Airworthiness Limitations Schedule	4-00-00	3

TABLES

Table Number	Title	Page Number
4-1	Airworthiness Limitations Schedule	4

The Airworthiness Limitations Schedule is approved by the Minister and specifies the maintenance required by any applicable airworthiness or operational rules unless an alternative program has been approved by the Minister.

07 Jan '98

Chief Engineering
Aircraft Certification
Transport Canada

REVISION NO.	DATE OF SIGNATURE	TC SIGNATURE
Original	7 January 1998	N/A
1	21 May 2002	21 May 2002.
2	N/A	N/A
3	N/A	N/A
4	N/A	N/A
5	N/A	N/A
6	7 December 2009	07 Dec 09
7	N/A	N/A
8	N/A	N/A
9	N/A	N/A
10	8 April 2011	8/APR./2011
11	13 October 2011	13 OCT. 2011
12	1 June 2012	1 JUNE 2012
13	7 November 2012	7 NOV. 2012

REVISION NO.	DATE OF SIGNATURE	TC SIGNATURE
14	N/A	N/A
15	N/A	N/A
16	25 JUNE 2019	RAD Acting AARDD ROOP DHALIWAL 25 June 2019

AIRWORTHINESS LIMITATIONS SCHEDULE

4-1. AIRWORTHINESS LIMITATIONS SCHEDULE

WARNING

ALL REPAIR AND OVERHAUL PROCEDURES LIVES PUBLISHED BY BELL HELICOPTER TEXTRON, INCLUDING COMPONENT RETIREMENT LIFE, ARE BASED SOLELY ON THE USE OF BELL APPROVED PARTS AND PROCESSES. IF PARTS OR PROCESSES DEVELOPED OR APPROVED BY PARTIES OTHER THAN BELL HELICOPTER ARE USED, THEN THE DATA PUBLISHED OR OTHERWISE SUPPLIED BY BELL HELICOPTER ARE NOT APPLICABLE. THE USER IS WARNED TO NOT RELY ON BELL HELICOPTER DATA FOR PARTS AND PROCESSES NOT APPROVED BY BELL HELICOPTER. ALL APPLICABLE INSPECTIONS AND REPAIR METHODS MUST BE OBTAINED FROM THE SUPPLIER OF THE PARTS OR PROCESSES NOT APPROVED BY BELL HELICOPTER. BELL HELICOPTER IS NOT RESPONSIBLE FOR PARTS OR PROCESSES OTHER THAN THOSE WHICH IT HAS ITSELF DEVELOPED OR APPROVED.

WARNING

CONTINUED USE OF ANY TIME/CALENDAR/RIN LIFE LIMITED COMPONENT PAST ITS STATED LIMITS IS NOT PERMITTED AS IT COULD SERIOUSLY AFFECT THE AIRWORTHINESS OF THE HELICOPTER.

THE COMPONENT MUST BE REMOVED FROM THE HELICOPTER NOT LATER THAN THE END OF THE LIFE LIMIT. IT MUST EITHER BE MADE UNSERVICEABLE OR MARKED IN A CONSPICUOUS MANNER TO PREVENT CONTINUED USE, EVEN INADVERTENT USE.

WHEN A REPLACEMENT PART IS INSTALLED, THE PART NAME, PART NUMBER, SERIAL NUMBER, AND CURRENT OPERATING HOURS, IF APPLICABLE, MUST BE RECORDED IN THE HISTORICAL SERVICE RECORD FOR THE ASSEMBLY OR HELICOPTER.

NOTE

The requirements stated in Chapter 5 are to be complied with and the appropriate maintenance actions are to be performed.

NOTE

The airworthiness life or inspection interval for any part number contained in this schedule applies to all the successive dash numbers for that component unless it is otherwise specified.

The mandatory airworthiness limitations schedule (Table 4-1) summarizes the mandatory maximum life, in hours, years (months) or by Retirement Index Number (RIN) of components with a limited airworthiness life. Parts that are not on the schedule have an unlimited airworthiness life.

Refer to the engine manufacturer's publications for the airworthiness limitations schedule of the engine and components.

WARNING

SOME PARTS ARE INSTALLED AS ORIGINAL EQUIPMENT ON BOTH MILITARY AND COMMERCIAL HELICOPTERS AND MAY HAVE A LOWER AIRWORTHINESS LIFE AND/OR OVERHAUL SCHEDULE WHEN USED ON A MILITARY HELICOPTER. IN ADDITION, CIRCUMSTANCES

SURROUNDING THEIR USE MAY CALL FOR OPERATION OF THE MILITARY HELICOPTER OUTSIDE OF THE APPROVED COMMERCIAL FLIGHT ENVELOPE. CONSEQUENTLY, PARTS THAT HAVE BEEN USED ON MILITARY HELICOPTERS SHOULD NOT BE USED ON COMMERCIAL HELICOPTERS.

CAUTION

AIRWORTHINESS LIFE OF SOME KIT COMPONENTS MAY NOT BE COVERED IN THIS SCHEDULE. REFER TO APPLICABLE SERVICE INSTRUCTION (SI) OR MAINTENANCE MANUAL SUPPLEMENT (MMS) FOR KIT COMPONENTS' SCHEDULE.

NOTE

The airworthiness life given or the failure to give an airworthiness life to a component does not constitute a warranty of any kind. The only warranty applicable to the helicopter or any component is the warranty included in the Purchase Agreement for the helicopter or the component.

The airworthiness lives given to the components and assemblies are determined by experience, tests and the judgment of Bell Helicopter engineers. The airworthiness lives and inspection intervals cannot be changed without the approval of the Minister of Transport Canada.

Prior to disposing of unsalvageable helicopter parts and materials, caution should be exercised to ensure that the parts and materials are disposed of in a manner that does not allow them to be returned for service. Refer to FAA Advisory Circular 21-38 for guidance on the disposal of unsalvageable helicopter parts and materials.

Table 4-1. Airworthiness Limitations Schedule

COMPONENT	PART NUMBER (1)	AIRWORTHINESS LIFE
	MAIN ROTOR HUB AND BLADES	
Main Rotor Yoke	206-010-101-001/-009/-013/ -019/-021	(2) 10 years
Main Rotor Grip	206-010-102-009/-013/-117/-121	4800 hours
Main Rotor Trunnion	206-010-104-003	(3) 2400 hours
Tension Torsion Strap	206-010-105-003/-005	(6)
Strap Retention Pin	206-010-123-001	(19) 100 hours
Strap Retention Pin	206-010-123-003	(20) 1200 hours
Strap Retention Fitting	206-010-155-007	(19) 100 hours

Table 4-1. Airworthiness Limitations Schedule (Cont)

COMPONENT	PART NUMBER 1	AIRWORTHINESS LIFE
MAIN ROTOR HUB AND BLADES (CONT)		
Strap Retention Fitting	206-010-155-011/-015	4 1200 hours
Latch Bolt	206-010-169-001/-003	43
Main Rotor Blade	206-010-200-029	8
Main Rotor Blade	206-010-200-033/-133/-137/ -139/-141/-145/-149/-151/-153	27 5000 hours
Main Rotor Trunnion	206-011-113-001	3 2400 hours
Main Rotor Trunnion	206-011-113-103/-105	16 4800 hours
Latch Bolt	206-011-122-003	43
Strap Retention Fitting	206-011-124-001	2400 hours
Strap Retention Pin	206-011-125-001	1200 hours
Strap Retention Pin	206-011-125-105	2500 hours
Main Rotor Grip	206-011-132-009/-113	5 4800 hours
Strap Retention Fitting	206-011-140-001	1200 hours
Tension Torsion Strap	206-011-147-001/-003/-005/-007	7 26 1200 hours/24 months
Strap Retention Fitting	206-011-150-101/-105	2400 hours
Tension Torsion Strap	206-011-154-101/-103/-105/-107	7 26 1200 hours/24 months
Latch Bolt	206-011-260-101	17 22 1200 hours
Latch Bolt	206-011-260-103	17 2500 hours
Tension Torsion Strap	206-310-004-101/-103	46 1200 hours/48 months
SWASHPLATE AND SUPPORT		
Upper Collective Tube	206-001-024-017/-027	42 4800 hours
Lower Collective Tube	206-001-194-001	4800 hours
Lower Cyclic Tube	206-001-194-005	Unlimited
Lower Cyclic Tube	206-001-194-101	23 15,000 hours
Bellcrank Support	206-001-521-005/-006	32
Bellcrank Support	206-001-521-013/-014	39

Table 4-1. Airworthiness Limitations Schedule (Cont)

COMPONENT	PART NUMBER 1	AIRWORTHINESS LIFE
SWASHPLATE AND SUPPORT (CONT)		
Lower Collective Tube	206-001-524-001/-011/-015	4800 hours
Servo Actuator Support	206-001-566-001/-101	10,000 hours
Servo Actuator Support	206-001-566-105	23 5000 hours
Collective Idler Link	206-010-407-001	4800 hours
Collective Idler Link	206-010-446-107	14,400 hours
Swashplate Duplex Bearing	206-010-420-001/-003	1200 hours
Swashplate Support Assembly	206-010-452-001/-005/-109	9 4800 hours
Swashplate Support Assembly	206-010-452-113	Unlimited
Swashplate Sleeve Assembly	206-010-454-001/-005	4800 hours
Swashplate Sleeve Assembly	206-010-454-109/-113	14,400 hours
Collective Lever	206-010-447-109	14,400 hours
Collective Lever	206-010-467-001/-105	4800 hours
Servo Actuator	206-076-023-001/-003	30 875 hours
Servo Actuator	206-076-024-ALL	30 875 hours
Servo Actuator	41103750/-2	30 875 hours
Servo Actuator	41103650-005	30 875 hours
POWER TRAIN		
Mast	206-010-332-001	33 1200 hours
Spider	206-040-041-001	31 500 hours
Tail Rotor Gearbox Duplex Bearing	206-040-410-003/-005/-101	14 3000 hours
Sun Gear	206-040-662-101	34
Oil Cooler Fan Impeller	206-061-432-011	24
Freewheel Clutch	CL41742/-1	3000 hours
Freewheel Clutch	CL42250-1	3000 hours
Freewheel Clutch	X136028	1200 hours
Oil Cooler Fan Impeller	SPL610-216	1200 hours

Table 4-1. Airworthiness Limitations Schedule (Cont)

COMPONENT	PART NUMBER 1	AIRWORTHINESS LIFE
TAIL ROTOR HUB AND BLADES		
Tail Rotor Blade	206-010-750-003/-005/-007	10
Tail Rotor Trunnion	206-010-776-001	11 2400 hours
Tail Rotor Yoke	206-010-788-001	11 1200 hours
Tail Rotor Yoke	206-011-802-001	11 1200 hours
Tail Rotor Trunnion	206-011-803-001/-005	11 2400 hours
Tail Rotor Yoke	206-011-811-001/-005	12
Tail Rotor Yoke	206-011-811-009	18 4800 hours
Tail Rotor Yoke	206-011-811-123/-125	12 1800 hours
Tail Rotor Yoke	206-011-819-101/-105/-109	25 5000 hours
Tail Rotor Blade	206-016-201-001/-103/-107/ -113/-115	28 2400 hours
Tail Rotor Blade	206-016-201-125/-127/-131/ -133/-135/-137	28 29 2500 hours
Tail Rotor Blade	206-016-501-001	200 hours
MISCELLANEOUS		
Landing Gear Crosstube Assembly	206-050-107-ALL	21
Emergency Lightweight Flotation Landing Gear Crosstube Assembly	206-050-107-025/-027/-119/-121	37
Landing Gear Crosstube Assembly	206-050-119-ALL	21
Emergency Flotation Landing Gear Crosstube Assembly	206-050-134-001/-003/-005/ -007/-011/-105	36
Fixed Float Landing Gear Crosstube Assembly	206-050-157-001/-003	38
Fixed Float Landing Gear Crosstube Assembly	206-050-169-001/-003	35
Emergency Floats Cylinder	206-073-818-001	41 10 years
Emergency Floats Cylinder	206-073-839-103	40 15 years
Emergency Floats Cylinder	206-073-848-113/ -121 (1271226)	40 15 years

Table 4-1. Airworthiness Limitations Schedule (Cont)

COMPONENT	PART NUMBER (1)	AIRWORTHINESS LIFE
	MISCELLANEOUS (CONT)	
Emergency Floats Cylinder	206-073-919-001/-003/-005/-007	(41) 10 years
Emergency Floats Cylinder	206-073-922-101	(41) 10 years
Emergency Floats Cylinder	206-073-929-003/-101/-103	(41) 10 years
Emergency Floats Cylinder	206-073-930-101	(41) 10 years
Emergency Floats Cylinder	1269556-3/-4	(40) 15 years
Emergency Floats Cylinder	23711982	(40) 15 years
Emergency Floats Cylinder	274645	(40) 15 years
Squib, Emergency Floats	94455	(15) 15 years
Squib, Emergency Floats	29022968	(44) 15 years
Hoist Cable Cutter Assembly	Y-1265-11-1	(45)
	POWER PLANT	
Turboshaft Engine	250-C18 Series	Refer to Rolls-Royce 250-C18 Series Operation and Maintenance Manual, 5W2
Turboshaft Engine	250-C20 Series	Refer to Rolls-Royce 250-C20 Series Operation and Maintenance Manual, 10W2
	AIRFRAME	
Pylon Support Link	206-031-508-005/-007	(13)

NOTES:

(1) Airworthiness limitation for part number listed applies to all successive dash numbers for that component unless otherwise specified.

(2) Main rotor yokes 206-010-101-125/-129 are not listed and are conditional. All yokes listed have a 10-year airworthiness life. Yokes in use as of 17 July 1979, with less than 5 years in service, shall be removed after 10 years. Yokes in use as of 17 July 1979, with more than 5 years in service, will have been removed by 1 January 1984. Refer to ASB 206-79-4, dated 17 July 1979.

(3) Main rotor trunnions 206-010-104 and 206-011-113-001 with more than 2400 hours in service, or time in use unknown, will have been removed from service by 1 September 1981. Refer to ASB 206-80-7 Rev. B, dated 15 October 1980.

Table 4-1. Airworthiness Limitations Schedule (Cont)

NOTES (CONT):

4 Strap retention fittings 206-010-155-011/-015 will have been removed from service no later than 1 January 1979. Refer to ASB 206-76-7, dated 13 August 1976 and note 6.

5 Main rotor grip 206-011-132-009, with serial numbers listed below, have a 1200-hour airworthiness life. The serial numbers not listed below have a 4800-hour airworthiness life. These parts are originally delivered on Bell 206L1, but could have found their way to the 206A/B series. Refer to ASB 206L-80-15, dated 29 July 1980.

A1-00001	A1-00029	A1-00050	A1-00077	A1-00099	A1-00132
A1-00004	A1-00031	A1-00053	A1-00078	A1-00100	A1-00133
A1-00005	A1-00032	A1-00054	A1-00080	A1-00101	A1-00134
A1-00006	A1-00033	A1-00055	A1-00083	A1-00103	A1-00135
A1-00007	A1-00034	A1-00056	A1-00084	A1-00104	A1-00136
A1-00009	A1-00035	A1-00057	A1-00085	A1-00105	A1-00192
A1-00010	A1-00036	A1-00059	A1-00086	A1-00106	A1-00222
A1-00014	A1-00038	A1-00061	A1-00087	A1-00111	A1-00248
A1-00016	A1-00039	A1-00062	A1-00088	A1-00113	A1-00287
A1-00017	A1-00040	A1-00064	A1-00089	A1-00115	A1-00300
A1-00019	A1-00042	A1-00066	A1-00090	A1-00116	A1-00305
A1-00021	A1-00043	A1-00067	A1-00091	A1-00118	A1-00308
A1-00022	A1-00044	A1-00068	A1-00092	A1-00119	
A1-00023	A1-00046	A1-00071	A1-00093	A1-00120	
A1-00024	A1-00047	A1-00073	A1-00095	A1-00124	
A1-00027	A1-00048	A1-00074	A1-00096	A1-00130	
A1-00028	A1-00049	A1-00075	A1-00098	A1-00131	

6 Tension torsion straps 206-010-105-003/-005 will have been removed from service no later than 1 January 1979. Refer to ASB 206-78-1, dated 14 April 1978 and FAA AD 78-11-02 R1, dated 15 December 1988.

7 Tension torsion straps 206-011-147 and 206-011-154 have airworthiness lives of 1200 hours or 24 months, whichever occurs first. The calendar life of 24 months starts when new straps are installed in a main rotor hub and blade assembly, and are subjected to rotation on the helicopter. Refer to ASB 206-80-9, dated 3 June 1980.

8 Main rotor blade 206-010-200-029 will have been retired no later than 31 March 1976. Refer to ASB 206-75-10, dated 13 November 1975.

Table 4-1. Airworthiness Limitations Schedule (Cont)

NOTES (CONT):

9 Swashplate supports 206-010-452-001/-005/-109 with more than 1500 hours in service are subjected to a visual inspection every 50 hours. The supports may remain in service until a crack is found or until a total of 4800 hours time in service is accumulated. Refer to ASB 206-93-74 Rev. B, dated 4 April 1994.

10 Tail rotor blade 206-010-750 will have been retired no later than 1 July 1981. Refer to ASB 206-80-12, dated 9 September 1980.

11 Tail rotor yokes 206-010-788, 206-011-802 and trunnions 206-010-776-001, 206-011-803-001 are not authorized after 1 July 1981. Yokes are to be replaced concurrently with the replacement of tail rotor blade 206-010-750. See also note 10. Refer to ASB 206-75-4, dated 15 May 1975.

12 Tail rotor yokes 206-011-811-001/-005 are not authorized after 1 July 1981. Yokes were reidentified as 206-011-811-123/-125 concurrently with the replacement of tail rotor blade 206-010-750. Yokes that have been reidentified have an 1800-hour airworthiness life starting with the reidentification. Refer also to note 10.

13 Aluminum links 206-031-508-005/-007 have been removed from service. Refer to ASB 206-01-73-6, dated 19 September 1973 and FAA AD 73-8-3, dated 18 April 1973.

14 Duplex bearings 206-040-410-001/-103 installed in tail rotor gearbox 206-040-400-(ALL) are conditional. Duplex bearings 206-040-410-003/-005/-101 installed in tail rotor gearbox 206-040-402-(ALL) have a life of 3000 hours.

15 Part of squib assembly 30908. Retire squib no later than 15 years after date of manufacture. Dispose of time expired squib in accordance with local regulations.

16 Selected serial numbers of main rotor trunnion 206-011-113-103 will have been removed from service no later than 30 November 1994. Refer to ASB 206-94-80, dated 5 August 1994 for list of serial numbers affected.

17 Latch bolts 206-011-260-101/-103 that have a serial number with the prefix “SC”, purchased as spares will have been removed from service no later than 3 December 1992. Refer to ASB 206-92-70, dated 3 December 1992.

18 Selected serial numbers of tail rotor hub assemblies 206-011-810-015 and tail rotor yokes 206-011-811-009 must be removed from service. Refer to ASB 206-89-47 Rev. A, dated 29 August 1989 for list of serial numbers affected.

19 Strap retention pin 206-010-123-001 and fitting 206-010-155-007 have been removed from service. Refer to FAA AD 72-19-1, dated 7 September 1972.

20 Refer to ASB 206(04-1)-73-1, dated 25 June 1973.

21 Crosstube assemblies 206-050-107-(ALL) and 206-050-119-(ALL) must be removed from service. Refer to ASB 206-94-78, dated 11 April 1994.

22 Usable only with main rotor hub 206-011-100-127. Refer to TB 206-91-133 Rev. A, dated 1 July 1998.

23 Usable only on model 206B, S/N 5101 and subsequent. These part numbers are reserved for US Army, model TH-67 training helicopters. Refer to ASB 206-96-87 Rev. A, dated 22 March 1996.

Table 4-1. Airworthiness Limitations Schedule (Cont)

NOTES (CONT):

24 Oil cooler impeller 206-061-432-011 will have been removed from service no later than 1 March 1978. Refer to ASB 206-77-10 Rev. A, dated 21 February 1978.

25 Selected serial numbers of tail rotor yokes 206-011-819-101 must be removed from service. Refer to ASB 206-88-41, dated 28 January 1988 for list of serial numbers affected.

26 Selected serial numbers of tension torsion straps 206-011-147-007 and 206-011-154-101/-105 must be removed from service. Refer to ASB 206-89-46 Rev. A, dated 29 August 1989 for list of serial numbers affected.

27 Selected serial numbers of main rotor blades 206-010-200-033 must be removed from service. Refer to ASB 206-89-50 Rev. A, dated 29 November 1989 for list of serial numbers affected.

28 Selected serial numbers of tail rotor blades 206-016-201-113/-127 must be removed from service. Refer to ASB 206-90-57, dated 27 June 1990 for list of serial numbers affected.

29 Selected serial numbers of tail rotor blades 206-016-201-125/-127 must be removed from service. Refer to ASB 206-90-58 Rev. A, dated 31 October 1990 for list of serial numbers affected.

30 Refer to ASB 206A-12 Rev. A, dated 8 April 1970. Servo actuator 206-076-023 is equivalent to Hydraulic Research part number 41103750 and servo actuator 206-076-024 is equivalent to Hydraulic Research part number 41103650.

31 Refer to ASB 206A-14 Rev. A, dated 8 April 1970.

32 Cyclic control bellcrank support assembly 206-001-521-005/-006 will have been removed from service no later than 15 July 1969. Refer to ASB 206A-11 Rev. B, dated 29 September 1969.

33 Masts 206-010-332-005/-009/-013/-017/-121 are not listed and are conditional. Selected serial numbers of main rotor mast 206-010-332-121 will have been returned to Bell Helicopter Textron for metallurgical evaluation no later than 31 May 1987. Affected masts inspected at BHT and found to be acceptable have a suffix “U” added to the serial number. Refer to ASB 206-87-37, dated 23 April 1987 for list of serial numbers affected.

34 Selected serial numbers of sun gear 206-040-662-101 will have been removed from service no later than 15 January 1991. Refer to ASB 206-90-56 Rev. A, dated 15 January 1991 for list of serial numbers affected.

35 Fixed float landing gear crosstubes 206-050-169-001/-003 must be removed from service. Refer to ASB 206-94-81 Rev. A, dated 17 August 1994.

36 Emergency flotation landing gear crosstubes 206-050-134-001/-003/-005/-007/-011/-103/-105 must be removed from service. Refer to ASB 206-94-82 Rev. A, dated 17 April 1995.

37 Emergency lightweight flotation landing gear crosstubes 206-050-107-025/-027/-119/-121 must be removed from service. Refer to ASB 206-94-83, dated 6 September 1994.

38 Fixed float landing gear crosstubes 206-050-157-001/-003 must be removed from service. Refer to ASB 206-96-88, dated 3 June 1996.

Table 4-1. Airworthiness Limitations Schedule (Cont)

NOTES (CONT):

39 Usable only on model 206A, S/N 5001 through 5040. These part numbers are reserved for US Army, model TH-57 training helicopters.

40 Cylinder per DOT-3HT and DOT-E7218 specifications. Refer to IL GEN-93-52, dated 21 June 1993.

41 Cylinder per FAA specifications. Refer to IL GEN-93-52, dated 21 June 1993.

42 Upper collective tube 206-001-024-029 is not listed and is conditional.

43 Main rotor latch bolts 206-010-169-001/-003 and 206-011-122-003 must be removed from service. Refer to ASB 206-06-109, dated 25 July 2006, and Transport Canada AD CF-2006-23, dated 6 November 2006.

44 Part of squib assembly 29022971 and approved alternate for squib 30908. Retire squib no later than 15 years after date of manufacture. Dispose of time expired squib in accordance with local regulations.

45 Storage life of cutter assembly Y-1265-11-1, in original sealed container, is set at 60 months. Service life is 36 months from the time the cutter assembly is removed from the original sealed container. The 36-month service life must be contained within the 60-month storage life. Dispose of time expired squib in accordance with local regulations.
Example 1 – Cutter assembly stored for 24 months: 60 - 24 = 36-month service life.
Example 2 – Cutter assembly stored for 48 months: 60 - 48 = 12-month service life.
Example 3 – Cutter assembly stored for 1 month: 60 - 1 = 59 months, reduced to 36 months maximum service life.

46 Main rotor hub tension torsion straps 206-310-004 have an airworthiness life of 1200 hours or 48 months, whichever occurs first. The calendar life of 48 months starts when new straps are installed in a main rotor hub and blade assembly, and are subjected to rotation on the helicopter.

CHAPTER 5 — INSPECTIONS AND COMPONENT OVERHAUL SCHEDULE

TABLE OF CONTENTS

Paragraph Number	Title	Chapter/Section Number	Page Number
	INSPECTIONS AND COMPONENT OVERHAUL SCHEDULE		
5-1	General	5-00-00	5
5-2	Items Not Covered and Inspection Responsibility	5-00-00	5
5-3	Crash Damage	5-00-00	6
5-4	Types of Inspections	5-00-00	6
5-5	Definitions	5-00-00	7
5-6	Inspection and Overhaul Tolerance	5-00-00	8
	SCHEDULED INSPECTIONS		
5-7	Scheduled Inspections	5-00-00	11
5-8	Airframe Inspection Program	5-00-00	11
5-9	Airframe Progressive Inspection Programs	5-00-00	11
5-10	100-Hour Airframe Progressive Inspection Program	5-00-00	11
5-11	300-Hour Airframe Progressive Inspection Program	5-00-00	12
5-12	Airframe Periodic Inspection Program	5-00-00	13
5-13	100-Hour Airframe Periodic Inspection Program	5-00-00	13
5-14	300-Hour Airframe Periodic Inspection Program	5-00-00	13
5-15	Changing Inspection Program	5-00-00	14
5-16	100-Hour Airframe Progressive Inspection — Event No. 1	5-00-00	19
5-17	100-Hour Airframe Progressive Inspection — Event No. 2	5-00-00	29
5-18	100-Hour Airframe Progressive Inspection — Event No. 3	5-00-00	37
5-19	100-Hour Airframe Progressive Inspection — Event No. 4	5-00-00	41
5-20	100-Hour Airframe Periodic Inspection	5-00-00	49
5-21	300-Hour Airframe Progressive Inspection — Event No. 1	5-00-00	51
5-22	300-Hour Airframe Progressive Inspection — Event No. 2	5-00-00	57
5-23	300-Hour Airframe Progressive Inspection — Event No. 3	5-00-00	65
5-24	300-Hour Airframe Progressive Inspection — Event No. 4	5-00-00	73
5-25	300-Hour Airframe Progressive Inspection — Event No. 5	5-00-00	79
5-26	300-Hour Airframe Progressive Inspection — Event No. 6	5-00-00	87
5-27	300-Hour Airframe Periodic Inspection	5-00-00	93
5-28	100-Hour Inspection	5-00-00	95
5-29	300-Hour Inspection	5-00-00	97
5-30	1200-Hour Inspection	5-00-00	105
5-31	As Required by Manufacturer	5-00-00	107
5-32	Weekly Inspection	5-00-00	109
5-33	12-Month Inspection	5-00-00	111
5-34	12 Months of Component Operation	5-00-00	113
5-35	24-Month Inspection	5-00-00	115
5-36	300 Hours or 6 Months of Component Operation	5-00-00	119
5-37	600 Hours of Component Operation	5-00-00	121
5-38	600 Hours or 12 Months of Component Operation	5-00-00	125
5-39	1200 Hours of Component Operation	5-00-00	127
5-40	1200 Hours or 24 Months of Component Operation	5-00-00	131

TABLE OF CONTENTS (CONT)

Paragraph Number	Title	Chapter/Section Number	Page Number
5-41	1500 Hours of Component Operation	5-00-00	133
5-42	1500 Hours of Component Operation and Every 50 Hours Thereafter	5-00-00	137
5-43	2250 Hours or 60 Months of Component Operation	5-00-00	139
5-44	3000 Hours of Component Operation	5-00-00	141
	SPECIAL INSPECTIONS		
5-45	Special Inspections	5-00-00	143
5-46	After Fuel System Maintenance and/or Component Change	5-00-00	145
5-47	1 to 5 Hours After Each Installation	5-00-00	147
5-48	3 to 8 Hours After Each Installation	5-00-00	149
5-49	10 to 25 Hours After Each Installation	5-00-00	151
5-50	100 Hours After Each Installation	5-00-00	153
5-50A	Freewheel Lubrication System	5-00-00	154A
	CONDITIONAL INSPECTIONS		
5-51	Conditional Inspections	5-00-00	155
5-52	Hard Landing	5-00-00	157
5-53	Sudden Stoppage/Acceleration — Main Rotor — Power ON or OFF	5-00-00	163
5-54	Sudden Stoppage/Acceleration — Tail Rotor	5-00-00	169
5-55	Overspeed Main Rotor — 114% or Greater	5-00-00	173
5-56	Overtorque	5-00-00	177
5-57	Engine Compressor Stall or Surge	5-00-00	183
5-58	Lightning Strike	5-00-00	191
5-59	Engine Overtemp	5-00-00	197
5-60	Pylon Whirl	5-00-00	199
	COMPONENT OVERHAUL SCHEDULE		
5-61	Component Overhaul Schedule	5-00-00	201

FIGURES

Figure Number	Title	Page Number
5-1	Maintenance Zones	17
5-2	24-Month Inspection of Main Rotor Flight Control System Bolts	117
5-3	24-Month Fuel Vent/Purge Fitting Filter Inspection	118

TABLES

Table Number	Title	Page Number
5-1	100-Hour Airframe Progressive Inspection Events	11
5-2	300-Hour Airframe Progressive Inspection Events	12
5-3	300-Hour Airframe Progressive or 300-Hour Airframe Periodic Inspection Program Prerequisites	14
5-4	Special Inspections	144
5-5	Component Overhaul Schedule	202

INSPECTIONS AND COMPONENT OVERHAUL SCHEDULE

5-1. GENERAL

This chapter contains the time limit intervals and the requirements for the Scheduled Inspection, Special Inspection, Conditional Inspection, and for the Component Overhaul Schedule.

WARNING

FAILURE TO CORRECT CONDITIONS SUCH AS, BUT NOT LIMITED TO, CORROSION, EROSION, MECHANICAL DAMAGE, OR OBVIOUS WEAR FOUND DURING A SCHEDULED INSPECTION COULD SERIOUSLY AFFECT THE AIRWORTHINESS OF THE HELICOPTER.

The inspection intervals given in this chapter are the maximum permitted. Do not exceed these intervals. The owner/operator is responsible for increasing the scope and the frequency of the inspections as necessary. Make sure the helicopter is maintained safely during all unusual local changes, such as environmental conditions, helicopter use, etc. You can request changes to the requirements in this chapter through the local Aviation Authority.

The inspection intervals and the component overhaul schedule provided in this chapter are applicable only to Bell Helicopter Textron approved parts.

NOTE

The time period given for the overhaul of a component (or the failure to give a time period for the overhaul of a component) does not constitute a warranty of any kind. The only warranty applicable to the helicopter or any component is the warranty included in the Purchase Agreement for the helicopter or the component.

The Time Between Overhaul (TBO) and the inspection periods are determined through experience, tests, Lead The Fleet (LTF), or any other special programs and the judgement of Bell Helicopter Textron engineers. They are subject to change only by Bell Helicopter Textron or an approved Airworthiness Authority.

Changes to the TBO will be introduced by either revision to the Maintenance Manual, Chapter 5 or a Technical Bulletin.

Every calendar and hourly inspection is a thorough visual inspection to determine the airworthiness of the helicopter and the components. Qualified persons must do the inspections in accordance with quality standard aircraft practices and the applicable Maintenance Manuals. Bell Helicopter Textron considers that it is mandatory to obey all the applicable Alert Service Bulletins (ASB) and the Airworthiness Directives (AD).

Component operating time records are necessary for components that have scheduled maintenance procedures, which are different from those of the airframe. It is the owner/operator's responsibility to keep the Historical Service Records for the applicable component and to do the necessary maintenance procedures.

Before each inspection, remove or open the necessary cowlings, fairing, inspection doors, and panels.

5-2. ITEMS NOT COVERED AND INSPECTION RESPONSIBILITY

This manual does not include the specific inspection intervals for some components such as the compass calibration and the pitot static test. These specific inspection intervals are given by your government regulatory authority. Refer to their requirements for these specific inspections.

The owner/operator of the helicopter is responsible for the maintenance done on the helicopter and for ensuring that the specific time interval of any inspection procedure is not exceeded. It is the owner/operator's responsibility to:

1. Establish, maintain, and review the log books for discrepancies.

2. Make sure the Alert Service Bulletins (ASB), the Airworthiness Directives (AD), and the special

inspections are done when they are required to be done.

3. Make sure the scheduled inspections, the special inspections, and the required inspections for all of the installed kits are complied with.

4. Make sure all parts and components for which Historical Service Records are required have documented traceability to their original installation in the helicopter.

5. Make sure all limited life parts that have completed their published operating limits are replaced.

6. Make sure all of the components that have completed their published overhaul periods are overhauled.

7. Make sure all of the maintenance that is done on the helicopter is done by an approved maintenance organization.

The maintenance organization/person doing the maintenance is responsible for the quality of the maintenance done.

The owner/operator may choose to ask the maintenance organization/person doing the maintenance to perform the tasks listed by prior arrangement through a separate formal agreement.

5-3. CRASH DAMAGE

Because of the many possible combinations that can result from crash damage, it is not possible to include the specific repair tasks in this category. The helicopter mechanic must make an analysis of the crash damage for each situation. Do the repair in accordance with the degree of damage to the specific part and the applicable repair procedures in this manual. Call Bell Helicopter Textron Product Support Engineering with your analysis of the crash damage.

5-4. TYPES OF INSPECTIONS

1. The maintenance procedures may include scheduled inspections, special inspections, conditional inspections, component interim inspections, and component overhaul inspections.

a. Scheduled inspections must occur at specified operating intervals. The intervals may be in operating time (hours), cycles, torque events (RIN), calendar (days, months, years) or other assigned units. This makes sure that the helicopter is airworthy.

b. Special inspections are of a temporary nature or of a special interval that is not consistent with the scheduled inspections.

c. Conditional inspections do not occur at a specified time. A conditional inspection is the result of a known or suspected unusual event, known or suspected malfunctions, or defects.

d. An interim inspection occurs between overhauls.

e. The component overhaul schedule gives the elapsed operating time at which a component must be removed, disassembled, examined for condition, and overhauled, in accordance with data approved by Bell Helicopter Textron.

2. Lubrication and servicing requirements are in addition to those stated in this chapter (Chapter 12).

3. For corrosion control, refer to the Corrosion Control Guide, CSSD-PSE-87-001 and the BHT-ALL-SPM.

4. For the 250-C18/-C20/-C20B/J series engine, refer to the Rolls-Royce Operation and Maintenance Manual (5W2 or 10W2) for the scheduled inspection, special inspection, conditional inspection, and component overhaul schedule.

5. For the common Bell Helicopter Textron approved optional equipment that is integrated into this Maintenance Manual, refer to this chapter for the scheduled inspection, conditional inspection, component interim inspection, and component overhaul inspection.

6. For all other Bell Helicopter Textron approved equipment, refer to the applicable information in this Maintenance Manual or the specific Service Instruction (SI) for the scheduled inspection, special inspection, conditional inspection, component interim inspection, and component overhaul inspection.

7. For the inspection requirements for optional equipment approved under Supplement Type

Approval/Certificate (STA/STC), refer to the applicable STA/STC documentation. Maintenance and inspection of these items are the responsibility of the owner/operator.

5-5. DEFINITIONS

- Check, inspect, examine — Look carefully to find the condition of the component. Find how that condition relates to a specific standard.

- Condition — The state of an item compared to a known standard.

- Security — The presence of attaching parts that are properly tightened or appear to be, and the presence of properly installed (as required) locking devices such as lockwire, cotter pins, or other.

- Standard — A specified rule or measure used to find the condition of a component.

- Damage — Physical deterioration of a component.

- Discard — Reject a component that has damage that cannot be repaired. To permanently remove from service.

- Inspection — A procedure that includes checking, inspecting, and examining a system or a component.

- Non-scheduled inspection — An inspection that has not been scheduled.

- Periodic inspection — An inspection that is repeated at equal time intervals.

- Progressive inspection — A scheduled inspection that is divided into smaller segments. This makes the best use of the time and the resources available.

- Maintenance — The servicing and/or the repair of a helicopter, a system, or a component that keeps it serviceable.

- Preventive maintenance — To do small maintenance action(s) on a regular basis to prevent non-scheduled maintenance.

- Operating time — Actual flight or calendar time that must be recorded in the Historical Service Records or in the helicopter logs. The operating time is specified as:

  - Time in service (flight time) — The measured time that starts the moment the helicopter leaves the ground and continues until it touches the ground at the next point of landing. The time when the helicopter is on the ground, with the engine and the rotor turning, is not included.

  - Calendar time — The elapsed time starts on the day the inspection is completed, the component is installed, or the rotor is turned for the first time and ends on the last day of the month that the time limit expires. Calendar time is continuous. Calendar time does not stop when you remove a component, put the helicopter in storage, etc.

- Maintenance zone — A specified area of the helicopter that may contain more than one system or more than one group of related components. Maintenance zones (Figure 5-1) are used when you do a progressive inspection.

- Lead-The-Fleet (LTF) program — This is a program to validate the performance of an approved product improvement or a change to a maintenance interval. The engineering aspects of this change are approved. The program is closely monitored by Bell Helicopter Textron in an operational environment with selected operators.

- Special programs — These are approved programs that may be initiated under certain special conditions to meet specific requirements. These programs will be clearly defined through a plan and the engineering and maintenance aspects will be approved by the regulatory authorities.

5-6. INSPECTION AND OVERHAUL TOLERANCE

WARNING

DO NOT APPLY THESE TOLERANCES TO PARTS WITH A LIMITED AIRWORTHINESS LIFE (CHAPTER 4).

The Bell Helicopter Textron approved tolerance for scheduled inspections, special inspections, interim inspections, and overhaul intervals, unless otherwise stated, is 10% or up to a maximum of 300 hours operating time/6 months calendar time, whichever is less. The tolerances are established for maintenance scheduling convenience only.

Scheduled inspections, special inspections, interim inspections, or overhaul intervals required beyond the stated tolerances must be approved by Product Support Engineering.

NOTE

The following is only applicable for those operators whose governing aviation authority requires to specifically approve the inspection and overhaul tolerance.

If approval of the inspection and overhaul tolerance is required by the applicable governing aviation authority, this is the responsibility of the owner/operator.

Refer to the Rolls-Royce 250-C18/-C20/-C20B/J Operation and Maintenance Manual (5W2 or 10W2) for inspection and overhaul tolerances.

The following provide examples of when hourly, calendar, or hourly/calendar inspection tolerances have been applied:

Hourly Example (10% or up to a maximum of 300 hours, whichever is less):

300-HOUR INSPECTION DUE AT:	MAXIMUM ALLOWED TOLERANCE	INSPECTION CARRIED OUT AT:	NEXT 300-HOUR INSPECTION DUE AT:
3400 Hours	10% of 300 hours = 30 hours	3430 Hours (10% tolerance applied)	3730 Hours
3730 Hours	10% of 300 hours = 30 hours	3750 Hours (within 10% tolerance)	4050 Hours
4050 Hours	10% of 300 hours = 30 hours	4050 Hours (tolerance not applied)	4350 Hours

Calendar Example (10% or up to a maximum of 6 months calendar time, whichever is less):

12-MONTH INSPECTION DUE ON:	MAXIMUM ALLOWED TOLERANCE	INSPECTION CARRIED OUT ON:	NEXT 12-MONTH INSPECTION DUE ON:
June 10, 2010	10% of 12 months = 1.2 months	July 12, 2010 (within 10% tolerance)	July 31, 2011 △1
July 31, 2011	10% of 12 months = 1.2 months	June 15, 2011 (completed early)	June 30, 2012 △1
June 30, 2012	10% of 12 months = 1.2 months	June 30, 2012 (tolerance not applied)	June 30, 2013 △1

NOTE:

△1 The last day of the month applies for the next inspection (paragraph 5-5, calendar time).

Hourly/Calendar Example (10% or up to a maximum of 300 hours operating time/6 months calendar time, whichever is less):

1200-HOUR/ 24-MONTH INSPECTION DUE AT:	MAXIMUM ALLOWED TOLERANCE	INSPECTION CARRIED OUT AT:	NEXT 1200-HOUR/ 24-MONTH INSPECTION DUE AT:
3400 Hours/ June 30, 2010	10% of 1200 hours = 120 hours or 10% of 24 months = 2.4 months	3400 Hours/August 15, 2010 (within 10% calendar tolerance)	4600 Hours/ August 31, 2012 △1
4600 Hours/ August 31, 2012	10% of 1200 hours = 120 hours or 10% of 24 months = 2.4 months	4720 Hours/April 2, 2012 (10% hourly tolerance applied)	5920 Hours/ April 30, 2014 △1
5920 Hours/ April 30, 2014	10% of 1200 hours = 120 hours or 10% of 24 months = 2.4 months	5980 Hours/July 3, 2014 (within 10% hourly and calendar tolerance)	7180 Hours/ July 31, 2016 △1

NOTE:

△1 The last day of the month applies for the next inspection (paragraph 5-5, calendar time).

5-7. SCHEDULED INSPECTIONS

WARNING

FAILURE TO CORRECT CONDITIONS SUCH AS, BUT NOT LIMITED TO, CORROSION, EROSION, MECHANICAL DAMAGE, OR OBVIOUS WEAR FOUND DURING A SCHEDULED INSPECTION COULD SERIOUSLY AFFECT THE AIRWORTHINESS OF THE HELICOPTER.

Scheduled inspections include the airframe and the component inspections. The scheduled airframe inspection intervals are related to the airframe operating time. The component inspection intervals are related to the component operating time.

5-8. AIRFRAME INSPECTION PROGRAM

Bell Helicopter Textron (BHT) has developed airframe inspection programs to provide you with the flexibility to permit maximum helicopter use. Depending on the configuration of the helicopter, a 100 or 300-hour airframe progressive inspection as well as a 100 or 300-hour airframe periodic inspection is available. You may choose one of these BHT inspection programs or you can design your own program. You are responsible for the selection of an inspection program and for its approval by the governing civil aviation authority.

5-9. AIRFRAME PROGRESSIVE INSPECTION PROGRAMS

If you choose one of the airframe progressive inspection programs, you must first get approval from your local airworthiness authority. The progressive inspections are divided into separate events of similar workload (Table 5-1, Table 5-2, and Figure 5-1).

NOTE

All conditions of Table 5-3 must be met to utilize the 300-hour airframe progressive inspection.

Depending on the helicopter configuration, you have the option to either use the 100-hour airframe progressive inspection program or the 300-hour airframe progressive inspection program. To determine helicopter eligibility to utilize the 300-hour airframe progressive inspection program, refer to Table 5-3.

5-10. 100-HOUR AIRFRAME PROGRESSIVE INSPECTION PROGRAM

The 100-hour airframe progressive inspection program has 4 events. Events occur at intervals of 25 hours. After you complete event No. 4, the cycle begins again with event No. 1 (Table 5-1). You must do a minimum of one complete cycle (all four events) within 12 calendar months. If you do not complete all four events in a 12 calendar month period, the remaining events must be completed prior to operating the helicopter.

Table 5-1. 100-Hour Airframe Progressive Inspection Events

AIRFRAME HOURS	EVENT NUMBER	MAINTENANCE ZONES
25	1	1, 2, and 3
50	2	4 and 5
75	3	6
100	4	7, 8, 9, and 10

In addition to performing the 100-hour airframe progressive inspection program, you also need to perform and record the following scheduled inspections:

NOTE

Every 300 hours of operation, helicopters completing the 100-hour airframe progressive inspection program also need to accomplish the 300-hour inspection.

- 300-hour inspection
- 1200-hour inspection
- As required by manufacturer

- Weekly inspection
- 12-month inspection
- 12 months of component operation
- 24-month inspection
- 300 hours or 6 months of component operation
- 600 hours of component operation
- 600 hours or 12 months of component operation
- 1200 hours of component operation
- 1200 hours or 24 months of component operation
- 1500 hours of component operation
- 1500 hours of component operation and every 50 hours thereafter
- 2250 hours or 60 months of component operation
- 3000 hours of component operation

5-11. 300-HOUR AIRFRAME PROGRESSIVE INSPECTION PROGRAM

The 300-hour airframe progressive inspection program has 6 events. Events occur at intervals of 50 hours. After you complete event No. 6, the cycle begins again with event No. 1 (Table 5-2). You must do a minimum of one complete cycle (all six events) within 12 calendar months. If you do not complete all six events in a 12 calendar month period, the remaining events must be completed prior to operating the helicopter.

Table 5-2. 300-Hour Airframe Progressive Inspection Events

AIRFRAME HOURS	EVENT NUMBER	MAINTENANCE ZONES
50	1	1 and 2
100	2	3

Table 5-2. 300-Hour Airframe Progressive Inspection Events (Cont)

AIRFRAME HOURS	EVENT NUMBER	MAINTENANCE ZONES
150	3	4
200	4	5 and 6
250	5	7 and 8
300	6	9 and 10

In addition to performing the 300-hour airframe progressive inspection program, you also need to perform and record the following scheduled inspections:

NOTE

Helicopters completing the 300-hour airframe progressive inspection program also need to accomplish the 100-hour inspection.

- 100-hour inspection
- 1200-hour inspection
- As required by manufacturer
- Weekly inspection
- 12-month inspection
- 12 months of component operation
- 24-month inspection
- 300 hours or 6 months of component operation
- 600 hours of component operation
- 600 hours or 12 months of component operation
- 1200 hours of component operation
- 1200 hours or 24 months of component operation
- 1500 hours of component operation

- 1500 hours of component operation and every 50 hours thereafter
- 2250 hours or 60 months of component operation
- 3000 hours of component operation

5-12. AIRFRAME PERIODIC INSPECTION PROGRAM

The airframe periodic inspection combines all of the events of the 100 or 300-hour progressive inspection into one event.

NOTE

All conditions of Table 5-3 must be met to utilize the 300-hour airframe periodic inspection.

Depending on the helicopter configuration, you have the option to either use the 100-hour airframe periodic inspection program or the 300-hour airframe periodic inspection program. To determine the helicopter eligibility to utilize the 300-hour airframe periodic inspection program, refer to Table 5-3.

5-13. 100-HOUR AIRFRAME PERIODIC INSPECTION PROGRAM

Do a 100-hour airframe periodic inspection program every 12 calendar months or every 100 hours, whichever occurs first. You must do a minimum of one complete 100-hour airframe periodic inspection within 12 calendar months.

In addition to performing the 100-hour airframe periodic inspection program, you also need to perform and record the following scheduled inspections:

NOTE

Every 300 hours of operation, helicopters completing the 100-hour airframe periodic inspection program also need to accomplish the 300-hour inspection.

- 300-hour inspection
- 1200-hour inspection
- As required by manufacturer
- Weekly inspection
- 12-month inspection
- 12 months of component operation
- 24-month inspection
- 300 hours or 6 months of component operation
- 600 hours of component operation
- 600 hours or 12 months of component operation
- 1200 hours of component operation
- 1200 hours or 24 months of component operation
- 1500 hours of component operation
- 1500 hours of component operation and every 50 hours thereafter
- 2250 hours or 60 months of component operation
- 3000 hours of component operation

5-14. 300-HOUR AIRFRAME PERIODIC INSPECTION PROGRAM

Do a 300-hour airframe periodic inspection program every 12 calendar months or every 300 hours, whichever occurs first. You must do a minimum of one complete 300-hour airframe periodic inspection within 12 calendar months.

In addition to performing the 300-hour airframe periodic inspection program you also need to perform and record the following scheduled inspections:

NOTE

Helicopters completing the 300-hour airframe periodic inspection program also need to accomplish the 100-hour inspection.

- 100-hour inspection
- 1200-hour inspection

- As required by manufacturer
- Weekly inspection
- 12-month inspection
- 12 months of component operation
- 24-month inspection
- 300 hours or 6 months of component operation
- 600 hours of component operation
- 600 hours or 12 months of component operation
- 1200 hours of component operation
- 1200 hours or 12 months of component operation
- 1500 hours of component operation
- 1500 hours of component operation and every 50 hours thereafter
- 2250 hours or 60 months of component operation
- 3000 hours of component operation

5-15. CHANGING INSPECTION PROGRAM

You must use either the airframe periodic inspection program or the airframe progressive inspection program from the start. You can change between the two programs at any airframe operating time as follows:

- To change from a 100-hour airframe progressive inspection program to a 100-hour airframe periodic inspection program, do a complete 100-hour airframe periodic inspection.
- To change from a 100-hour airframe periodic inspection program to a 100-our airframe progressive inspection program, do a complete 100-hour airframe periodic inspection.
- To change from a 300-hour airframe progressive inspection program to a 300-hour airframe periodic inspection program, do a complete 300-hour airframe periodic inspection.
- To change from a 300-hour airframe periodic inspection program to a 300-hour airframe progressive inspection program, do a complete 300-hour airframe periodic inspection.

Table 5-3. 300-Hour Airframe Progressive or 300-Hour Airframe Periodic Inspection Program Prerequisites

NOMENCLATURE	PART NUMBER △2	BULLETIN REFERENCE	ACCEPTABLE ALTERNATES
Main Rotor Hub Assembly	206-011-100-127	TB 206-91-133	
Mast Assembly	206-040-002-111	TB 206-99-165	
Swashplate and Support Assembly	206-010-450-129	TB 206-00-171	
Transmission Assembly	206-040-002-115	TB 206-99-167, conversion per Part 1 to 206-040-002-117 and Part 2 to 206-040-002-115	

Table 5-3. 300-Hour Airframe Progressive or 300-Hour Airframe Periodic Inspection Program Prerequisites (Cont)

NOMENCLATURE	PART NUMBER △2	BULLETIN REFERENCE	ACCEPTABLE ALTERNATES
Main Driveshaft Assembly (Grease Lubricated)	206-040-015-107	ASB 206-96-76 and TB 206-06-186	
Rotor Brake Disc	9440904	TB 206-06-186	
Freewheel Assembly	206-040-270-117	TB 206-01-175	
Oil Cooler Blower Impeller	206-061-432-109	ASB 206-86-33	
Riveted Aft Short Shaft	206-040-383-101	TB 206-06-186	
Riveted Tail Rotor Driveshaft Assembly	206-040-387-103 and 105	TB 206-06-186	
Tail Rotor Gearbox Assembly	206-040-402-111	TB 206-99-168	
Tail Rotor Hub Assembly	206-011-810-139	TB 206-94-148	
Forward Engine Mount Fittings	206-031-629-103	BHT-206-SRM	
Tailboom Attachment Fittings and Longeron Assembly	206-031-314-201A or 206-031-314-201B	TB 206-12-199	
Aft Fuselage Bulkhead	407-030-027-105	TB 206-12-199	
Tailboom Assembly	206-031-004-155		
Stabilizer Assembly, Left Side	206-020-123-011		
Stabilizer Assembly, Right Side	206-020-123-012		
Stabilizer Spar	206-020-120-011		
Aft Crosstube, Forward Support Assembly (STA 125)	206-031-301-121S	TB 206-04-182	
Aft Crosstube, Left Support Assembly	206-031-301-129S	TB 206-04-182	
Aft Crosstube, Right Support Assembly	206-031-301-130S	TB 206-04-182	
Aft Crosstube, Aft Support Assembly (STA 130)	206-031-301-269S	TB 206-04-182	

Table 5-3. 300-Hour Airframe Progressive or 300-Hour Airframe Periodic Inspection Program Prerequisites (Cont)

NOMENCLATURE	PART NUMBER △2	BULLETIN REFERENCE	ACCEPTABLE ALTERNATES
FACET Scavenge Oil Filter System △4	Purolator Kit Number STC # SH200GL		

NOTES:

1. Table 5-3 is not to be used as a configuration listing for the installation of components on 206A/B/B3 Series Helicopters. It is only provided as a prerequisite listing to determine applicability to use the 300-hour airframe progressive inspection program or 300-hour airframe periodic inspection program, as applicable. Refer to the bulletins listed within the table for configuration data as required.

△2 To qualify for the 300-hour airframe progressive inspection program or the 300-hour airframe periodic inspection program, the helicopter must have all of the parts listed installed (or subsequent part numbers to those listed based on configuration/eligibility requirements).

3. If the helicopter does not have all of the parts listed in this table installed, the helicopter is limited to either the 100-hour airframe progressive inspection or the 100-hour airframe periodic inspection.

△4 FACET scavenge oil filter system available from Purolator Facet, Inc., www.purolator-facet.com.

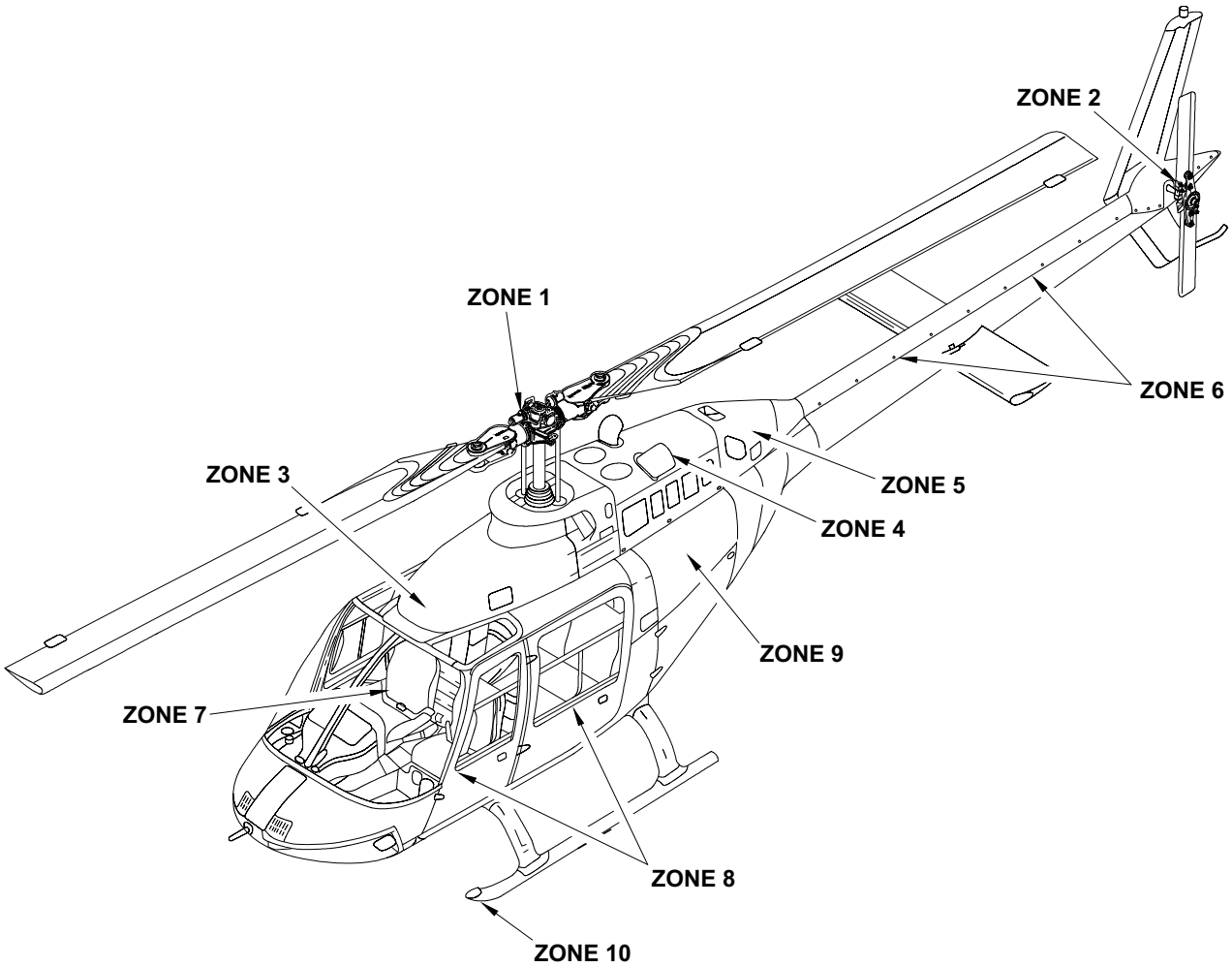

Zone 1 - Main rotor hub and blade assembly
Zone 2 - Tail rotor hub and blade assembly
Zone 3 - Forward top deck
Zone 4 - Power plant
Zone 5 - Aft top deck
Zone 6 - Tailboom
Zone 7 - Cabin interior
Zone 8 - Foward fuselage
Zone 9 - Aft fuselage
Zone 10 - Landing gear

206AB_MM_05_0001

Figure 5-1. Maintenance Zones

PROGRESSIVE INSPECTIONS

5-16. 100-HOUR AIRFRAME PROGRESSIVE INSPECTION — EVENT NO. 1

DATA REFERENCE	INSPECTION TASK DESCRIPTION	INITIAL MECH	INITIAL OTHER
	DATE: _____ **W.O.** _____ **FACILITY:** _____ **HELICOPTER S/N:** _____ **REGISTRY NO.:** _____ **TOTAL TIME:** _____ **SIGNATURE:** _____		
	ZONE 1 — MAIN ROTOR SYSTEM		
Chapter 11	**PLACARDS AND MARKINGS**		
	1. Examine the placards, decals, and markings. Make sure they are readable, correctly applied, and in agreement with the applicable configuration of your helicopter.		
Chapter 62	**MAIN ROTOR SYSTEM**		
	1. Verify main rotor flap restraint for freedom of movement, and for condition and security.		
	2. Examine static stops and mast for evidence of mast bumping.		
	3. Examine main rotor blades for cleanliness and overall condition. Examine for cracks, corrosion, and de-bonding of doublers.		
	4. Examine the tip weight cap for corrosion, cracks, erosion, and deformation.		
	5. Examine the following main rotor hub assembly components for condition and security: **a.** Mast nut **b.** Trunnion		

PROGRESSIVE INSPECTIONS

5-16. 100-HOUR AIRFRAME PROGRESSIVE INSPECTION — EVENT NO. 1 (CONT)

DATA REFERENCE	INSPECTION TASK DESCRIPTION	INITIAL MECH	INITIAL OTHER
	c. Pillow blocks **d.** Grips **e.** Pitch horns **f.** Static stops **6.** Examine pitch horn trunnion bearings for evidence of wear, damage, and for security. **7.** Torque check pillow block retention hardware 84 to 107 inch-pounds (9.4 to 12 Nm). Examine for misalignment of anti-slippage marks (ASB 206-97-90). **8.** Examine main rotor yoke for corrosion or mechanical damage as follows:		
BHT-206A/B/L-Series-CR&O, Chapter 62	**a.** Examine fillet radius of both yoke spindles inboard of wear sleeves for evidence of corrosion. If corrosion is visible, remove with fine abrasive pad (C-407). If corrosion cannot be removed with pads, or is extensive, disassemble hub for inspection and repair. **NOTE** If the main rotor hub must be disassembled, omit remaining steps. **b.** Examine entire yoke centre section (inboard and outboard surfaces) for damage. **c.** Touch up all repaired areas or areas of bare metal in accordance with applicable main rotor hub inspection and repair instructions. **d.** Ensure no sealant voids are visible around shields (up to and including hub assembly 206-011-100-021) or wear sleeve, strap fittings, and grip closure. Recoat with sealant (C-308) as required.		

PROGRESSIVE INSPECTIONS

5-16. 100-HOUR AIRFRAME PROGRESSIVE INSPECTION — EVENT NO. 1 (CONT)

DATA REFERENCE	INSPECTION TASK DESCRIPTION	INITIAL MECH	INITIAL OTHER
	ZONE 2 — TAIL ROTOR ASSEMBLY		
Chapter 11	**PLACARDS AND MARKINGS**		
	1. Examine the placards, decals, and markings. Make sure they are readable, correctly applied, and in agreement with the applicable configuration of your helicopter.		
Chapter 64	**TAIL ROTOR ASSEMBLY**		
	1. Clean tail rotor blades to maintain visibility of warning stripes.		
BHT-206A/B/L-Series-CR&O, Chapter 64	**2.** Examine the following tail rotor hub assembly components for condition and security of attachment:		
	a. Yoke		
	b. Pitch horns		
	c. Trunnion and trunnion caps		
	d. Counterweight hardware		
Chapter 64	**3.** Examine tail rotor blades as follows:		
	a. Tip block rivets for damage, corrosion, erosion, and looseness.		
	b. Skin for bulges, nicks, dents, scratches, or other damage.		
	c. Deformed or cracked skin in the area of the chordwise weights.		
	d. Leading edge for erosion, nicks, dents, or scratches.		
	e. Bonded joints of blade skin mating area for suspected voids or cracks. Pay particular attention in the area of tip block and doublers.		
	f. Feathering bearings for looseness and cracks in uniball.		

PROGRESSIVE INSPECTIONS

5-16. 100-HOUR AIRFRAME PROGRESSIVE INSPECTION — EVENT NO. 1 (CONT)

DATA REFERENCE	INSPECTION TASK DESCRIPTION	INITIAL MECH	INITIAL OTHER
	4. Examine the following tail rotor hub and blade assembly attaching components for condition and security: **a.** Spacer **b.** Rubber bumper **c.** Static stop **d.** Nut **e.** Balance wheel		
	ZONE 3 — FORWARD DECK		
Chapter 11	**PLACARDS AND MARKINGS** **1.** Examine the placards, decals, and markings. Make sure they are readable, correctly applied, and in agreement with the applicable configuration of your helicopter.		
Chapter 71	**AIRFRAME (FORWARD DECK)** **1.** Remove and examine forward fairing for condition and security. **2.** Examine all fairing and cowling latches and/or fasteners for condition **3.** Examine top deck for condition, leaks, and security. **4.** Clean transmission deck. **5.** Examine air induction cowling for condition and security, and plenum for damage, obstructions, and cleanliness. Examine intake fairing windows for damage and cleanliness. **6.** Examine inlet screen, if installed, for missing or damaged wires and rivets. **7.** Examine particle separator, if installed, vortex tubes, ejector tubes, and ejector nozzles for cleanliness, condition, and security.		

PROGRESSIVE INSPECTIONS

5-16. 100-HOUR AIRFRAME PROGRESSIVE INSPECTION — EVENT NO. 1 (CONT)

DATA REFERENCE	INSPECTION TASK DESCRIPTION	INITIAL MECH	INITIAL OTHER
	8. Examine forward deck drains to ensure absence of obstruction.		
	9. Examine antennas for condition and security.		
	10. After completion of the inspection, make sure to reinstall all the panels, fairings, and cowlings removed during inspection.		
Chapter 67	**CONTROLS**		
	1. Examine the following flight control components for signs of interference, corrosion, wear, mechanical damage, and security:		
	a. Control tubes		
	b. Links		
	c. Rod and bearings		
	d. Bellcranks		
	e. Bellcrank supports		
	f. Attaching bolts and nuts		
	2. Inspect main rotor pitch links with a 3X magnifying glass for damage, corrosion, and cracks. Give particular attention to swaged ends at jam nut or inserts.		
Chapter 76	**3.** Examine N_2 control linkages on forward deck for condition and security. Pay particular attention to the jackshaft assembly for damage or evidence of twisting.		
	4. Verify all control tubes and bellcranks for freedom of travel throughout range.		
Chapter 62 and Chapter 63	**SWASHPLATE ASSEMBLY AND MAST**		
	1. Clean swashplate assembly and mast.		
	2. Disconnect main rotor pitch links from outer ring.		

PROGRESSIVE INSPECTIONS

5-16. 100-HOUR AIRFRAME PROGRESSIVE INSPECTION — EVENT NO. 1 (CONT)

DATA REFERENCE	INSPECTION TASK DESCRIPTION	INITIAL MECH	INITIAL OTHER
	3. Disconnect idler (drive) link from outer ring. **4.** Examine swashplate drive assembly for axial, radial, and accumulative wear. **5.** Examine idler (drive) link for mechanical damage and corrosion damage. Disconnect idler (drive) link from outer ring. **6.** Disconnect boot from swashplate outer ring and lift up temporarily. Examine boot for evidence of deterioration. **7.** Verify condition of duplex bearing, before lubrication, as follows: **a.** Rotate outer ring to check duplex bearing for condition. Bearing must be smooth and show no evidence of roughness, binding, dragging, or looseness. **8.** Examine pivot sleeve slot sidewalls for wear or deterioration. **9.** Examine pivot sleeve bearings for wear, deterioration, and evidence of excessive axial play between pivot sleeve and swashplate support. **10.** Examine collar set bushings for cracks and damage. **11.** Examine swashplate support and uniball surfaces for mechanical damage and corrosion damage. **12.** Examine collective lever for mechanical damage and corrosion damage. Examine collective lever to sleeve assembly pins for condition. **13.** Examine inner ring for condition. Examine for evidence of contact with sleeve assembly. **14.** Examine outer ring for condition. **15.** Examine the upper inside diameter of swashplate support for evidence of contact with the mast pole. **16.** Connect and secure boot, idler (drive) link, and main rotor pitch links to outer ring.		

PROGRESSIVE INSPECTIONS

5-16. 100-HOUR AIRFRAME PROGRESSIVE INSPECTION — EVENT NO. 1 (CONT)

DATA REFERENCE	INSPECTION TASK DESCRIPTION	INITIAL MECH	INITIAL OTHER
	17. Examine swashplate assembly for condition and security.		
Chapter 63	**18.** Examine mast for condition.		
Chapter 62 and Chapter 63	**19.** Ensure no sealant voids are visible around the swashplate drive collar set. Recoat with adhesive (C-307) as required.		
Chapter 29	**<u>HYDRAULIC SYSTEM</u>**		
	1. Examine rigid and flexible fluid lines for chafing, leaks, and security.		
	2. Examine hydraulic pump for leaks and general condition.		
	3. Examine hydraulic reservoir for leaks and general condition		
	4. Examine servo actuators for leaks, condition, and security.		
Chapter 67	**5.** Examine servo actuator support for condition.		
ASB 206-76-1	**a.** If installed, inspect hydraulic actuator support 206-001-520-005 as follows: • Visually inspect the two forward webs of the support assembly for cracks with a 5X magnifying glass. All cracks reported in the support assembly have originated in the top edge of the forward web. • If a crack is found, remove and replace the support assembly. Notify Product Support Engineering concerning any assembly found cracked.		
	6. Verify linkage pivot bolts on hydraulic servo actuators for freedom of rotation and security.		
Chapter 29	**7.** Examine hydraulic filter red indicator button. Button should not be extended.		
Chapter 12	**8.** Verify fluid level in hydraulic reservoir. Replenish as required. Replace fluid if color has changed or if fluid emits bad odor.		
	9. Examine relief valve and solenoid valve for leaks, condition, and security.		

PROGRESSIVE INSPECTIONS

5-16. 100-HOUR AIRFRAME PROGRESSIVE INSPECTION — EVENT NO. 1 (CONT)

DATA REFERENCE	INSPECTION TASK DESCRIPTION	INITIAL MECH	INITIAL OTHER
Chapter 63	**TRANSMISSION AND PYLON ASSEMBLY** **1.** Examine the following pylon support components for condition and security: **a.** Pylon support link assemblies and bearing for damage and deterioration. **b.** Pylon support link assemblies bearing for damage and deterioration. **c.** Forward and aft deck fittings and surrounding structure. **d.** Deck fitting spherical bearings. **e.** Drag pin and bearing for damage and deterioration. **f.** Static stop plate on deck for condition and sheared rivets. **g.** Isolation mount for evidence of main driveshaft contact and general condition and security. **h.** All pylon support hardware for security of attachment. **2.** Examine transmission assembly for condition and security. **3.** Examine transmission oil cooler for condition, security, and obstructions to air flow. **4.** Examine transmission oil cooler air duct for condition and security. Give special attention to chafing damage. **5.** Examine transmission assembly for evidence of oil leakage. **6.** Examine all fluid lines for chafing, damage, and evidence of leakage. **7.** Examine transmission oil for evidence of contamination. **8.** Inspect all transmission chip detectors, including mast bearing chip detector, if installed, for accumulated material.		

PROGRESSIVE INSPECTIONS

5-16. 100-HOUR AIRFRAME PROGRESSIVE INSPECTION — EVENT NO. 1 (CONT)

DATA REFERENCE	INSPECTION TASK DESCRIPTION	INITIAL MECH	INITIAL OTHER
Chapter 96	**9.** Perform operational check of all transmission chip detectors. **10.** Ensure no sealant voids are visible around deck mounted supports, fittings, and isolation mount. Reapply sealant (C-308) as required.		
Chapter 63	**MAIN DRIVESHAFT** **1.** Examine main driveshaft as follows: **a.** Examine main driveshaft for visual damage and couplings for grease leakage. **b.** Check driveshaft for freedom and smoothness of axial movement. **c.** Examine main driveshaft attachment bolts for security. **NOTE** TEMP-PLATE indicator dots are of a white or gray color that turn black when exposed to an overtemperature condition. Chemical contamination can also cause the indicating dots to turn black. **d.** Inspect TEMP-PLATES for evidence of overheating indication, deterioration, debonding, or excessive discoloration of the epoxy overcoating.		
Chapter 96	**ELECTRICAL** **1.** Examine all electrical components, wires, cables, and connectors in the area of the forward deck and transmission for chafing, general condition, and security.		

PROGRESSIVE INSPECTIONS

5-16. 100-HOUR AIRFRAME PROGRESSIVE INSPECTION — EVENT NO. 1 (CONT)

DATA REFERENCE	INSPECTION TASK DESCRIPTION	INITIAL MECH	INITIAL OTHER
	GROUND RUN		
	CAUTION GROUND RUN OF HELICOPTER TO BE ACCOMPLISHED BY QUALIFIED PERSONNEL ONLY.		
Chapter 12	**1.** Make sure applicable servicing requirements have been carried out.		
	2. Check oil level of transmission, hydraulic tank, engine, and tail rotor gearbox prior to running helicopter.		
	3. Make sure that helicopter is ready for ground run and that surrounding area is clear.		
BHT-206A-FM-1, BHT-206B-FM-1, BHT-206B3-FM-1	**4.** Start the helicopter and conduct ground run at 100% N_R to check for leaks, and ensure all systems are operational, and parameters are within Flight Manual limitations.		
	5. Shut down the helicopter.		

PROGRESSIVE INSPECTIONS

5-17. 100-HOUR AIRFRAME PROGRESSIVE INSPECTION — EVENT NO. 2

DATA REFERENCE	INSPECTION TASK DESCRIPTION	INITIAL MECH	INITIAL OTHER
	DATE: _____ **W.O.** _____		
	FACILITY: _____		
	HELICOPTER S/N: _____		
	REGISTRY NO.: _____		
	TOTAL TIME: _____		
	SIGNATURE: _____		
	ZONE 4 — POWER PLANT		
Chapter 11	**PLACARDS AND MARKINGS**		
	1. Examine the placards, decals, and markings. Ensure they are readable, correctly applied, and in agreement with the applicable configuration of your helicopter.		
	AIRFRAME (POWER PLANT AREA)		
Chapter 71	**1.** Examine firewalls for condition and security.		
	2. Examine engine cowlings and doors for condition and security. Using a bright light and mirror, inspect exposed upper and lower edges of the joints between aluminum longerons and titanium engine pan. Edge of sealant coating should be visible. No indications of corrosion or cracks are acceptable.		
	3. Examine engine pan area for evidence of loose fasteners and damage. Restore cracked or missing sealant form engine pan.		
	4. Examine engine pan drains. Make sure that they are not clogged.		
Chapter 28	**5.** Examine airframe fuel filter assembly, if installed, for evidence of leakage and security.		

PROGRESSIVE INSPECTIONS

5-17. 100-HOUR AIRFRAME PROGRESSIVE INSPECTION — EVENT NO. 2 (CONT)

DATA REFERENCE	INSPECTION TASK DESCRIPTION	INITIAL MECH	INITIAL OTHER
Chapter 71	**6.** Examine engine mount legs for condition and security. Pay particular attention for loose fasteners. On helicopters with clamshell acoustic mounts, pay particular attention for correct sealing and for signs of corrosion on engine leg tubes.		
	7. Examine engine mount fittings for condition and security.		
Applicable Service Instruction	**8.** Examine rotor brake (if installed) for condition and security.		
Chapter 96	**9.** Examine the primary electrical ground connection in engine pan area for condition and security.		
	POWER PLANT		
Rolls-Royce 250 Series Operation and Maintenance Manual, 5W2 or 10W2	**1.** Perform engine inspection per the applicable Rolls-Royce Operation and Maintenance Manual.		
Chapter 71	**2.** Examine engine inlet bellmouth for obstruction and general condition.		
	3. Examine engine compartment hardware for security of attachment.		
	4. Examine engine for evidence of fuel or oil leaks.		
	5. Examine all flexible and rigid lines for condition and security.		
	a. Pay particular attention for chafing damage and kinked lines.		
	6. Examine exhaust stacks and clamps for condition and security.		
	7. Examine all engine-mounted accessories for condition and security.		

PROGRESSIVE INSPECTIONS

5-17. 100-HOUR AIRFRAME PROGRESSIVE INSPECTION — EVENT NO. 2 (CONT)

DATA REFERENCE	INSPECTION TASK DESCRIPTION	INITIAL MECH	INITIAL OTHER
Chapter 76	**8.** Examine the engine anti-ice actuator and mechanism for condition and security.		
Chapter 76	**9.** Examine fuel control lever bolt hole and bolt for wear. Replace parts as required.		
	10. DELETED		
	11. DELETED		
Chapter 76	**12.** Examine engine controls for condition and security.		
	13. Make sure of operation of engine N_1 control as follows:		
	a. Make sure of proper throttle friction.		
	b. Examine freedom of full throttle grip travel and idle release operation. Bring back to closed position. Examine copilot throttle, if installed.		
	c. Make sure of fuel control stop lever contact with minimum and maximum stops before throttle grip gets to travel limit.		
	NOTE If dual controls are installed, it is permitted for pointer to be 0.078 inch (1.98 mm) below 30° mark when copilot twist grip is used.		
	d. Turn pilot throttle grip to idle detent. Fuel control pointer must be no more than 0.078 inch (1.98 mm) below the 30° mark on the quadrant. Do again for copilot throttle grip, if installed.		
	e. Examine control linkage for too much looseness, lost motion, and binding.		
	14. Make sure of operation of engine N_2 control as follows:		
	a. Put N_2 governor actuator to full DECREASE (extended).		
	b. Lift collective stick full up.		

PROGRESSIVE INSPECTIONS

5-17. 100-HOUR AIRFRAME PROGRESSIVE INSPECTION — EVENT NO. 2 (CONT)

DATA REFERENCE	INSPECTION TASK DESCRIPTION	INITIAL MECH	INITIAL OTHER
	c. Position N_2 governor actuator to full INCREASE (retracted).		
	d. Verify for clearance between governor stop and lever stop arm.		
	e. Lower collective stick full down.		
	f. Position N_2 governor actuator to full DECREASE (extended).		
	g. Verify for clearance between governor stop and lever stop arm.		
Chapter 71	**h.** Verify control linkage for excessive looseness, lost motion, and binding.		
	DRIVETRAIN		
Chapter 63	**1.** Examine freewheel assembly for condition, leaks, and security.		
Chapter 96	**2.** Examine the freewheel unit chip detector for accumulated material.		
Chapter 65	**3.** Examine forward short shaft (steel) disc pack couplings for condition and security.		
	4. Examine forward short shaft (steel) splined adapters for adequate lubrication and freedom of movement.		
	5. Torque check forward short shaft disc pack coupling fasteners 50 to 70 inch-pounds (5.7 to 7.9 Nm).		
Chapter 96	**ELECTRICAL**		
	1. Examine all electrical components, wires, cables, and connectors in the power plant area for chafing, general condition, and security.		
	2. Verify illumination of airframe fuel filter caution light, if installed, by depressing differential switch “press to test” button on filter head.		

PROGRESSIVE INSPECTIONS

5-17. 100-HOUR AIRFRAME PROGRESSIVE INSPECTION — EVENT NO. 2 (CONT)

DATA REFERENCE	INSPECTION TASK DESCRIPTION	INITIAL MECH	INITIAL OTHER
	ZONE 5 — AFT TOP DECK		
	PLACARDS AND MARKINGS		
Chapter 11	**1.** Examine the placards, decals, and markings. Ensure they are readable, correctly applied, and in agreement with the applicable configuration of your helicopter.		
	AIRFRAME (AFT TOP DECK)		
Chapter 71	**1.** Remove and examine aft fairing and attachment fasteners for condition and security.		
	2. Examine fairing retainer for condition.		
	3. Examine exterior of aft deck structure for condition.		
	4. After completion of the inspection, make sure to reinstall all the panels, fairings, and cowlings removed during the inspection		
	OIL SYSTEM		
Chapter 79	**1.** Examine oil cooler area for evidence of oil leaks. Examine oil cooler pan for cleanliness and make sure the drain is not blocked.		
	2. Examine all flexible and rigid fluid lines for condition and security.		
	a. Pay particular attention for chafing damage and kinked lines.		
	3. Examine oil cooler core for obstructions and cleanliness.		
Chapter 65	**4.** Examine oil cooler blower and housing for cleanliness, condition, and security.		
Chapter 79	**5.** Examine oil tank for leakage, condition, and security. Check oil for contamination.		
	6. Examine oil tank supports for condition and security.		
Chapter 71	**7.** Examine the seals bonded to the oil cooler for condition and security.		

PROGRESSIVE INSPECTIONS

5-17. 100-HOUR AIRFRAME PROGRESSIVE INSPECTION — EVENT NO. 2 (CONT)

DATA REFERENCE	INSPECTION TASK DESCRIPTION	INITIAL MECH	INITIAL OTHER
	8. Examine external scavenge oil filter system (STC) (if installed) for condition and security.		
	DRIVETRAIN		
Chapter 65	**1.** Examine the oil cooler blower impeller for condition and security.		
	2. Examine oil cooler blower impeller shaft for condition.		
	3. Examine oil cooler blower hanger bearings and brackets for grease leakage and evidence of overheating.		
	4. Examine aft short shaft (aluminium) for condition and security.		
	5. Examine aft short shaft (aluminium) splined adapter for adequate lubrication and freedom of movement.		
	6. Torque check disc pack coupling fasteners 50 to 70 inch-pounds (5.7 to 7.9 Nm).		
Chapter 96	**ELECTRICAL**		
	1. Examine all electrical components, wires, cables, and connectors in the area of the aft deck for chafing, general condition, and security.		
	GROUND RUN		
	CAUTION GROUND RUN OF HELICOPTER TO BE ACCOMPLISHED BY QUALIFIED PERSONNEL ONLY.		
Chapter 12	**1.** Make sure applicable servicing requirements have been carried out.		
	2. Check oil level of transmission, hydraulic tank, engine, and tail rotor gearbox prior to running helicopter.		

PROGRESSIVE INSPECTIONS

5-17. 100-HOUR AIRFRAME PROGRESSIVE INSPECTION — EVENT NO. 2 (CONT)

DATA REFERENCE	INSPECTION TASK DESCRIPTION	INITIAL MECH	INITIAL OTHER
BHT-206A-FM-1, BHT-206B-FM-1, BHT-206B3-FM-1	**3.** Make sure that helicopter is ready for ground run and that surrounding area is clear. **4.** Start the helicopter and conduct ground run at 100% N_R to check for leaks, and ensure all systems are operational, and parameters are within Flight Manual limitations. **5.** Shut down the helicopter.		

PROGRESSIVE INSPECTIONS

5-18. 100-HOUR AIRFRAME PROGRESSIVE INSPECTION — EVENT NO. 3

DATA REFERENCE	INSPECTION TASK DESCRIPTION	INITIAL MECH	INITIAL OTHER
	DATE: _____ **W.O.** _____		
	FACILITY: _____		
	HELICOPTER S/N: _____		
	REGISTRY NO.: _____		
	TOTAL TIME: _____		
	SIGNATURE: _____		
	ZONE 6 — TAILBOOM		
Chapter 11	**PLACARDS AND MARKINGS**		
	1. Examine the placards, decals, and markings. Ensure they are readable, correctly applied, and in agreement with the applicable configuration of your helicopter.		
Chapter 53	**TAILBOOM STRUCTURE**		
	NOTE In the event that cracks are found during inspection of tailboom, contact Product Support Engineering.		
	1. Clean entire tailboom taking particular care to remove all grime and dirt.		
	2. Remove tail rotor driveshaft and gearbox fairings. Inspect for condition and attachment of fasteners.		
Chapter 53	**3.** Examine entire tailboom for cracks, dents, deformation, waviness, working rivets, and chafing between tailboom skin and fairing. Pay particular attention to the left side upper quadrant of the tailboom. Also pay particular attention to the rivets attaching the tail rotor gearbox support to the tailboom.		
BHT-206-SRM	**4.** Replace any loose or working rivets found.		

PROGRESSIVE INSPECTIONS

5-18. 100-HOUR AIRFRAME PROGRESSIVE INSPECTION — EVENT NO. 3 (CONT)

DATA REFERENCE	INSPECTION TASK DESCRIPTION	INITIAL MECH	INITIAL OTHER
	5. Replace removed, damaged, or worn anti-chafing adhesive tape (C-460) as required.		
	6. Examine driveshaft cover retaining clips for condition and security.		
Chapter 53	**7.** Examine horizontal stabilizer for condition and security of attachment. Verify security of all attachment bolts. Make sure the vertical through bolts can be rotated. Inspect the inboard rib for cracks.		
	8. Inspect the vertical fin attachment support for condition and damage. Pay particular attention to the vertical fin attachment points.		
	9. Examine vertical fin assembly for condition and security.		
	10. Torque check vertical fin attachment hardware 75 to 95 inch-pounds (8.47 to 10.75 Nm).		
Chapter 32	**11.** Examine vertical fin tail skid for condition, security, and signs of ground contact.		
	12. Examine for open drains on lower skin of tailboom and clear any obstructions.		
	13. Examine antennas for damage and security.		
	<u>TAIL ROTOR DRIVESHAFTS</u>		
Chapter 65	**1.** Examine tail rotor driveshaft hanger bearings for excessive grease leakage and evidence of overheating.		
	2. Examine hanger bearing support brackets for condition and security.		
	3. Examine long tail rotor driveshaft or segmented driveshafts and aft splined adapter for condition and security. Check aft splined adapter for adequate lubrication and freedom of movement.		
	4. Torque check disc pack coupling fasteners 50 to 70 inch-pounds (5.7 to 7.9 Nm). Apply torque seal after torquing.		

PROGRESSIVE INSPECTIONS

5-18. 100-HOUR AIRFRAME PROGRESSIVE INSPECTION — EVENT NO. 3 (CONT)

DATA REFERENCE	INSPECTION TASK DESCRIPTION	INITIAL MECH	INITIAL OTHER
	TAIL ROTOR GEARBOX		
Chapter 53	**1.** Examine tail rotor gearbox support for condition and security. Pay particular attention for cracks at the gearbox attachment holes.		
Chapter 65	**2.** Examine tail rotor gearbox for oil leaks, condition, and security.		
	3. Examine gearbox oil for evidence of contamination.		
	4. Examine tail rotor output shaft for condition.		
	5. Examine the tail rotor gearbox chip detector for accumulated material.		
Chapter 96	**6.** Perform operational check of the tail rotor gearbox chip detector.		
Chapter 67	**TAIL ROTOR PITCH CHANGE CONTROLS**		
	1. Examine the tail rotor pitch control mechanism for freedom of travel throughout range and for condition and security.		
	2. Examine the following tail rotor pitch change components:		
	a. Boot for condition, security, and evidence of grease or oil leakage.		
	b. Lower control mechanism rod for condition of bearings.		
	c. Pitch links and spherical bearings for condition and security.		
	d. Crosshead for condition and security.		
	e. Knurled nut for condition and security and liner for excessive play.		
Chapter 96	**ELECTRICAL**		
	1. Examine all visible electrical components, wires, cables, and connectors in the area of the tailboom for chafing, general condition, and security.		

PROGRESSIVE INSPECTIONS

5-18. 100-HOUR AIRFRAME PROGRESSIVE INSPECTION — EVENT NO. 3 (CONT)

DATA REFERENCE	INSPECTION TASK DESCRIPTION	INITIAL MECH	INITIAL OTHER
	2. Verify navigation lights and anti-collision light for operation, condition, and security.		
Chapter 97	**3.** Examine antennas for condition and security.		
	GROUND RUN		
	CAUTION GROUND RUN OF HELICOPTER TO BE ACCOMPLISHED BY QUALIFIED PERSONNEL ONLY.		
Chapter 12	**1.** Make sure applicable servicing requirements have been carried out.		
	2. Check oil level of transmission, hydraulic tank, engine, and tail rotor gearbox prior to running helicopter.		
	3. Make sure that helicopter is ready for ground run and that surrounding area is clear.		
BHT-206A-FM-1, BHT-206B-FM-1, BHT-206B3-FM-1	**4.** Start the helicopter and conduct ground run at 100% N_R to check for leaks, and ensure all systems are operational, and parameters are within Flight Manual limitations.		
	5. Shut down the helicopter.		

PROGRESSIVE INSPECTIONS

5-19. 100-HOUR AIRFRAME PROGRESSIVE INSPECTION — EVENT NO. 4

DATA REFERENCE	INSPECTION TASK DESCRIPTION	INITIAL MECH	INITIAL OTHER
	DATE: _____ **W.O.** _____		
	FACILITY: _____		
	HELICOPTER S/N: _____		
	REGISTRY NO.: _____		
	TOTAL TIME: _____		
	SIGNATURE: _____		
	ZONE 7 — CABIN INTERIOR		
Chapter 11	**PLACARDS AND MARKINGS**		
	1. Examine the placards, decals, and markings. Ensure they are readable, correctly applied, and in agreement with the applicable configuration of your helicopter.		
BHT-206A-FM-1, BHT-206B-FM-1, BHT-206B3-FM-1	**INSTRUMENTS**		
	1. Examine instruments and instrument panel for condition, security, and for correct markings.		
	EQUIPMENT AND FURNISHINGS		
Chapter 53	**1.** Examine the cabin floor for condition.		
Chapter 25	**2.** Examine the seat assemblies for condition and security.		
IL GEN-05-103	**3.** Examine passenger and crew restraints and webbing for condition and security.		
	4. Verify operation of passenger and crew inertia reels and belt buckles. Pull promptly on each reel to confirm the proper activation of the reel locking mechanism.		
	5. Examine the interior trim for condition and security.		

PROGRESSIVE INSPECTIONS

5-19. 100-HOUR AIRFRAME PROGRESSIVE INSPECTION — EVENT NO. 4 (CONT)

DATA REFERENCE	INSPECTION TASK DESCRIPTION	INITIAL MECH	INITIAL OTHER
Chapter 52	**6.** Verify sliding windows for safety and smoothness of sliding.		
Chapter 21	**7.** Examine the ventilation system for condition and security.		
	8. Verify nose vents for proper operation, absence of obstructions or debris, and open drains.		
Chapter 95	**9.** Verify for proper operation of the fuel valve switch guard.		
Chapter 26	**10.** Inspect cabin fire extinguisher for condition, security, and proper charge.		
Chapter 21	**11.** Verify proper operation of ventilation inlet control cables.		
	12. Examine first aid kit, replace missing or out of date items.		
Chapter 67	**CONTROLS**		
	1. Examine the collective control stick for condition and security. Examine copilot collective control stick, if installed.		
	2. Examine the cyclic control stick for condition and security. Examine copilot cyclic control stick, if installed.		
	3. Examine the anti-torque control pedals for condition and security. Examine copilot anti-torque control pedals, if installed.		
Chapter 96	**ELECTRICAL**		
	1. Verify operation of cockpit map reading light.		
	2. Verify operation of aft cabin reading lights, if installed.		
	CAUTION USE EXTREME CARE WHEN IN PROXIMITY OF PITOT TUBE WITH HEAT APPLIED. TOUCHING TUBE MAY RESULT IN SERIOUS BURNS.		
	3. Verify operation of the pitot tube heating system.		

PROGRESSIVE INSPECTIONS

5-19. 100-HOUR AIRFRAME PROGRESSIVE INSPECTION — EVENT NO. 4 (CONT)

DATA REFERENCE	INSPECTION TASK DESCRIPTION	INITIAL MECH	INITIAL OTHER
	4. Verify operation of defog blowers.		
	5. Verify operation of ENGINE OUT and LOW ROTOR RPM audio and mute switch, if installed.		
	6. Verify illumination of all caution panel annunciator light segments by depressing test switch, or each individual light segment, as applicable.		
	7. Verify instrument lighting and dimming capabilities.		
	ZONE 8 — FORWARD FUSELAGE		
	PLACARDS AND MARKINGS		
Chapter 11	**1.** Examine the placards, decals, and markings. Ensure they are readable, correctly applied, and in agreement with the applicable configuration of your helicopter.		
	FUSELAGE		
Chapter 53	**1.** Examine forward fuselage for condition.		
Chapter 52	**2.** Examine all cabin doors for condition and security. Give special attention to the following:		
	a. Hinges		
	b. Seals		
	c. Latches for proper adjustment, positive locking, and wear		
	d. Windows		
	e. Handles		
Chapter 95	**3.** Drain moisture from pitot and static piping installation.		
BHT-206-SI-68	**4.** Examine removable litter door post for condition and security, if installed. Examine the door post handle for proper operation.		

PROGRESSIVE INSPECTIONS

5-19. 100-HOUR AIRFRAME PROGRESSIVE INSPECTION — EVENT NO. 4 (CONT)

DATA REFERENCE	INSPECTION TASK DESCRIPTION	INITIAL MECH	INITIAL OTHER
Chapter 53	**5.** Examine the external power door and receptacle for condition and security.		
	6. Examine battery compartment door, door seal, and attachment for condition and security.		
Chapter 8 and Chapter 96	**7.** Examine components in battery compartment for condition and security.		
Chapter 32	**8.** Examine cabin entry steps for condition and security, if installed.		
Chapter 52	**9.** Examine windshields and skylights for condition.		
Chapter 53	**10.** Examine upper fuselage for evidence of water leaks.		
	11. Examine lower fuselage for indication of fuel leaks, dents, cracks, corrosion, delamination, loose or missing rivets, and condition.		
	12. Examine all fuselage sealant joints for condition. Restore sealant as necessary.		
Chapter 96 and Chapter 97	**ELECTRICAL AND AVIONICS**		
	1. Examine all visible electrical components, wires, cables, and connectors in the area of the forward fuselage for chafing, general condition, and security.		
	2. Examine battery and vent tubes for condition and security.		
	3. Perform operational check of the battery temperature sensing system.		
	4. Verify operation of litter door open warning light.		
	5. Verify operation of landing lights.		
	6. Verify operation of lower fuselage mounted position lights, if installed.		
	7. Examine antennas for condition and security.		

PROGRESSIVE INSPECTIONS

5-19. 100-HOUR AIRFRAME PROGRESSIVE INSPECTION — EVENT NO. 4 (CONT)

DATA REFERENCE	INSPECTION TASK DESCRIPTION	INITIAL MECH	INITIAL OTHER
	ZONE 9 — AFT FUSELAGE		
	PLACARDS AND MARKINGS		
Chapter 11	**1.** Examine the placards, decals, and markings. Make sure they are readable, correctly applied, and in agreement with the applicable configuration of your helicopter.		
	FUSELAGE (EXTERIOR)		
Chapter 53	**1.** Examine aft fuselage for dents, cracks, corrosion, delamination, loose or missing rivets, and condition.		
	2. Examine aft fuselage for indications of fuel or oil leaks.		
Chapter 28	**3.** Examine the fuel cap for condition and security.		
Chapter 96	**4.** Examine the grounding plug for condition.		
Chapter 6 and Chapter 53	**5.** Examine all fuselage drains for condition and freedom from obstructions.		
Applicable Service Instruction	**6.** Examine heater and/or air conditioning inlets and outlets for cleanliness and absence of obstructions, if installed.		
Chapter 53	**7.** Examine baggage compartment door, seal, and latches for operation, condition, and security.		
	8. Examine aft crosstube support tunnel structure for cracks, corrosion, distortion, and loose fasteners.		
Chapter 96	**9.** Verify operation of the baggage door ajar caution light, if installed.		
	FUSELAGE (INTERIOR)		
Chapter 53	**1.** Examine baggage compartment for condition.		
	2. Gain access to inside of aft fuselage through access panels in baggage compartment and access panel located on the aft right side fuselage:		
	a. Examine access panels and fasteners for condition.		

PROGRESSIVE INSPECTIONS

5-19. 100-HOUR AIRFRAME PROGRESSIVE INSPECTION — EVENT NO. 4 (CONT)

DATA REFERENCE	INSPECTION TASK DESCRIPTION	INITIAL MECH	INITIAL OTHER
	b. Examine under engine pan for fuel, oil, or water leaks.		
	c. Examine drain lines for condition and security.		
	d. Examine aft fuselage longerons for cracks, corrosion, and condition. Pay particular attention to the upper left longeron between aft fuselage frame at STA 179.92 and fuselage frame at STA 206.76.		
	e. Examine interface between longerons and engine pan structure for cracks, corrosion, distortion, and loose fasteners.		
	f. Inspect engine mount attachment structure for condition.		
	CAUTION ANY CRACK, CORROSION, OR LOOSE OR SHEARED RIVET IS CAUSE FOR IMMEDIATE GROUNDING OF THE HELICOPTER UNTIL THE PROBLEM IS CORRECTED.		
Chapter 53	**g.** Examine the four tailboom attachment fittings on fuselage aft bulkhead and tailboom forward bulkhead for cracks. Give special attention to the tailboom attachment fittings/ intercostals and bolts, and to fasteners between the intercostals. Particular attention must be given to inspection of the upper left fitting.		
	CONTROLS		
Chapter 27	**1.** Examine the anti-torque control system components for condition and security.		
Chapter 96 and Chapter 97	**ELECTRICAL AND AVIONICS**		
	1. Examine antennas for condition and security.		
	2. Examine all components, electrical wiring, cables, and connectors for chafing, general condition, and security.		

PROGRESSIVE INSPECTIONS

5-19. 100-HOUR AIRFRAME PROGRESSIVE INSPECTION — EVENT NO. 4 (CONT)

DATA REFERENCE	INSPECTION TASK DESCRIPTION	INITIAL MECH	INITIAL OTHER
	3. Examine all optional equipment installed in the aft fuselage area for condition and security.		
	4. Verify proper operation of fuel sump drain valve switch.		
	ZONE 10 — LANDING GEAR		
Chapter 11	**PLACARDS AND MARKINGS**		
	1. Examine the placards, decals, and markings. Ensure they are readable, correctly applied, and in agreement with the applicable configuration of your helicopter.		
Chapter 32	**CROSSTUBES**		
	1. Examine crosstube retaining straps, cushions, and attaching hardware for condition and security.		
	2. Examine fuselage attachment fittings for condition and security.		
	3. Examine electrical bonding strips for condition and security, if installed.		
	4. Examine fairings for condition and security, if installed		
	5. Examine crosstube riveted or clamped supports for condition and security. Give particular attention to the sealant joints around supports. Restore sealant (C-251) and paint finish as required.		
	6. Examine crosstubes for corrosion and damage. Give particular attention to areas where equipment is mounted. Repair and/or restore surface protection as required.		
	7. Examine cabin entry steps for condition and security, if installed.		
	8. Examine sealant joint at junction with skid tube saddles. Restore sealant (C-251) and paint finish as required.		
Chapter 32	**SKID TUBES**		
	1. Examine skid tubes for corrosion, damage, and security.		

PROGRESSIVE INSPECTIONS

5-19. 100-HOUR AIRFRAME PROGRESSIVE INSPECTION — EVENT NO. 4 (CONT)

DATA REFERENCE	INSPECTION TASK DESCRIPTION	INITIAL MECH	INITIAL OTHER
	2. Examine skid shoes for condition and security.		
	3. Examine skid tube saddles for corrosion, damage, and security.		
	4. Examine ground handling wheel attachment bolts for condition and security.		
	GROUND RUN		
	CAUTION GROUND RUN OF HELICOPTER TO BE ACCOMPLISHED BY QUALIFIED PERSONNEL ONLY.		
Chapter 12	**1.** Make sure applicable servicing requirements have been carried out.		
	2. Check oil level of transmission, hydraulic tank, engine, and tail rotor gearbox prior to running helicopter.		
	3. Make sure that helicopter is ready for ground run and that surrounding area is clear.		
BHT-206A-FM-1, BHT-206B-FM-1, BHT-206B3-FM-1	**4.** Start the helicopter and conduct ground run at 100% N_R to check for leaks, and ensure all systems are operational, and parameters are within Flight Manual limitations.		
Chapter 96	**5.** Check the voltage regulator setting. Adjust as required.		
	6. Shut down the helicopter.		

PERIODIC INSPECTION

5-20. 100-HOUR AIRFRAME PERIODIC INSPECTION

DATA REFERENCE	INSPECTION TASK DESCRIPTION	INITIAL MUCH	INITIAL OTHER
Paragraph 5-16 through paragraph 5-19	**DATE:** _____ **W.O.** _____ **FACILITY:** _____ **HELICOPTER S/N:** _____ **REGISTRY NO.:** _____ **TOTAL TIME:** _____ **SIGNATURE:** _____ **1.** Do this inspection every 100 hours of operation or every 12 calendar months. **2.** Do all four events of the 100-hour progressive inspection.		

PROGRESSIVE INSPECTIONS

5-21. 300-HOUR AIRFRAME PROGRESSIVE INSPECTION — EVENT NO. 1

DATA REFERENCE	INSPECTION TASK DESCRIPTION	INITIAL MECH	INITIAL OTHER
	DATE: _____ W.O. _____ **FACILITY: _____** **HELICOPTER S/N: _____** **REGISTRY NO.: _____** **TOTAL TIME: _____** **SIGNATURE: _____**		
	ZONE 1 — MAIN ROTOR SYSTEM		
Chapter 11	**PLACARDS AND MARKINGS**		
	1. Examine the placards, decals, and markings. Make sure they are readable, correctly applied, and in agreement with the applicable configuration of your helicopter.		
Chapter 62	**MAIN ROTOR SYSTEM**		
	1. Verify main rotor flap restraint for freedom of movement, condition, and security.		
	2. Examine static stops and mast for evidence of mast bumping.		
	3. Remove main rotor blade leading edge erosion protection tape, if installed.		
	4. Examine main rotor blades for cleanliness and overall condition. Examine for cracks, corrosion, and de-bonding of doublers.		
	5. Examine leading edge of blades for corrosion and erosion. Restore contour as necessary.		
	6. Examine the tip weight cap for corrosion, cracks, erosion, and deformation.		

PROGRESSIVE INSPECTIONS

5-21. 300-HOUR AIRFRAME PROGRESSIVE INSPECTION — EVENT NO. 1 (CONT)

DATA REFERENCE	INSPECTION TASK DESCRIPTION	INITIAL MECH	INITIAL OTHER
BHT-206A/B/L-Series-CR&O, Chapter 62	**7.** If applicable, reinstall main rotor blade leading edge erosion protection tape. **8.** Examine the following main rotor hub assembly components for condition and security: **a.** Mast nut **b.** Trunnion **c.** Pillow blocks **d.** Grips **e.** Pitch horns **f.** Static stops **9.** Examine pitch horn trunnion bearings for evidence of wear, damage, and security. **10.** Examine main rotor yoke for corrosion or mechanical damage as follows: **a.** Examine fillet radius of both yoke spindles inboard of wear sleeves for evidence of corrosion. If corrosion is visible, remove with fine abrasive pad (C-407). If corrosion cannot be removed with pads, or is extensive, disassemble hub for inspection and repair. **NOTE** If the main rotor hub must be disassembled, omit remaining steps. **b.** Examine entire yoke centre section (inboard and outboard surfaces) for damage. **c.** Touch up all repaired areas or areas of bare metal in accordance with applicable main rotor hub inspection and repair instructions.		

PROGRESSIVE INSPECTIONS

5-21. 300-HOUR AIRFRAME PROGRESSIVE INSPECTION — EVENT NO. 1 (CONT)

DATA REFERENCE	INSPECTION TASK DESCRIPTION	INITIAL MECH	INITIAL OTHER
	d. Ensure no sealant voids are visible around shields (up to and including hub assembly 206-011-100-021) or wear sleeve, strap fittings, and grip closure. Recoat with sealant (C-308) as required.		
	ZONE 2 — TAIL ROTOR ASSEMBLY		
Chapter 11	**PLACARDS AND MARKINGS**		
	1. Examine the placards, decals, and markings. Make sure they are readable, correctly applied, and in agreement with the applicable configuration of your helicopter.		
Chapter 64	**TAIL ROTOR ASSEMBLY**		
	1. Clean tail rotor blades to maintain visibility of warning stripes.		
BHT-206A/B/L-Series-CR&O, Chapter 64	**2.** Examine the following tail rotor hub assembly components for condition and security of attachment:		
	a. Yoke		
	b. Pitch horns		
	c. Trunnion and trunnion caps		
	d. Counterweight hardware		
Chapter 64	**3.** Examine tail rotor blades as follows:		
	a. Tip block rivets for damage, corrosion, erosion, and looseness.		
	b. Skin for bulges, nicks, dents, scratches, or other damage.		
	c. Deformed or cracked skin in the area of the chordwise weights.		
	d. Leading edge for erosion, nicks, dents, or scratches.		

PROGRESSIVE INSPECTIONS

5-21. 300-HOUR AIRFRAME PROGRESSIVE INSPECTION — EVENT NO. 1 (CONT)

DATA REFERENCE	INSPECTION TASK DESCRIPTION	INITIAL MECH	INITIAL OTHER
	e. Bonded joints of blade skin mating area for suspected voids or cracks. Pay particular attention in the area of tip block and doublers.		
	f. Feathering bearings for looseness and cracks in uniball.		
	4. Examine the following tail rotor hub and blade assembly attaching components for condition and security:		
	a. Spacer		
	b. Rubber bumper		
	c. Static stop		
	d. Nut		
	e. Balance wheel		
	GROUND RUN		
	CAUTION GROUND RUN OF HELICOPTER TO BE ACCOMPLISHED BY QUALIFIED PERSONNEL ONLY.		
Chapter 12	**1.** Make sure applicable servicing requirements have been carried out.		
	2. Check oil level of transmission, hydraulic tank, engine, and tail rotor gearbox prior to running helicopter.		
	3. Make sure that helicopter is ready for ground run and that surrounding area is clear.		
BHT-206A-FM-1, BHT-206B-FM-1, BHT-206B3-FM-1	**4.** Start the helicopter and conduct ground run at 100% N_R to check for leaks, and ensure all systems are operational, and parameters are within Flight Manual limitations.		
Chapter 18	**5.** Check dynamic balance of tail rotor hub and blade assembly and adjust as required.		

PROGRESSIVE INSPECTIONS

5-21. 300-HOUR AIRFRAME PROGRESSIVE INSPECTION — EVENT NO. 1 (CONT)

DATA REFERENCE	INSPECTION TASK DESCRIPTION	INITIAL MECH	INITIAL OTHER
	6. Shut down the helicopter.		

PROGRESSIVE INSPECTIONS

5-22. 300-HOUR AIRFRAME PROGRESSIVE INSPECTION — EVENT NO. 2

DATA REFERENCE	INSPECTION TASK DESCRIPTION	INITIAL MECH	INITIAL OTHER
	DATE: _____ **W.O.** _____		
	FACILITY: _____		
	HELICOPTER S/N: _____		
	REGISTRY NO.: _____		
	TOTAL TIME: _____		
	SIGNATURE: _____		
	ZONE 3 — FORWARD DECK		
Chapter 11	**PLACARDS AND MARKINGS**		
	1. Examine the placards, decals, and markings. Make sure they are readable, correctly applied, and in agreement with the applicable configuration of your helicopter.		
	AIRFRAME (FORWARD DECK)		
Chapter 71	**1.** Remove and examine forward fairing for condition and security.		
	2. Examine all fairing and cowling latches and/or fasteners for condition		
	3. Examine top deck for condition, leaks, and security.		
	4. Clean transmission deck.		
	5. Examine air induction cowling for condition and security, and plenum for damage, obstructions, and cleanliness. Examine intake fairing windows for damage and cleanliness.		
	6. Examine inlet screen for missing or damaged wires and rivets, if applicable.		

PROGRESSIVE INSPECTIONS

5-22. 300-HOUR AIRFRAME PROGRESSIVE INSPECTION — EVENT NO. 2 (CONT)

DATA REFERENCE	INSPECTION TASK DESCRIPTION	INITIAL MECH	INITIAL OTHER
	7. Examine particle separator, if installed, vortex tubes, ejector tubes, and ejector nozzles for cleanliness, condition, and security.		
	8. Examine forward deck drains to ensure absence of obstruction.		
	9. Examine antennas for condition and security.		
	10. After completion of the inspection, make sure to reinstall all the panels, fairings, and cowlings removed during the inspection.		
Chapter 67	**CONTROLS**		
	1. Examine the following flight control components for signs of interference, corrosion, wear, mechanical damage, and security:		
	a. Control tubes		
	b. Links		
	c. Rod and bearings		
	d. Bellcranks		
	e. Bellcrank supports		
	f. Attaching bolts and nuts		
	2. Inspect main rotor pitch links with a 3X magnifying glass for damage, corrosion, and cracks. Give particular attention to swaged ends at jam nut or inserts.		
Chapter 76	**3.** Examine N_2 control linkages on forward deck for condition and security. Pay particular attention to the jackshaft assembly for damage or evidence of twisting.		
	4. Verify all control tubes and bellcranks for freedom of travel throughout range.		
Chapter 62 and Chapter 63	**SWASHPLATE ASSEMBLY AND MAST**		
	1. Clean swashplate assembly and mast.		

PROGRESSIVE INSPECTIONS

5-22. 300-HOUR AIRFRAME PROGRESSIVE INSPECTION — EVENT NO. 2 (CONT)

DATA REFERENCE	INSPECTION TASK DESCRIPTION	INITIAL MECH	INITIAL OTHER
	2. Disconnect main rotor pitch links from outer ring. **3.** Examine swashplate drive assembly for axial, radial, and accumulative wear. **4.** Examine idler (drive) link for mechanical damage and corrosion damage. Disconnect idler (drive) link from outer ring. **5.** Disconnect boot from swashplate outer ring and lift up temporarily. Examine boot for evidence of deterioration. **6.** Verify condition of duplex bearing, before lubrication, as follows: **a.** Rotate outer ring to check duplex bearing for condition. Bearing must be smooth and show no evidence of roughness, binding, dragging, or looseness. **7.** Examine pivot sleeve slot sidewalls for wear or deterioration. **8.** Examine pivot sleeve bearings for wear, deterioration, and evidence of excessive axial play between pivot sleeve and swashplate support. **9.** Examine collar set bushings for cracks and damage. **10.** Examine swashplate support and uniball surfaces for mechanical damage and corrosion damage. **11.** Examine collective lever for mechanical damage and corrosion damage. Examine collective lever to sleeve assembly pins for condition. **12.** Examine inner ring for condition. Examine for evidence of contact with sleeve assembly. **13.** Examine outer ring for condition. **14.** Examine the upper inside diameter of swashplate support for evidence of contact with the mast pole. **15.** Verify and adjust swashplate tilt friction as required.		

PROGRESSIVE INSPECTIONS

5-22. 300-HOUR AIRFRAME PROGRESSIVE INSPECTION — EVENT NO. 2 (CONT)

DATA REFERENCE	INSPECTION TASK DESCRIPTION	INITIAL MECH	INITIAL OTHER
	a. Value must be between 15 to 32 pounds (67 to 142 N). If out of limits, adjust to 15 to 32 pounds (67 to 142 N) and check again.		
	16. Connect and secure boot, idler (drive) link, and main rotor pitch links to outer ring.		
	17. Examine swashplate assembly for condition and security.		
Chapter 63	**18.** Examine mast for condition and security.		
Chapter 62 and Chapter 63	**19.** Ensure no sealant voids are visible around the swashplate drive collar set. Recoat with adhesive (C-307) as required.		
Chapter 29	**HYDRAULIC SYSTEM**		
	1. Examine rigid and flexible fluid lines for chafing, leaks, and security.		
	2. Examine hydraulic pump for leaks and general condition.		
	3. Examine hydraulic reservoir for leaks and general condition.		
	4. Examine hydraulic pump splines, transmission oil pump splines, and rotor tachometer and adapter splines for condition and security.		
Chapter 12	**5.** Lubricate hydraulic pump driveshaft splines, oil pump splines, and rotor tachometer splines.		
	6. Examine servo actuator support for condition and security.		
	7. Examine servo actuators for leaks, condition, and security.		
	8. Verify linkage pivot bolts on hydraulic servo actuators for freedom of rotation and security.		
Chapter 29	**9.** Examine hydraulic filter red indicator button. Button should not be extended.		
Chapter 12	**10.** Verify fluid level in hydraulic reservoir. Replenish as required. Replace fluid if color has changed or if fluid emits bad odor.		

PROGRESSIVE INSPECTIONS

5-22. 300-HOUR AIRFRAME PROGRESSIVE INSPECTION — EVENT NO. 2 (CONT)

DATA REFERENCE	INSPECTION TASK DESCRIPTION	INITIAL MECH	INITIAL OTHER
	11. Examine relief valve and solenoid valve for leaks, condition, and security.		
Chapter 63	**TRANSMISSION AND PYLON ASSEMBLY**		
	1. Examine the following pylon support components for condition and security:		
	a. Pylon support link assemblies and bearing for damage and deterioration.		
	b. Forward and aft deck fittings and surrounding structure.		
	c. Deck fitting spherical bearings.		
	d. Drag pin and bearing for damage and deterioration.		
	e. Static stop plate on deck for condition and sheared rivets.		
	f. Isolation mount for evidence of main driveshaft contact and general condition and security.		
	g. All pylon support hardware for security of attachment.		
	2. Examine transmission assembly for condition and security.		
	3. Examine transmission oil cooler for condition, security, and obstructions to air flow.		
	4. Examine transmission oil cooler air duct for condition, security, and obstructions to air flow. Give special attention to chafing damage.		
	5. Examine transmission assembly for evidence of oil leakage.		
	6. Examine all fluid lines for chafing, damage, and evidence of leakage.		
	7. Examine transmission oil for evidence of contamination.		
	8. Inspect all transmission chip detectors, including mast bearing chip detector, if installed, for accumulated material.		

PROGRESSIVE INSPECTIONS

5-22. 300-HOUR AIRFRAME PROGRESSIVE INSPECTION — EVENT NO. 2 (CONT)

DATA REFERENCE	INSPECTION TASK DESCRIPTION	INITIAL MECH	INITIAL OTHER
Chapter 96	**9.** Perform operational check of all transmission chip detectors. **10.** Ensure no sealant voids are visible around deck mounted supports, fittings, and isolation mount. Reapply sealant (C-308) as required.		
Chapter 63	**MAIN DRIVESHAFT** **1.** Examine main driveshaft as follows: **a.** Examine main driveshaft for visual damage and couplings for grease leakage. **b.** Check driveshaft for freedom and smoothness of axial movement. **c.** Examine main driveshaft attachment bolts for security. **NOTE** TEMP-PLATE indicator dots are of a white or gray color that turn black when exposed to an overtemperature condition. Chemical contamination can also cause the indicating dots to turn black. **d.** Inspect TEMP-PLATES for evidence of overheating indication, deterioration, debonding, or excessive discoloration of the epoxy overcoating.		
Chapter 96	**ELECTRICAL** **1.** Examine all electrical components, wires, cables, and connectors in the area of the forward deck and transmission for chafing, general condition, and security.		

PROGRESSIVE INSPECTIONS

5-22. 300-HOUR AIRFRAME PROGRESSIVE INSPECTION — EVENT NO. 2 (CONT)

DATA REFERENCE	INSPECTION TASK DESCRIPTION	INITIAL MECH	INITIAL OTHER
	GROUND RUN		
	CAUTION GROUND RUN OF HELICOPTER TO BE ACCOMPLISHED BY QUALIFIED PERSONNEL ONLY.		
Chapter 12	**1.** Make sure applicable servicing requirements have been carried out.		
	2. Check oil level of transmission, hydraulic tank, engine, and tail rotor gearbox prior to running helicopter.		
	3. Make sure that helicopter is ready for ground run and that surrounding area is clear.		
BHT-206A-FM-1, BHT-206B-FM-1, BHT-206B3-FM-1	**4.** Start the helicopter and conduct ground run at 100% N_R to check for leaks, and ensure all systems are operational, and parameters are within Flight Manual limitations.		
	5. Shut down the helicopter.		

PROGRESSIVE INSPECTIONS

5-23. 300-HOUR AIRFRAME PROGRESSIVE INSPECTION — EVENT NO. 3

DATA REFERENCE	INSPECTION TASK DESCRIPTION	INITIAL MECH	INITIAL OTHER
	DATE: _____ **W.O.** _____		
	FACILITY: _____		
	HELICOPTER S/N: _____		
	REGISTRY NO.: _____		
	TOTAL TIME: _____		
	SIGNATURE: _____		
	ZONE 4 — POWER PLANT		
Chapter 11	**PLACARDS AND MARKINGS**		
	1. Examine the placards, decals, and markings. Ensure they are readable, correctly applied, and in agreement with the applicable configuration of your helicopter.		
	AIRFRAME (POWER PLANT AREA)		
Chapter 71	**1.** Examine firewalls for condition and security.		
	2. Examine engine cowlings and doors for condition and security. Using a bright light and mirror, inspect exposed upper and lower edges of the joints between aluminum longerons and titanium engine pan. Edge of sealant coating should be visible. No indications of corrosion or cracks are acceptable.		
	3. Examine engine pan area for evidence of loose fasteners and damage. Restore cracked or missing sealant form engine pan.		
	4. Examine engine pan drains. Make sure that they are not clogged.		
Chapter 28	**5.** Examine airframe fuel filter assembly for evidence of leakage and security, if installed.		

PROGRESSIVE INSPECTIONS

5-23. 300-HOUR AIRFRAME PROGRESSIVE INSPECTION — EVENT NO. 3 (CONT)

DATA REFERENCE	INSPECTION TASK DESCRIPTION	INITIAL MECH	INITIAL OTHER
Chapter 71	**6.** Examine engine mount legs for condition and security. Pay particular attention for loose fasteners. On helicopters with clamshell acoustic mounts, pay particular attention for correct sealing and for signs of corrosion on engine leg tubes.		
	7. Examine engine mount fittings for condition and security.		
Applicable Service Instruction	**8.** Examine rotor brake for condition and security, if installed.		
Chapter 96	**9.** Examine the primary electrical ground connection in engine pan area for condition and security.		
	POWER PLANT		
Rolls-Royce 250 Series Operation and Maintenance Manual, 5W2 or 10W2	**1.** Perform engine inspection per the applicable Rolls-Royce Operation and Maintenance Manual.		
Chapter 71	**2.** Examine engine inlet bellmouth for obstruction and general condition.		
	3. Examine engine compartment hardware for security of attachment.		
	4. Examine engine for evidence of fuel or oil leaks.		
	5. Examine all flexible and rigid lines for condition and security.		
	a. Pay particular attention for chafing damage and kinked lines.		
	6. Examine exhaust stacks and clamps for condition and security.		
	7. Examine all engine-mounted accessories for condition and security.		
Chapter 76	**8.** Examine the engine anti-ice actuator and mechanism for condition and security.		

PROGRESSIVE INSPECTIONS

5-23. 300-HOUR AIRFRAME PROGRESSIVE INSPECTION — EVENT NO. 3 (CONT)

DATA REFERENCE	INSPECTION TASK DESCRIPTION	INITIAL MECH	INITIAL OTHER
Chapter 76	**9.** Examine fuel control lever bolt hole and bolt for wear. Replace parts as required.		
	10. DELETED		
	11. DELETED		
Chapter 95	**12.** Do an operational check of turbine outlet temperature system.		
Chapter 76	**13.** Examine engine controls for condition and security.		
	14. Make sure of operation of engine N_1 control as follows:		
	a. Make sure of correct throttle friction.		
	b. Examine freedom of full throttle grip travel and idle release operation. Bring back to closed position. Examine copilot throttle, if installed.		
	c. Make sure of fuel control stop lever contact with minimum and maximum stops before throttle grip gets to travel limit.		
	NOTE If dual controls are installed, it is permitted for pointer to be 0.078 inch (1.98 mm) below 30° mark when copilot twist grip is used.		
	d. Turn pilot throttle grip to idle detent. Fuel control pointer must be no more than 0.078 inch (1.98 mm) below the 30° mark on the quadrant. Do again for copilot throttle grip, if installed.		
	e. Examine control linkage for too much looseness, lost motion, and binding.		
	15. Make sure of operation of engine N_2 control as follows:		
	a. Put N_2 governor actuator to full DECREASE (extended).		
	b. Lift collective stick full up.		

PROGRESSIVE INSPECTIONS

5-23. 300-HOUR AIRFRAME PROGRESSIVE INSPECTION — EVENT NO. 3 (CONT)

DATA REFERENCE	INSPECTION TASK DESCRIPTION	INITIAL MECH	INITIAL OTHER
	c. Position N_2 governor actuator to full INCREASE (retracted).		
	d. Verify for clearance between governor stop and lever stop arm.		
	e. Lower collective stick full down.		
	f. Position N_2 governor actuator to full DECREASE (extended).		
	g. Verify for clearance between governor stop and lever stop arm.		
Chapter 71	**h.** Verify control linkage for excessive looseness, lost motion, and binding.		
	i. Remove the starter generator and examine the bearings for smooth rotation. Examine the splines on the starter generator driveshaft and the mating splines on the engine gear shaft for wear. If dry spline starter generator installed, clean splines and lubricate.		
Chapter 71 and Chapter 12	**16.** Examine N_1 and N_2 tachometer generator shaft splines and gearbox adapter splines for condition. Clean and lubricate shaft splines.		
	FUEL SYSTEM		
	AIRFRAME FUEL FILTER		
Chapter 28	**1.** Replace airframe fuel filter element, kit KD651511, element 52-01103-1, or element 7582301, as applicable.		
	a. Inspect filter head as follows:		
	b. Remove outlet port fitting from filter head. Using a 0.020 inch (0.508 mm) wire, pass wire through bleed hole in outlet port side of filter head to ensure that hole is unobstructed (applicable to fuel filter assemblies 306001, 306005, 222-366-621-001, -003, and -101, 52-2889-016, and 52-2889-016A).		

PROGRESSIVE INSPECTIONS

5-23. 300-HOUR AIRFRAME PROGRESSIVE INSPECTION — EVENT NO. 3 (CONT)

DATA REFERENCE	INSPECTION TASK DESCRIPTION	INITIAL MECH	INITIAL OTHER
	c. Purge airframe fuel filter and engine fuel system.		
Chapter 28 Rolls-Royce 250 Series Operation and Maintenance Manual 5W2 or 10W2	**NOTE** When purging airframe fuel filter and the engine fuel system of air, ensure that both fuel boost pumps are ON and motor engine for approximately 15 seconds or until there is no evidence of air coming from fuel supply hose. In addition, depress the airframe fuel filter bypass indicator button during the motoring operation to remove air more rapidly.		
	2. Purge the engine fuel system per the Rolls-Royce engine fuel system purging procedure.		
BHT-206A-FM-1, BHT-206B-FM-1, BHT-206B3-FM-1	**3.** During ground run, operate helicopter at 100% N_2 for minimum of 2 minutes to ensure remaining air is purged from fuel filter head and to check for fuel leaks.		
Chapter 28	**FUEL PUMP**		
	NOTE This inspection is only applicable to helicopters S/N 4 through 3566 prior to incorporation of TB 206-82-75.		
	1. Check engine driven fuel pump filter impending bypass function as follows:		
	a. Disconnect the fuel hose from forward end of differential pressure switch and plug the hose.		
	b. Turn ON both fuel boost pumps and verify if engine FUEL FILTER caution light illuminates.		
	c. If the engine FUEL FILTER caution light illuminates, turn OFF both fuel boost pumps. Remove the plug and reconnect the fuel hose removed in step a.		
	d. If the engine FUEL FILTER caution light does not illuminate, troubleshoot and correct impending bypass caution system.		

PROGRESSIVE INSPECTIONS

5-23. 300-HOUR AIRFRAME PROGRESSIVE INSPECTION — EVENT NO. 3 (CONT)

DATA REFERENCE	INSPECTION TASK DESCRIPTION	INITIAL MECH	INITIAL OTHER
	STARTER GENERATOR		
Chapter 71	**1.** Remove starter generator. Examine mounting pad and clamp for condition.		
Chapter 96	**2.** Examine commutator for wear. Replace starter generator if not smooth and bright or if showing excessive wear.		
	3. Inspect brushes for wear.		
Chapter 71	**4.** Examine cooling duct and retention clamp for condition and security.		
	5. Examine the splines on starter generator shaft and engine gear shaft. If dry spline starter generator installed, clean splines and lubricate.		
	DRIVETRAIN		
Chapter 63	**1.** Examine freewheel assembly for condition leaks and security.		
Chapter 63	**2.** Examine the freewheel unit chip detector for accumulated material.		
Chapter 63	**3.** Examine forward short shaft (steel) disc pack couplings for condition and security.		
	4. Examine forward short shaft (steel) splined adapters for wear.		
Chapter 12	**5.** Lubricate forward short shaft (steel) splined adapters.		
Chapter 63	**6.** Torque check forward short shaft disc pack coupling fasteners 50 to 70 inch-pounds (5.7 to 7.9 Nm).		
Chapter 96	**ELECTRICAL**		
	1. Examine all electrical components, wires, cables, and connectors in the power plant area for chafing, general condition, and security.		

PROGRESSIVE INSPECTIONS

5-23. 300-HOUR AIRFRAME PROGRESSIVE INSPECTION — EVENT NO. 3 (CONT)

DATA REFERENCE	INSPECTION TASK DESCRIPTION	INITIAL MECH	INITIAL OTHER
	2. Verify illumination of airframe fuel filter caution light by depressing differential switch “press to test” button on filter head.		
	GROUND RUN		
	CAUTION GROUND RUN OF HELICOPTER TO BE ACCOMPLISHED BY QUALIFIED PERSONNEL ONLY.		
Chapter 12	**1.** Make sure applicable servicing requirements have been carried out.		
	2. Check oil level of transmission, hydraulic tank, engine, and tail rotor gearbox prior to running helicopter.		
	3. Make sure that helicopter is ready for ground run and that surrounding area is clear.		
BHT-206A-FM-1, BHT-206B-FM-1, BHT-206B3-FM-1	**4.** Start the helicopter and conduct ground run at 100% N_R for a minimum of 2 minutes to check for leaks, and ensure all systems are operational, and parameters are within Flight Manual limitations.		
	5. Shut down the helicopter.		

PROGRESSIVE INSPECTIONS

5-24. 300-HOUR AIRFRAME PROGRESSIVE INSPECTION — EVENT NO. 4

DATA REFERENCE	INSPECTION TASK DESCRIPTION	INITIAL MECH	INITIAL OTHER
	DATE: _____ **W.O.** _____		
	FACILITY: _____		
	HELICOPTER S/N: _____		
	REGISTRY NO.: _____		
	TOTAL TIME: _____		
	SIGNATURE: _____		
	ZONE 5 — AFT TOP DECK		
	PLACARDS AND MARKINGS		
Chapter 11	**1.** Examine the placards, decals, and markings. Ensure they are readable, correctly applied, and in agreement with the applicable configuration of your helicopter.		
	AIRFRAME (AFT TOP DECK)		
Chapter 71	**1.** Remove and examine aft fairing and attachment fasteners for condition and security.		
	2. Examine fairing retainer for condition.		
	3. Examine exterior of aft deck structure for condition.		
	4. After completion of the inspection, make sure to reinstall all the panels, fairings, and cowlings removed during the inspection.		
	OIL SYSTEM		
Chapter 79	**1.** Examine oil cooler area for evidence of oil leaks. Examine oil cooler pan for cleanliness and make sure the drain is not blocked.		
	2. Examine all flexible and rigid fluid lines for condition and security.		
	a. Pay particular attention for chafing damage and kinked lines.		

PROGRESSIVE INSPECTIONS

5-24. 300-HOUR AIRFRAME PROGRESSIVE INSPECTION — EVENT NO. 4 (CONT)

DATA REFERENCE	INSPECTION TASK DESCRIPTION	INITIAL MECH	INITIAL OTHER
	3. Examine oil cooler core for obstructions and cleanliness.		
Chapter 65	**4.** Examine oil cooler blower and housing for cleanliness, condition, and security.		
Chapter 79	**5.** Examine oil tank for leakage, condition, and security. Check oil for contamination.		
	6. Examine oil tank supports for condition and security.		
Chapter 71	**7.** Examine the oil cooler seals bonded to the oil cooler for condition and security.		
	8. Examine external scavenge oil filter system (STC) for condition and security, if installed.		
	DRIVETRAIN		
Chapter 65	**1.** Examine the oil cooler blower impeller for condition and security.		
	NOTE Oil cooler blower impeller 206-061-432-031 requires penetrant inspection. Impeller 206-061-432-109 and subsequent do not require penetrant inspection.		
BHT-ALL-SPM, Chapter 6	**2.** Using dye penetrant methods, inspect oil cooler blower impeller 206-061-432-031 for cracks. Give particular attention to the mounting flange where individual blades attach. Inspection may be accomplished with impeller installed.		
Chapter 65	**3.** Examine oil cooler blower impeller shaft for condition.		
	4. Examine oil cooler blower hanger bearings and brackets for grease leakage and evidence of overheating.		
Chapter 12	**5.** Lubricate oil cooler blower hanger bearings.		
Chapter 65	**6.** Examine aft short shaft (aluminium) for condition and security.		
	7. Examine aft short shaft (aluminium) splined adapter for wear.		

PROGRESSIVE INSPECTIONS

5-24. 300-HOUR AIRFRAME PROGRESSIVE INSPECTION — EVENT NO. 4 (CONT)

DATA REFERENCE	INSPECTION TASK DESCRIPTION	INITIAL MECH	INITIAL OTHER
Chapter 12	**8.** Lubricate aft short shaft (aluminum) splined adapter.		
Chapter 65	**9.** Torque check disc pack coupling fasteners 50 to 70 inch-pounds (5.7 to 7.9 Nm).		
Chapter 96	**ELECTRICAL**		
	1. Examine all electrical components, wires, cables, and connectors in the area of the aft deck for chafing, general condition, and security.		
	ZONE 6 — TAILBOOM		
Chapter 11	**PLACARDS AND MARKINGS**		
	1. Examine the placards, decals, and markings. Ensure they are readable, correctly applied, and in agreement with the applicable configuration of your helicopter.		
	TAILBOOM STRUCTURE		
	NOTE In the event that cracks are found during inspection of tailboom, contact Product Support Engineering.		
Chapter 53	**1.** Clean entire tailboom taking particular care to remove all grime and dirt.		
	2. Remove tail rotor driveshaft and gearbox fairings. Inspect for condition and attachment of fasteners.		
Chapter 53	**3.** Examine entire tailboom for cracks, dents, deformation, waviness, working rivets, and chafing between tailboom skin and fairing. Pay particular attention to the left side upper quadrant of the tailboom. Also pay particular attention to the rivets attaching the tail rotor gearbox support to the tailboom.		
BHT-ALL-SRM	**4.** Replace any loose or working rivets found.		
	5. Replace removed, damaged, or worn anti-chafing adhesive tape (C-460) as required.		

PROGRESSIVE INSPECTIONS

5-24. 300-HOUR AIRFRAME PROGRESSIVE INSPECTION — EVENT NO. 4 (CONT)

DATA REFERENCE	INSPECTION TASK DESCRIPTION	INITIAL MECH	INITIAL OTHER
	6. Examine driveshaft cover clips for condition and security. Inspect all clip edges for integrity of sealant. Reseal as required.		
Chapter 53	**7.** Examine horizontal stabilizer for condition and security of attachment. Verify security of all attachment bolts. Make sure the vertical through bolts can be rotated. Inspect the inboard rib for cracks.		
	8. Inspect the vertical fin attachment support for condition and damage. Pay particular attention to the vertical fin attachment points.		
	9. Examine vertical fin assembly for condition and security.		
	10. Torque check vertical fin attachment hardware 75 to 95 inch-pounds (8.47 to 10.75 Nm).		
	11. Examine for open drains on lower skin of tailboom and clear any obstructions.		
	12. Examine antennas for damage and security.		
Chapter 32	**13.** Examine vertical fin tailskid for condition, security, and signs of ground contact.		
	TAIL ROTOR DRIVESHAFTS		
Chapter 65	**1.** Examine tail rotor driveshaft hanger bearings for excessive grease leakage and evidence of overheating.		
	2. Examine the hanger bearing support brackets for condition and security.		
Chapter 12	**3.** Lubricate tail rotor driveshaft hanger bearings.		
	4. Examine and lubricate the aft tail rotor driveshaft splined adapter.		
Chapter 65	**5.** Examine the long tail rotor driveshaft or segmented driveshafts for condition and security. Check splined adapters for adequate lubrication and freedom of movement.		
	6. Torque check disc pack coupling fasteners 50 to 70 inch-pounds (5.7 to 7.9 Nm).		

PROGRESSIVE INSPECTIONS

5-24. 300-HOUR AIRFRAME PROGRESSIVE INSPECTION — EVENT NO. 4 (CONT)

DATA REFERENCE	INSPECTION TASK DESCRIPTION	INITIAL MECH	INITIAL OTHER
	TAIL ROTOR GEARBOX		
Chapter 53	**1.** Examine tail rotor gearbox support for condition and security. Pay particular attention for cracks at the gearbox attachment holes.		
Chapter 65	**2.** Examine tail rotor gearbox for oil leaks, condition and security.		
	3. Examine gearbox oil for evidence of contamination.		
	4. Examine tail rotor output shaft for condition.		
	5. Torque check tail rotor gearbox retaining nuts 50 to 70 inch-pounds (5.6 to 7.9 Nm).		
	6. Examine the tail rotor gearbox chip detector for accumulated material.		
Chapter 96	**7.** Perform operational check of the tail rotor gearbox chip detector.		
Chapter 67	**TAIL ROTOR PITCH CHANGE CONTROLS**		
	1. Examine the tail rotor pitch change control mechanism for freedom of travel throughout range and for condition and security.		
	2. Examine the following tail rotor pitch change components:		
	a. Boot for condition, security, and evidence of grease or oil leakage.		
	b. Lower control mechanism rod for condition of bearings.		
	c. Pitch links and spherical bearings for condition and security.		
	d. Crosshead for condition and security.		
	e. Knurled nut for condition and security and liner for excessive play.		

PROGRESSIVE INSPECTIONS

5-24. 300-HOUR AIRFRAME PROGRESSIVE INSPECTION — EVENT NO. 4 (CONT)

DATA REFERENCE	INSPECTION TASK DESCRIPTION	INITIAL MECH	INITIAL OTHER
Chapter 96	**ELECTRICAL** **1.** Examine all electrical components, wires, cables, and connectors in the area of the tailboom and vertical fin for chafing, general condition, and security. **2.** Examine the navigation lights and anti-collision light for condition, security, and operation. **GROUND RUN** **CAUTION** GROUND RUN OF HELICOPTER TO BE ACCOMPLISHED BY QUALIFIED PERSONNEL ONLY.		
Chapter 12	**1.** Make sure applicable servicing requirements have been carried out. **2.** Check oil level of transmission, hydraulic tank, engine, and tail rotor gearbox prior to running helicopter. **3.** Make sure that helicopter is ready for ground run and that surrounding area is clear.		
BHT-206A-FM-1, BHT-206B-FM-1, BHT-206B3-FM-1	**4.** Start the helicopter and conduct ground run at 100% N_R to check for leaks, and ensure all systems are operational, and parameters are within Flight Manual limitations. **5.** Shut down the helicopter.		

PROGRESSIVE INSPECTIONS

5-25. 300-HOUR AIRFRAME PROGRESSIVE INSPECTION — EVENT NO. 5

DATA REFERENCE	INSPECTION TASK DESCRIPTION	INITIAL MECH	INITIAL OTHER
	DATE: _____ W.O. _____		
	FACILITY: _____		
	HELICOPTER S/N: _____		
	REGISTRY NO.: _____		
	TOTAL TIME: _____		
	SIGNATURE: _____		
	ZONE 7 — CABIN INTERIOR		
Chapter 11	**PLACARDS AND MARKINGS**		
	1. Examine the placards, decals, and markings. Ensure they are readable, correctly applied, and in agreement with the applicable configuration of your helicopter.		
BHT-206A-FM-1, BHT-206B-FM-1, BHT-206B3-FM-1	**INSTRUMENTS**		
	1. Examine instruments and instrument panel for condition, security, and for correct markings.		

PROGRESSIVE INSPECTIONS

5-25. 300-HOUR AIRFRAME PROGRESSIVE INSPECTION — EVENT NO. 5 (CONT)

DATA REFERENCE	INSPECTION TASK DESCRIPTION	INITIAL MECH	INITIAL OTHER
	AIRFRAME		
Chapter 25	**CAUTION** EXERCISE CARE AND USE ADEQUATE SCREW LENGTH WHEN REINSTALLING VERTICAL TUNNEL COVER TO AVOID CONTACT WITH TAIL ROTOR CONTROL TUBE. IT IS RECOMMENDED THAT THE FIFTH SCREW FROM THE TOP AND NUTPLATE, IF INSTALLED, ON LEFT SIDE VERTICAL TUNNEL COVER BE REPLACED WITH A SPEED CLINCH C60207AA-020. WASHER AN960PD10 MAY BE USED AS REQUIRED UNDER SPEED CLINCH HEAD TO ADJUST FOR GRIP LENGTH.		
	1. Remove cabin overhead upholstery, hat bin, soundproofing blanket, aft vertical tunnel covers, and roll-over bulkhead access panels.		
Chapter 53	**2.** Remove roof beam access panels.		
Chapter 67	**3.** Examine flight control tubes inside roof beam for condition and security.		
Chapter 53	**4.** Examine vertical tunnel, roof beam, and roof shell structure for condition.		
	5. Examine aft passenger seat bulkhead for distortion and/or cracks and indication of screw contact in the area of hat bin attachment nutplates.		
Chapter 96	**6.** Examine electrical components behind hat bin for condition, security, and cleanliness.		
Chapter 53	**7.** Examine engine and transmission support structure for cracks, corrosion, or loose fasteners.		

PROGRESSIVE INSPECTIONS

5-25. 300-HOUR AIRFRAME PROGRESSIVE INSPECTION — EVENT NO. 5 (CONT)

DATA REFERENCE	INSPECTION TASK DESCRIPTION	INITIAL MECH	INITIAL OTHER
	CAUTION EXERCISE CARE AND USE ADEQUATE SCREW LENGTH WHEN REINSTALLING VERTICAL TUNNEL COVER TO AVOID CONTACT WITH TAIL ROTOR CONTROL TUBE.		
	8. In the vertical tunnel area, examine the following:		
Chapter 67	**a.** Flight control system tubes for evidence of chafing with oil line or flex cable.		
	b. Flight control system bellcranks, levers, supports, and walking beams for binding, excessive looseness, and security of attachment.		
Chapter 95	**c.** Oil lines for leakage, condition, and security.		
Chapter 53	**d.** Roof beam interface with vertical tunnel for cracks, corrosion, and loose fasteners.		
	e. Vertical tunnel stiffening angles at roof beam interface for cracks, condition, and loose fasteners.		
Chapter 25 and Chapter 53	**9.** Remove crew seat cushions and panels and examine the following:		
Chapter 67 and Chapter 76	**a.** Control tubes, N_1 throttle cable, bellcranks, levers, yokes, and supports for bending, excessive looseness, and security of attachment.		
Applicable Service Instruction	**b.** Heater ducts for chafing with controls, if installed.		
Chapter 95	**c.** Oil lines for leakage and general condition.		
Chapter 96	**d.** Wiring and electrical components for condition and security.		
Chapter 53	**e.** Structure for corrosion, cracks, and condition.		

PROGRESSIVE INSPECTIONS

5-25. 300-HOUR AIRFRAME PROGRESSIVE INSPECTION — EVENT NO. 5 (CONT)

DATA REFERENCE	INSPECTION TASK DESCRIPTION	INITIAL MECH	INITIAL OTHER
	EQUIPMENT AND FURNISHINGS		
Chapter 53	**1.** Examine the cabin floor for condition.		
Chapter 25	**2.** Examine the seat assemblies for condition and security.		
IL GEN-05-103	**3.** Examine passenger and crew restraints and webbing for condition and security.		
	4. Verify operation of passenger and crew inertia reels and belt buckles. Pull promptly on each reel to confirm the proper activation of the reel locking mechanism.		
	5. Examine the interior trim for condition and security.		
Chapter 56	**6.** Verify sliding windows for safety and smoothness of sliding.		
Chapter 21	**7.** Examine the ventilation system for condition and security.		
	8. Verify nose vents for proper operation, absence of obstructions or debris, and open drains.		
Chapter 95	**9.** Verify for proper operation of the fuel valve switch guard.		
Chapter 26	**10.** Inspect cabin fire extinguisher for condition, security, and proper charge.		
Chapter 21	**11.** Verify proper operation of ventilation inlet control cables.		
	12. Examine first aid kit, replace missing or out of date items.		
Chapter 67	**CONTROLS**		
	1. Examine the collective control stick for condition, security, and minimum friction. Examine copilot collective control stick, if installed.		
	2. Examine the cyclic control stick for condition, security, and minimum friction. Examine copilot cyclic control stick, if installed.		
	3. Examine the anti-torque control pedals for condition, security, and minimum friction. Examine copilot anti-torque control pedals, if installed.		

PROGRESSIVE INSPECTIONS

5-25. 300-HOUR AIRFRAME PROGRESSIVE INSPECTION — EVENT NO. 5 (CONT)

DATA REFERENCE	INSPECTION TASK DESCRIPTION	INITIAL MECH	INITIAL OTHER
Chapter 96	**ELECTRICAL**		
	1. Verify operation of cockpit map reading light.		
	2. Verify operation of aft cabin reading lights, if installed.		
	CAUTION USE EXTREME CARE WHEN IN PROXIMITY OF PITOT TUBE WITH HEAT APPLIED. TOUCHING TUBE MAY RESULT IN SERIOUS BURNS.		
	3. Verify operation of the pitot tube heating system.		
	4. Verify operation of defog blowers.		
	5. Verify operation of ENGINE OUT and LOW ROTOR RPM audio and mute switch, if installed.		
	6. Verify illumination of all caution panel annunciator light segments by depressing test switch, or each individual light segment, as applicable.		
	7. Verify instrument lighting and dimming capabilities.		
	ZONE 8 — FORWARD FUSELAGE		
	PLACARDS AND MARKINGS		
Chapter 11	**1.** Examine the placards, decals, and markings. Ensure they are readable, correctly applied, and in agreement with the applicable configuration of your helicopter.		
	FUSELAGE		
Chapter 53	**1.** Examine forward fuselage for condition.		
Chapter 52	**2.** Examine all cabin doors for condition and security. Give special attention to the following:		
	a. Hinges		

PROGRESSIVE INSPECTIONS

5-25. 300-HOUR AIRFRAME PROGRESSIVE INSPECTION — EVENT NO. 5 (CONT)

DATA REFERENCE	INSPECTION TASK DESCRIPTION	INITIAL MECH	INITIAL OTHER
	b. Seals		
	c. Latches for proper adjustment, positive locking, and wear		
	d. Windows		
	e. Handles		
BHT-206-SI-68	**3.** Examine removable litter door post for condition and security, if installed. Examine the door post handle for proper operation.		
Chapter 95	**4.** Drain moisture from pitot and static piping installation.		
Chapter 53	**5.** Examine the external power door and receptacle for condition and security.		
	6. Examine battery compartment door, door seal, and attachment for condition and security.		
Chapter 52	**7.** Examine components in battery compartment for condition and security.		
Chapter 32	**8.** Examine cabin entry steps for condition and security, if installed.		
Chapter 52	**9.** Examine windshields and skylights for condition.		
Chapter 53	**10.** Examine upper fuselage for evidence of water leaks.		
	11. Examine lower fuselage for indication of fuel leaks, dents, cracks, corrosion, delamination, loose or missing rivets, and condition.		
	12. Examine all fuselage sealant joints for condition. Restore sealant as necessary.		
Chapter 96 and Chapter 97	**ELECTRICAL AND AVIONICS**		
	1. Examine all visible electrical components, wires, cables, and connectors in the area of the forward fuselage for chafing, general condition, and security.		

PROGRESSIVE INSPECTIONS

5-25. 300-HOUR AIRFRAME PROGRESSIVE INSPECTION — EVENT NO. 5 (CONT)

DATA REFERENCE	INSPECTION TASK DESCRIPTION	INITIAL MECH	INITIAL OTHER
	2. Remove battery and recondition in accordance with BHT-ALL-SPM and manufacturer's service manual.		
	3. Examine battery vent tubes for obstruction or damage.		
	4. Perform operational check of the battery temperature sensing system.		
	5. If battery was removed, clean mounting area prior to installing serviceable battery.		
	6. Verify operation of landing lights.		
	7. Verify operation of lower fuselage mounted position lights, if installed.		
	8. Examine antennas for condition and security.		
	GROUND RUN		
	CAUTION GROUND RUN OF HELICOPTER TO BE ACCOMPLISHED BY QUALIFIED PERSONNEL ONLY.		
Chapter 12	**1.** Make sure applicable servicing requirements have been carried out.		
	2. Check oil level of transmission, hydraulic tank, engine, and tail rotor gearbox prior to running helicopter.		
	3. Make sure that helicopter is ready for ground run and that surrounding area is clear.		
BHT-206A-FM-1, BHT-206B-FM-1, BHT-206B3-FM-1	**4.** Start the helicopter and conduct ground run at 100% N_R to check for leaks, and ensure all systems are operational, and parameters are within Flight Manual limitations.		
	5. Shut down the helicopter.		

PROGRESSIVE INSPECTIONS

5-26. 300-HOUR AIRFRAME PROGRESSIVE INSPECTION — EVENT NO. 6

DATA REFERENCE	INSPECTION TASK DESCRIPTION	INITIAL MECH	INITIAL OTHER
	DATE: _____ **W.O.** _____		
	FACILITY: _____		
	HELICOPTER S/N: _____		
	REGISTRY NO.: _____		
	TOTAL TIME: _____		
	SIGNATURE: _____		
	ZONE 9 — AFT FUSELAGE		
	PLACARDS AND MARKINGS		
Chapter 11	**1.** Examine the placards, decals, and markings. Make sure they are readable, correctly applied, and in agreement with the applicable configuration of your helicopter.		
	FUSELAGE (EXTERIOR)		
Chapter 53	**1.** Examine aft fuselage for dents, cracks, corrosion, delamination, loose or missing rivets, and condition.		
	2. Examine aft fuselage for indications of fuel or oil leaks.		
Chapter 28	**3.** Examine the fuel cap for condition and security.		
Chapter 96	**4.** Examine the grounding plug for condition.		
	5. Examine aft crosstube support tunnel structure for cracks, corrosion, distortion, and loose fasteners.		
Chapter 6 and Chapter 53	**6.** Examine all fuselage drains for condition and freedom from obstructions.		
Applicable Service Instruction	**7.** Examine heater and/or air conditioning inlets and outlets for cleanliness and absence of obstructions, if installed.		

PROGRESSIVE INSPECTIONS

5-26. 300-HOUR AIRFRAME PROGRESSIVE INSPECTION — EVENT NO. 6 (CONT)

DATA REFERENCE	INSPECTION TASK DESCRIPTION	INITIAL MECH	INITIAL OTHER
Chapter 53	**8.** Examine baggage compartment door, seal, and latches for operation, condition, and security.		
Chapter 96	**9.** Verify operation of the baggage door ajar caution light, if installed.		
	FUSELAGE (INTERIOR)		
Chapter 53	**1.** Examine baggage compartment for condition.		
	2. Gain access to inside of aft fuselage through access panels in baggage compartment and access panel located on the aft right side fuselage:		
	a. Examine access panels and fasteners for condition.		
	b. Examine under engine pan for fuel, oil, or water leaks.		
	c. Examine drain lines for condition and security.		
	d. Examine aft fuselage longerons for cracks, corrosion, and condition. Pay particular attention to the upper left longeron.		
	e. Examine interface between longerons and engine pan structure for cracks, corrosion, distortion, and loose fasteners.		
	f. Inspect engine mount attachment structure for condition.		
	CAUTION ANY CRACK, CORROSION, OR LOOSE OR SHEARED RIVET IS CAUSE FOR IMMEDIATE GROUNDING OF THE HELICOPTER UNTIL THE PROBLEM IS CORRECTED.		
	g. Examine the four tailboom attachment fittings on fuselage aft bulkhead and tailboom forward bulkhead for cracks. Give special attention to the tailboom attachment fittings/ intercostals and bolts, and to fasteners between the intercostals. Particular attention must be given to inspection of the upper left fitting.		

PROGRESSIVE INSPECTIONS

5-26. 300-HOUR AIRFRAME PROGRESSIVE INSPECTION — EVENT NO. 6 (CONT)

DATA REFERENCE	INSPECTION TASK DESCRIPTION	INITIAL MECH	INITIAL OTHER
	3. Remove fuel shutoff valve access panel.		
	a. Examine structure for cracks and corrosion.		
Chapter 28	**b.** Examine fuel system components for leaks and general condition.		
Chapter 96	**c.** Examine wires and connectors for condition.		
	CONTROLS		
Chapter 27	**1.** Examine the anti-torque control system components for condition and security.		
Chapter 96 and Chapter 97	**ELECTRICAL AND AVIONICS**		
	1. Examine antennas for condition and security.		
	2. Examine all components, electrical wiring, cables, and connectors for chafing, general condition, and security.		
	3. Examine all optional equipment installed in the aft fuselage area for condition and security.		
	4. Verify proper operation of fuel sump drain valve switch.		
	ZONE 10 — LANDING GEAR		
Chapter 11	**PLACARDS AND MARKINGS**		
	1. Examine the placards, decals, and markings. Ensure they are readable, correctly applied, and in agreement with the applicable configuration of your helicopter.		
Chapter 32	**CROSSTUBES**		
	1. Examine crosstube retaining straps, cushions, and attaching hardware for condition and security.		
	2. Examine fuselage attachment fittings for condition and security.		

PROGRESSIVE INSPECTIONS

5-26. 300-HOUR AIRFRAME PROGRESSIVE INSPECTION — EVENT NO. 6 (CONT)

DATA REFERENCE	INSPECTION TASK DESCRIPTION	INITIAL MECH	INITIAL OTHER
	3. Examine electrical bonding strips for condition and security, if installed. **4.** Examine fairings for condition and security, if installed. **5.** Examine crosstube riveted or clamped supports for condition and security. Give particular attention to the sealant joints around supports. Restore sealant (C-251) and paint finish as required. **6.** Examine crosstubes for corrosion and damage. Give particular attention to areas where equipment is mounted. Repair and/or restore surface protection as required. **7.** Examine cabin entry steps for condition and security, if installed. **8.** Examine sealant joint at junction with skid tube saddles. Restore sealant (C-251) and paint finish as required.		
Chapter 32	**SKID TUBES** **1.** Examine skid tubes for corrosion, damage, and security. **2.** Examine skid shoes for condition and security. **3.** Examine skid tube saddles for corrosion, damage, and security. **4.** Examine ground handling wheel attachment bolts for condition and security.		
	GROUND RUN **CAUTION** GROUND RUN OF HELICOPTER TO BE ACCOMPLISHED BY QUALIFIED PERSONNEL ONLY.		
Chapter 12	**1.** Make sure applicable servicing requirements have been carried out.		

PROGRESSIVE INSPECTIONS

5-26. 300-HOUR AIRFRAME PROGRESSIVE INSPECTION — EVENT NO. 6 (CONT)

DATA REFERENCE	INSPECTION TASK DESCRIPTION	INITIAL MECH	INITIAL OTHER
	2. Check oil level of transmission, hydraulic tank, engine, and tail rotor gearbox prior to running helicopter.		
	3. Make sure that helicopter is ready for ground run and that surrounding area is clear.		
BHT-206A-FM-1, BHT-206B-FM-1, BHT-206B3-FM-1	**4.** Start the helicopter and conduct ground run at 100% N_R to check for leaks, and ensure all systems are operational, and parameters are within Flight Manual limitations.		
Chapter 96	**5.** Check the voltage regulator setting. Adjust as required.		
	6. Shut down the helicopter.		

PERIODIC INSPECTION

5-27. 300-HOUR AIRFRAME PERIODIC INSPECTION

DATA REFERENCE	INSPECTION TASK DESCRIPTION	INITIAL MUCH	INITIAL OTHER
	DATE: _____ **W.O.** _____ **FACILITY:** _____ **HELICOPTER S/N:** _____ **REGISTRY NO.:** _____ **TOTAL TIME:** _____ **SIGNATURE:** _____		
Paragraph 5-21 through paragraph 5-26	**1.** Do this inspection every 300 hours of operation or every 12 calendar months. **2.** Do all six events of the 300-hour progressive inspection.		

SCHEDULED INSPECTIONS

5-28. 100-HOUR INSPECTION

DATA REFERENCE	INSPECTION TASK DESCRIPTION	INITIAL MECH	INITIAL OTHER
	DATE: _____ **W.O.** _____ **FACILITY:** _____ **HELICOPTER S/N:** _____ **REGISTRY NO.:** _____ **TOTAL TIME:** _____ **SIGNATURE:** _____		
	NOTE 100-hour inspection must be accomplished when using the 300-hour airframe progressive inspection program or the 300-hour airframe periodic inspection program.		
Chapter 62	**MAIN ROTOR**		
	1. Torque check pillow block retention hardware 84 to 107 inch-pounds (9.4 to 12 Nm). Examine for misalignment of anti-slippage marks (ASB 206-97-90).		
Chapter 67	**FLIGHT CONTROLS**		
ASB 206-76-1	**2.** Examine servo actuator support for condition.		
	a. If installed, inspect hydraulic actuator support 206-001-520-005 as follows: • Visually inspect the two forward webs of the support assembly for cracks with a 5X magnifying glass. All cracks reported in the support assembly have originated in the top edge of the forward web. • If a crack is found, remove and replace the support assembly. Notify Product Support Engineering concerning any assembly found cracked.		

SCHEDULED INSPECTIONS

5-28. 100-HOUR INSPECTION (CONT)

DATA REFERENCE	INSPECTION TASK DESCRIPTION	INITIAL MECH	INITIAL OTHER
Chapter 53	**TAILBOOM** **CAUTION** ANY CRACK, CORROSION, OR LOOSE OR SHEARED RIVET IS CAUSE FOR IMMEDIATE GROUNDING OF THE HELICOPTER UNTIL THE PROBLEM IS CORRECTED. **3.** Remove the access panel on right side of aft fuselage.		
Chapter 53	**4.** Make sure the area is clean and examine the four tailboom attachment fittings on fuselage aft bulkhead and tailboom forward bulkhead for cracks. Give special attention to the tailboom attachment fittings/intercostals and bolts, and to fasteners between the intercostals. Particular attention must be given to inspection of the upper left fitting. **5.** Make sure the area is clean and visually examine all visible sections of the upper left longeron between aft fuselage frame at STA 179.92 and fuselage frame at STA 206.76 for general condition, corrosion, and cracks. **a.** If corrosion or a defect is found, submit details to Product Support Engineering for evaluation and possible repair. **b.** If no defects are found, reinstall the access panel. **AFTER COMPLETION OF INSPECTION** **1.** Reinstall all panels, fairings, and cowlings removed during inspection.		

SCHEDULED INSPECTIONS

5-29. 300-HOUR INSPECTION

DATA REFERENCE	INSPECTION TASK DESCRIPTION	INITIAL MECH	INITIAL OTHER
	DATE: _____ W.O. _____ **FACILITY: _____** **HELICOPTER S/N: _____** **REGISTRY NO.: _____** **TOTAL TIME: _____** **SIGNATURE: _____**		
	NOTE Every 300 hours of operation, the 300-hour inspection must be accomplished in conjunction with the 100-hour airframe progressive inspection program or the 100-hour airframe periodic inspection program.		
	FORWARD FUSELAGE		
	CABIN INTERIOR		
Chapter 25	**1.** Remove cabin overhead upholstery, hat bin, soundproofing blanket, aft vertical tunnel covers, and roll-over bulkhead access panels.		
Chapter 53	**2.** Remove roof beam access panels.		
Chapter 67	**3.** Examine flight control tubes inside roof beam for condition and security.		
Chapter 53	**4.** Examine vertical tunnel, roof beam, and roof shell structure for condition.		
	5. Examine aft passenger seat bulkhead for distortion and/or cracks and indication of screw contact in the area of hat bin attachment nutplates.		

SCHEDULED INSPECTIONS

5-29. 300-HOUR INSPECTION (CONT)

DATA REFERENCE	INSPECTION TASK DESCRIPTION	INITIAL MECH	INITIAL OTHER
Chapter 96	**6.** Examine electrical components behind hat bin for condition, security, and cleanliness.		
Chapter 53	**7.** Examine engine and transmission support structure for cracks, corrosion, or loose fasteners.		
	CAUTION EXERCISE CARE AND USE ADEQUATE SCREW LENGTH WHEN REINSTALLING VERTICAL TUNNEL COVER TO AVOID CONTACT WITH TAIL ROTOR CONTROL TUBE. IT IS RECOMMENDED THAT THE FIFTH SCREW FROM THE TOP AND NUTPLATE, IF INSTALLED, ON LEFT SIDE VERTICAL TUNNEL COVER BE REPLACED WITH A SPEED CLINCH C60207AA-020. WASHER AN960PD10 MAY BE USED AS REQUIRED UNDER SPEED CLINCH HEAD TO ADJUST FOR GRIP LENGTH.		
	8. In the vertical tunnel area, examine the following:		
Chapter 67	**a.** Flight control system tubes for evidence of chafing with oil line or flex cable.		
	b. Flight control system bellcranks, levers, supports, and walking beams for binding, excessive looseness, and security of attachment.		
Chapter 95	**c.** Oil lines for leakage, condition, and security.		
Chapter 53	**d.** Roof beam interface with vertical tunnel for cracks, corrosion, and loose fasteners.		
	e. Vertical tunnel stiffening angles at roof beam interface for cracks, condition, and loose fasteners.		

SCHEDULED INSPECTIONS

5-29. 300-HOUR INSPECTION (CONT)

DATA REFERENCE	INSPECTION TASK DESCRIPTION	INITIAL MECH	INITIAL OTHER
Chapter 25 and Chapter 53	**9.** Remove pilot and copilot seat cushions and panels and examine the following:		
Chapter 67 and Chapter 76	**a.** Control tubes, N_1 throttle cable, bellcranks, levers, yokes, and supports for bending, excessive looseness, and security of attachment.		
Applicable Service Instruction	**b.** Heater ducts for chafing with controls, if installed.		
Chapter 95	**c.** Oil lines for leakage and general condition.		
Chapter 96	**d.** Wiring and electrical components for condition and security.		
Chapter 53	**e.** Structure for corrosion, cracks, and condition.		
	CONTROLS		
Chapter 67	**1.** Verify minimum friction of collective control and readjust as required. Verify minimum friction of copilot collective control stick, if installed.		
	2. Verify minimum friction of cyclic control and readjust as required. Verify minimum friction of copilot cyclic control stick, if installed.		
	3. Verify minimum friction of anti-torque control pedals and readjust as required. Verify minimum friction of copilot anti-torque control pedals, if installed.		
Chapter 96	**ELECTRICAL**		
	1. Remove battery and recondition in accordance with BHT-ALL-SPM and manufacturer's service manual.		
	FUSELAGE		
Chapter 52	**1.** Inspect latches on crew doors for correct adjustment.		
	2. Inspect latches on passenger doors, and baggage door for correct adjustment.		

SCHEDULED INSPECTIONS

5-29. 300-HOUR INSPECTION (CONT)

DATA REFERENCE	INSPECTION TASK DESCRIPTION	INITIAL MECH	INITIAL OTHER
Chapter 62	**MAIN ROTOR SYSTEM**		
	1. Remove main rotor blade leading edge erosion protection tape, if installed.		
	2. Examine leading edge of blades for corrosion and erosion. Restore contour as necessary.		
	3. If applicable, reinstall main rotor blade leading edge erosion protection tape.		
	PYLON AREA		
	SWASHPLATE ASSEMBLY		
Chapter 62	**1.** Examine and adjust swashplate tilt friction as necessary.		
	2. DELETED		
	HYDRAULIC		
Chapter 12, Chapter 29, Chapter 63	**1.** Remove hydraulic pump and rotor tachometer generator.		
	2. Examine hydraulic pump splines, transmission oil pump splines, and rotor tachometer and adapter splines for condition and security.		
Chapter 12	**3.** Lubricate hydraulic pump driveshaft splines, oil pump splines, and rotor tachometer splines.		
	POWER PLANT AREA		
	GENERAL		
Rolls-Royce 250 Series Operation and Maintenance Manual, 5W2 or 10W2	**1.** Do engine inspection per the applicable Rolls-Royce Operation and Maintenance Manual.		

SCHEDULED INSPECTIONS

5-29. 300-HOUR INSPECTION (CONT)

DATA REFERENCE	INSPECTION TASK DESCRIPTION	INITIAL MECH	INITIAL OTHER
Chapter 95	**2.** Perform operational check of turbine outlet temperature system.		
Chapter 95 and Chapter 12	**3.** Examine N_1 and N_2 tachometer generator shaft splines and gearbox adapter splines for condition. Clean and lubricate shaft splines.		
Chapter 28	**FUEL SYSTEM**		
	AIRFRAME FUEL FILTER		
Chapter 28	**1.** Replace airframe fuel filter element, kit KD651511, element 52-01103-1, or element 7582301, as applicable.		
	2. Inspect filter head as follows:		
	a. Remove outlet port fitting from filter head. Using a 0.020 inch (0.508 mm) wire, pass wire through bleed hole in outlet port side of filter head to ensure that hole is unobstructed (applicable to fuel filter assemblies 306001, 306005, 222-366-621-001, -003, and -101, 52-2889-016, and 52-2889-016A).		
Chapter 28, Rolls-Royce 250 Series Operation and Maintenance Manual 5W2 or 10W2	**b.** Purge airframe fuel filter and engine fuel system.		
	NOTE When purging airframe fuel filter and the engine fuel system of air, ensure that both fuel boost pumps are ON and motor engine for approximately 15 seconds or until there is no evidence of air coming from fuel supply hose. In addition, depress the airframe fuel filter bypass indicator button during the motoring operation to remove air more rapidly.		
	3. Purge the engine fuel system per the Rolls-Royce engine fuel system purging procedure.		

SCHEDULED INSPECTIONS

5-29. 300-HOUR INSPECTION (CONT)

DATA REFERENCE	INSPECTION TASK DESCRIPTION	INITIAL MECH	INITIAL OTHER
BHT-206A-FM-1, BHT-206B-FM-1, BHT-206B3-FM-1	**4.** During ground run, operate helicopter at 100% N_2 for minimum of 2 minutes to ensure remaining air is purged from fuel filter head and to check for fuel leaks.		
Chapter 28	**FUEL PUMP**		
	NOTE This inspection is only applicable to helicopters S/N 4 through 3566 prior to incorporation of TB 206-82-75.		
	1. Check engine driven fuel pump filter impending bypass function as follows:		
	a. Disconnect the fuel hose from forward end of differential pressure switch and plug the hose.		
	b. Turn ON both fuel boost pumps and verify if engine FUEL FILTER caution light illuminates.		
	c. If the engine FUEL FILTER caution light illuminates, turn OFF both fuel boost pumps. Remove the plug and reconnect the fuel hose removed in step a.		
	d. If the engine FUEL FILTER caution light does not illuminate, troubleshoot and correct impending bypass caution system.		
	STARTER GENERATOR		
Chapter 71	**1.** Remove starter generator. Examine mounting pad and clamp for condition.		
Chapter 96	**2.** Examine commutator for wear. Replace starter generator if not smooth and bright, or if showing excessive wear.		
	3. Inspect brushes for wear.		
Chapter 71	**4.** Examine cooling duct and retention clamp for condition and security.		

SCHEDULED INSPECTIONS

5-29. 300-HOUR INSPECTION (CONT)

DATA REFERENCE	INSPECTION TASK DESCRIPTION	INITIAL MECH	INITIAL OTHER
	5. Examine the bearings of the starter generator for smooth rotation. Examine the splines on the starter generator driveshaft and the mating splines on the engine gear shaft for wear. If dry spline starter generator installed, clean splines and lubricate.		
	AFT FUSELAGE/TAILBOOM AREA		
	AFT FUSELAGE		
	1. Visually inspect longeron and engine pan interface for corrosion as follows:		
	a. Open access door in overhead baggage compartment.		
	b. Open engine compartment cowling.		
	c. Using bright light and mirror, inspect exposed upper and lower edges of the joints and fastener between aluminum longeron and titanium engine pan. Edge of sealant coating should be visible. No indications of corrosion are acceptable.		
BHT-206-SRM-1	**d.** If there is no indication of corrosion and the bonded surface seal is present, replace access panel and close engine compartment cowling door. If corrosion is present or bonded surface seal is not present, refer to the BHT-206-SRM-1 for repair procedures.		
	e. Inspect engine mount attachment structures for cracks and condition.		
	f. Remove fuel shutoff valve access panel. Inspect area for corrosion, cracks, and fuel leaks. Check wiring and plumbing for security and condition.		
	g. Inspect aft passenger rear bulkhead for indication of screw contact or cracks in area of hat bin attachment anchor nuts.		
	2. Inspect aft passenger rear bulkhead for distortion in area of hat bin attachment anchor nuts.		

SCHEDULED INSPECTIONS

5-29. 300-HOUR INSPECTION (CONT)

DATA REFERENCE	INSPECTION TASK DESCRIPTION	INITIAL MECH	INITIAL OTHER
	DRIVETRAIN		
Chapter 65 and Chapter 12	**1.** Examine forward short shaft (steel) splined adapters for excessive wear and lubricate.		
	NOTE Oil cooler blower impeller 206-061-432-031 requires penetrant inspection. Impeller 206-061-432-109 and subsequent do not require penetrant inspection.		
BHT-ALL-SPM, Chapter 6	**2.** Using dye penetrant methods, inspect oil cooler blower impeller 206-061-432-031 for cracks. Give particular attention to the mounting flange where individual blades attach. Inspection may be accomplished with impeller installed.		
	TAIL ROTOR DRIVESHAFT		
Chapter 65	**1.** Lubricate oil cooler blower and tail rotor driveshaft hanger bearings and check for evidence of overheating.		
Chapter 12	**2.** Examine and lubricate aft short shaft (aluminum) and aft tail rotor driveshaft splined adapters.		
Chapter 65	**TAIL ROTOR GEARBOX**		
	1. Torque check tail rotor gearbox retaining nuts 50 to 70 inch-pounds (5.6 to 7.9 Nm).		
	TAIL ROTOR HUB AND BLADE ASSEMBLY		
Chapter 18	**1.** During ground run, check dynamic balance of tail rotor hub and blade assembly.		
	2. Adjust as required.		

SCHEDULED INSPECTIONS

5-30. 1200-HOUR INSPECTION

DATA REFERENCE	INSPECTION TASK DESCRIPTION	INITIAL MECH	INITIAL OTHER
	DATE: _____ **W.O.** _____ **FACILITY:** _____ **HELICOPTER S/N:** _____ **REGISTRY NO.:** _____ **TOTAL TIME:** _____ **SIGNATURE:** _____		
	NOTE This inspection must be accomplished every 1200 flight hours.		
Chapter 67	**CYCLIC CONTROL STICK**		
Chapter 67	**1.** Remove pilot and copilot, if installed, cyclic control sticks.		
BHT-206B3-CR&O, Chapter 67	**2.** Clean lower 4 inches (101.6 mm) of removed cyclic stick tube(s) and inspect.		
	3. Visually inspect cyclic stick tubes for cracks with a 3X magnifying glass. Pay particular attention to the area adjacent to the two slots in the tube where two bolts secure the tube when installed in the pivot lever assembly.		
BHT-206B3-CR&O, BHT-ALL-SPM, Chapter 6	**4.** If a crack is suspected, remove paint and thoroughly inspect lower end of the cyclic stick tube(s) for cracking using the fluorescent penetrant method.		
	5. If a crack is found, replace the cyclic stick tube with a serviceable tube.		
	6. If no crack is found, inspect cyclic stick tube for mechanical and corrosion damage as follows:		
	a. Damaged and repaired areas must be separated by 1.0 inch (25 mm) minimum.		

SCHEDULED INSPECTIONS

5-30. 1200-HOUR INSPECTION (CONT)

DATA REFERENCE	INSPECTION TASK DESCRIPTION	INITIAL MECH	INITIAL OTHER
	b. Mechanical damage is not to exceed 0.005 inch (0.127 mm) depth and 1/3 tube circumference.		
	c. Corrosion damage is not to exceed 0.0025 inch (0.0635 mm) depth before, and 0.005 inch (0.127 mm) after repair, and 1/3 tube circumference.		
	d. Condemn as unserviceable a tube that does not meet these criteria.		
	7. Inspect bore of cyclic pivot lever assembly where stick tube is installed for mechanical and corrosion damage. Bore damage is not to exceed 0.002 inch (0.051 mm) for 1/4 of the circumference. Limit of one repair per bore. Repair or replace lever assembly as required.		
	8. For cyclic stick tubes considered serviceable, polish out any acceptable damage using 400 to 600 grit abrasive cloth or paper (C-423).		
	9. Thoroughly clean cyclic stick tube with water and mild detergent to completely remove residual penetrant and developer. Dry part completely.		
BHT-ALL-SPM, Chapter 3	**10.** Apply chemical film material (C-100) to bare metal area.		
BHT-ALL-SPM, Chapter 4	**11.** Touch up area with epoxy polyamide primer (C-204). Where finish paint coat is required, match to original finish with polyurethane coating (C-245).		
Chapter 67	**12.** Install pilot and copilot, if installed, cyclic control sticks.		

SCHEDULED INSPECTIONS

5-31. AS REQUIRED BY MANUFACTURER

DATA REFERENCE	INSPECTION TASK DESCRIPTION	INITIAL MECH	INITIAL OTHER
	DATE: _____ **W.O.** _____ **FACILITY:** _____ **HELICOPTER S/N:** _____ **REGISTRY NO.:** _____ **TOTAL TIME:** _____ **SIGNATURE:** _____		
	ENGINE		
Rolls-Royce 250 Series Operations and Maintenance Manual, 5W2 or 10W2	Perform engine inspection requirements.		

SCHEDULED INSPECTIONS

5-32. WEEKLY INSPECTION

DATA REFERENCE	INSPECTION TASK DESCRIPTION	INITIAL MECH	INITIAL OTHER
	DATE: _____ **W.O.** _____ **FACILITY:** _____ **HELICOPTER S/N:** _____ **REGISTRY NO.:** _____ **TOTAL TIME:** _____ **SIGNATURE:** _____		
Chapter 62 and Chapter 64	**MAIN ROTOR HUB AND BLADES, AND TAIL ROTOR HUB AND BLADES** **NOTE** The following procedures shall be accomplished as frequently as deemed necessary when operating in rain, corrosive salt laden air, or other adverse environmental conditions. The following preventive maintenance procedures for the main rotor hub and blades and tail rotor hub and blades are recommended to prevent corrosion and extend their life. The inspection may be accomplished more frequently or may be extended beyond the weekly interval, as deemed necessary, based on the actual operating environment. **1.** Wipe hub and blades with drycleaning solvent (C-304). **2.** Wash hub and blades with mild cleaning compound (C-318). Rinse with water and dry with clean cloths. **3.** Inspect hub and blades for evidence of corrosion.		

SCHEDULED INSPECTIONS

5-32. WEEKLY INSPECTION (CONT)

DATA REFERENCE	INSPECTION TASK DESCRIPTION	INITIAL MECH	INITIAL OTHER
	NOTE Do not allow corrosion preventive compound (C-125) to contact tail rotor blade bearings. **4.** Apply a light coat of corrosion preventive compound (C-125) to all hub and blade surfaces. Flood areas between main rotor hub grip tangs and blades, latch bolts to grips and yoke fillet areas just inboard of pitch horn to ensure complete coverage.		

SCHEDULED INSPECTIONS

5-33. 12-MONTH INSPECTION

DATA REFERENCE	INSPECTION TASK DESCRIPTION	INITIAL MECH	INITIAL OTHER
	DATE: _____ **W.O.** _____		
	FACILITY: _____		
	HELICOPTER S/N: _____		
	REGISTRY NO.: _____		
	TOTAL TIME: _____		
	SIGNATURE: _____		
	GENERAL		
	1. Make sure that a 100 or 300-hour airframe progressive inspection (all four or six events, as applicable) or the 100 or 300-hour airframe periodic inspection has been completed in the last 12 calendar month period.		
	2. Examine all fuel system, oil system, and hydraulic system filler caps for proper functioning and sealing. Make sure the sealing o-rings within the fillet caps are in good condition. Repair or replace the filler caps or replace sealing o-rings as necessary.		
Chapter 18	**3.** Do a dynamic balance of the main rotor hub and blade assembly		
	FUEL SYSTEM		
Chapter 96	**1.** Do an operational check of the fuel low caution system.		
	2. DELETED		
	AIRFRAME		
	Remove overhead upholstery, hat bin, soundproofing blanket, and access panels. Examine engine and transmission support structure for cracks and corrosion.		

SCHEDULED INSPECTIONS

5-34. 12 MONTHS OF COMPONENT OPERATION

DATA REFERENCE	INSPECTION TASK DESCRIPTION	INITIAL MECH	INITIAL OTHER
	DATE: _____ **W.O.** _____ **FACILITY:** _____ **HELICOPTER S/N:** _____ **REGISTRY NO.:** _____ **TOTAL TIME:** _____ **SIGNATURE:** _____		
	MAIN ROTOR MAST		
Chapter 63, BHT-206A/B/L-Series-CR&O,	**1.** Inspect mast assembly internal surface (internal diameter of mast) as follows:		
	a. Remove mast nut, flap restraint kit, and cap plug. With the use of a bright light, inspect internal surface (internal diameter) of mast for corrosion and condition of protective coating.		
	b. Install cap plug, flap restraint kit, and mast nut.		
Chapter 62	**2.** Torque check mast nut 250 to 275 foot-pounds (339.0 to 372 Nm) after 1 to 5 hours of flight operation.		

SCHEDULED INSPECTIONS

5-35. 24-MONTH INSPECTION

DATA REFERENCE	INSPECTION TASK DESCRIPTION	INITIAL MECH	INITIAL OTHER
	DATE: _____ **W.O.** _____ **FACILITY:** _____ **HELICOPTER S/N:** _____ **REGISTRY NO.:** _____ **TOTAL TIME:** _____ **SIGNATURE:** _____ **MAIN ROTOR FLIGHT CONTROL BOLTS/NUTS** **1.** Remove main rotor flight control bolts/nuts (1 through 13, Figure 5-2). **2.** Clean bolts/nuts with MEK (C-309). Wipe dry. **3.** Visually inspect bolts/nuts for corrosion and thread damage. Replace any bolts/nuts that have damaged threads, detectable wear, and/or corrosion. **4.** Apply a coating of corrosion preventive compound (C-104) to all bolt shanks prior to installation. Do not apply corrosion preventive compound to bolt threads. **5.** Install flight control bolts and attaching hardware. Torque nuts and install new cotter pins. **NOTE** Operation in environmental conditions that erodes corrosion preventive compound (C-101) may require periodic touch-up of corrosion preventive compound. Before touch-up, visually check exposed surfaces for evidence of corrosion. If corrosion is detected, accomplish step 1 through step 6. **6.** Apply a coating of corrosion preventive compound (C-101) to all bolt heads, washers, nuts, and exposed threads after installation.		

SCHEDULED INSPECTIONS

5-35. 24-MONTH INSPECTION (CONT)

DATA REFERENCE	INSPECTION TASK DESCRIPTION	INITIAL MECH	INITIAL OTHER
ASB 206-05-103	**FUEL VENT/PURGE FITTING FILTER CLEANING** **NOTE** This inspection is applicable to helicopters S/N 004 through 2123 Post ASB 206-05-103. **1.** Remove the fuel valve access panel on the right side of helicopter to get access to the fuel vent/purge fitting (1, Figure 5-3). **2.** Disconnect the fuel tube assembly (4) from the top of the filter (3). **3.** Remove the filter (3) and discard packing (2). **4.** Clean the filter (3) by back-flushing with clean fuel. Make sure the filter is clean or replace as necessary. **5.** Reinstall the filter (3) with new packing (2) and reconnect the fuel tube assembly (4) to the filter. **6.** Do After Fuel System Maintenance and/or Component Change inspection (paragraph 5-46). **7.** Reinstall the fuel valve access panel on right side of helicopter.		
Chapter 28	**FUEL SYSTEM** **1.** Remove the fuel boost pump assemblies and examine the fuel cell interiors for debris, water contamination and fungus growth.		

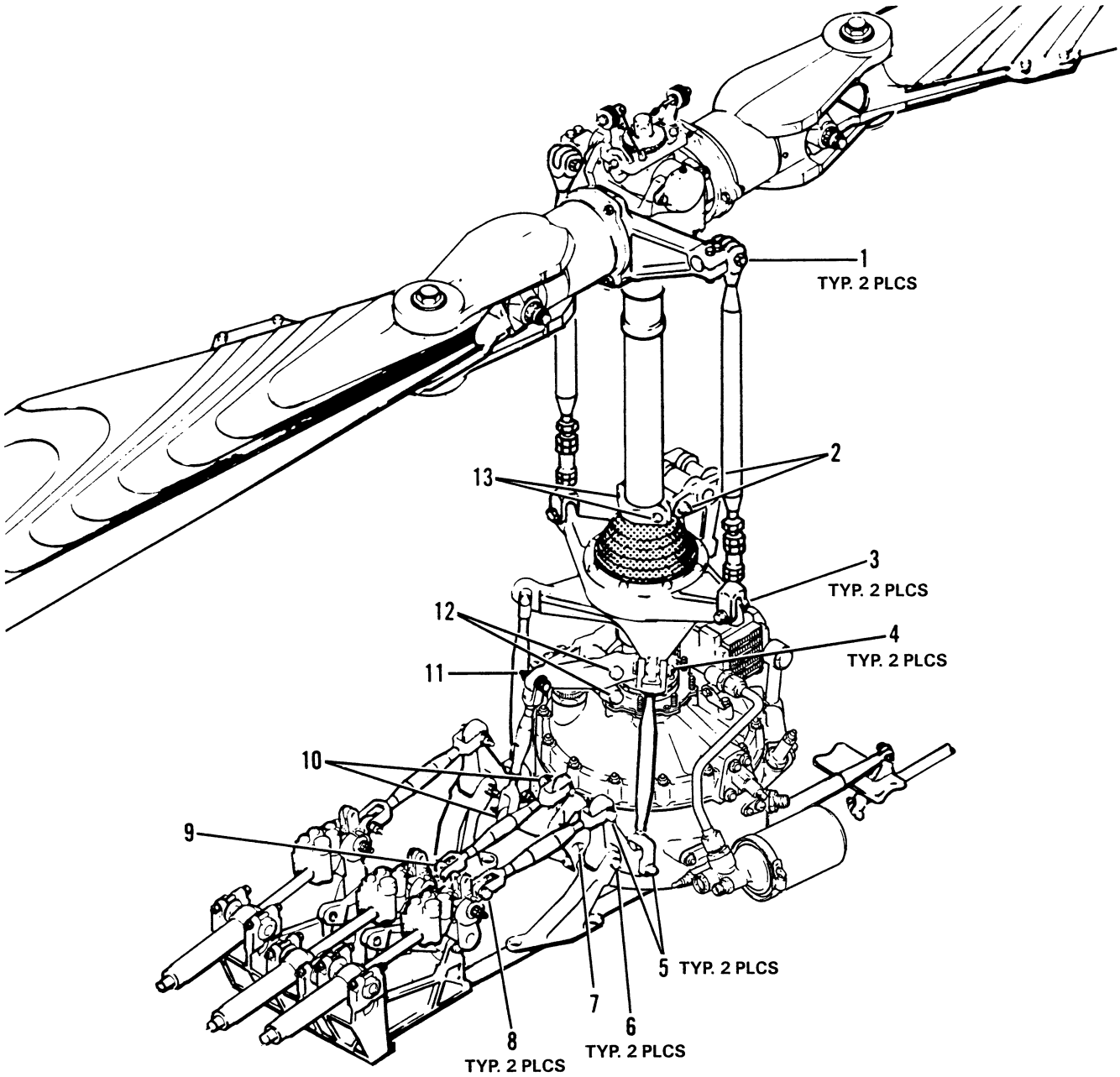

1. M/R pitch links to M/R hub pitch horns
2. Swashplate drive link/lever assembly
3. Swashplate to M/R pitch links
4. Cyclic control tubes to swashplate
5. Control tubes to cyclic bellcranks
6. Cyclic bellcrank pivots
7. Collective bellcrank pivot
8. Cyclic servos to control tubes
9. Collective servo to control tube
10. Control tubes to collective bellcrank
11. Control link to collective lever
12. Link assembly (collective lever to swashplate support)
13. Swashplate drive collar set

206A/BS-M-5-1

Figure 5-2. 24-Month Inspection of Main Rotor Flight Control System Bolts

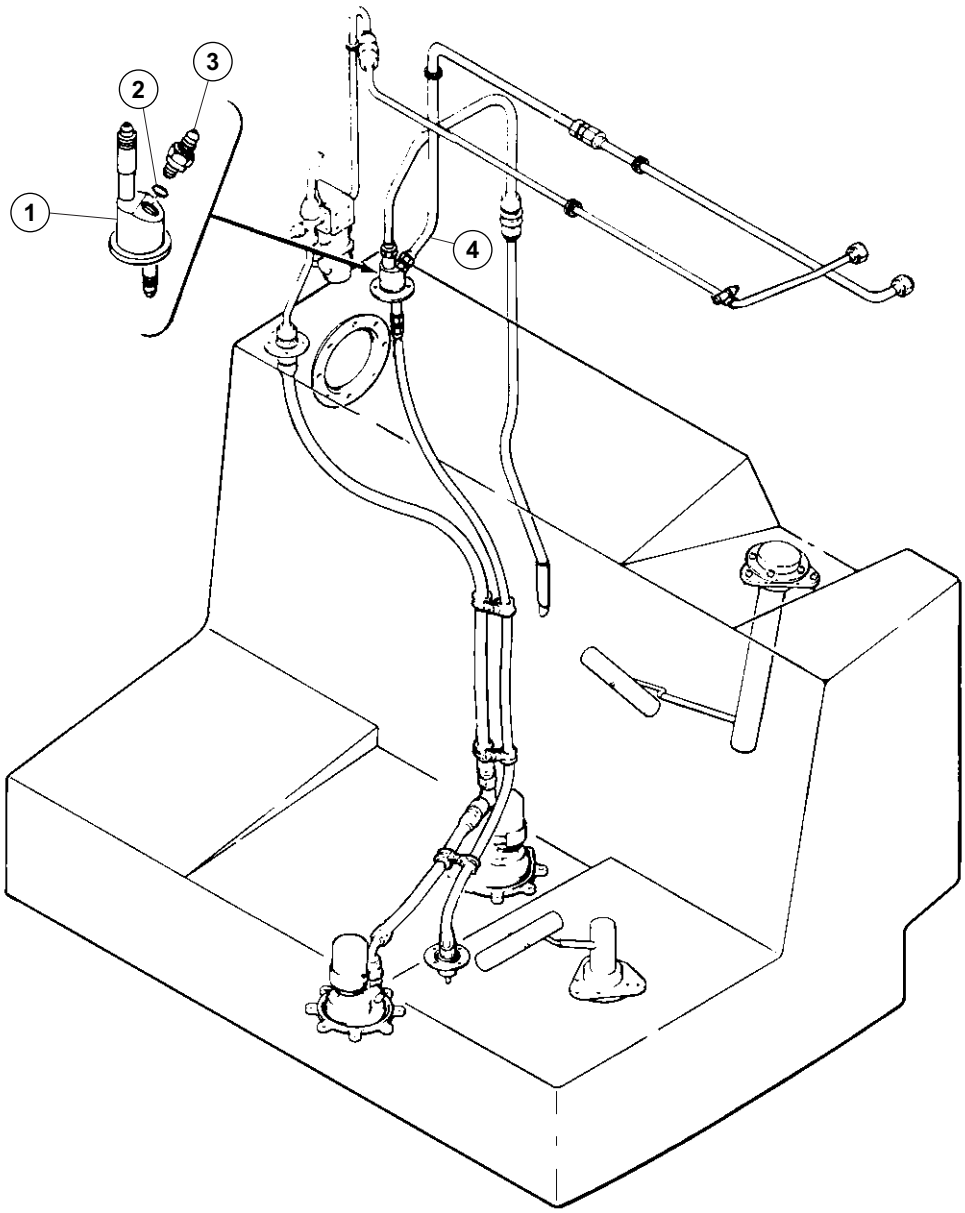

S/N 004 THROUGH 2123
POST ASB 206-05-103

1. **Fuel vent/purge fitting**
2. **Packing**
3. **Filter (213-593)**
4. **Tube assembly**

206AB_MM_05_0002

Figure 5-3. 24-Month Fuel Vent/Purge Fitting Filter Inspection

SCHEDULED INSPECTIONS

5-36. 300 HOURS OR 6 MONTHS OF COMPONENT OPERATION

DATA REFERENCE	INSPECTION TASK DESCRIPTION	INITIAL MECH	INITIAL OTHER
	DATE: _____ **W.O.** _____ **FACILITY:** _____ **HELICOPTER S/N:** _____ **REGISTRY NO.:** _____ **TOTAL TIME:** _____ **SIGNATURE:** _____		
Chapter 63 Chapter 12, BHT-206B3-CR&O	**MAIN DRIVESHAFT (206-040-100-ALL)** Inspect inner and outer coupling teeth splines for wear and corrosion, boot for condition, shaft for damage and corrosion. Inspection is to be accomplished concurrently with lubrication requirements.		

SCHEDULED INSPECTIONS

5-37. 600 HOURS OF COMPONENT OPERATION

DATA REFERENCE	INSPECTION TASK DESCRIPTION	INITIAL MECH	INITIAL OTHER
	DATE: _____ **W.O.** _____ **FACILITY:** _____ **HELICOPTER S/N:** _____ **REGISTRY NO.:** _____ **TOTAL TIME:** _____ **SIGNATURE:** _____ **NOTE** If all five of the following modifications have been carried out on transmission 206-040-002-005, this 600-hour inspection is not required. Refer to the 1200 hours of component operation scheduled inspection (paragraph 5-39). **NOTE** Transmissions delivered, which were marked CHG instead of MOD on data plate, are to be considered as having modification completed. MOD 1: First line of data plate. Transmission sun gear 206-040-123-003 with shaft 206-040-040-003. (refer to SL 206A-30). MOD 2: Second line of data plate. Pinion 206-040-035-007 (refer to SL 206A-112). MOD 3: Third line of data plate. Installation of top case 206-040-151-009. MOD 4: Fourth line of data plate. Heavy duty spider 206-040-080-003 with three longer shafts 206-040-043-005 (refer to SB 206A-14).		

SCHEDULED INSPECTIONS

5-37. 600 HOURS OF COMPONENT OPERATION (CONT)

DATA REFERENCE	INSPECTION TASK DESCRIPTION	INITIAL MECH	INITIAL OTHER
	MOD 5: Fifth line of data plate. Longer magnetic drain plug B-148 or chip detector B-3228 (refer to AL 206A-58 or SL 206A-133).		
	TRANSMISSION (206-040-002-005)		
	SUN GEAR AND PINION BEARINGS		
Chapter 63	**1.** Remove transmission.		
BHT-206A/B-M&O	**2.** Remove top case. Mast assembly may be left attached to top case unless top case is to be inspected.		
	CAUTION HANDLE PLANETARY ASSEMBLY WITH CAUTION TO AVOID TILTING OF PLANET GEARS AND SPILLING OF SPHERICAL ROLLERS. IF PLANET ASSEMBLY BECOMES TILTED, DO NO FORCE TO STRAIGHTEN; ROTATE PLANET GENTLY TO STRAIGHTEN. IF PLANET WILL NOT TURN FREELY, ONE OR MORE ROLLERS MAY HAVE SHIFTED FROM PROPER POSITION; PRESS ROLLERS TOWARD CENTER OF PLANET WITH FINGERS TO FREE ASSEMBLY. (FORCING ASSEMBLY TO STRAIGHTEN CAN BRINNEL THE INNER RACE.)		
	3. Remove internal planetary gear.		
BHT-206A/B-M&O	**4.** Remove planetary assembly and sun gear as one assembly. Inspect planetary assembly.		
	a. Inspect sun gear as follows:		
	(1) Visually inspect for general condition.		
	(2) Perform over pins dimensional inspection.		

SCHEDULED INSPECTIONS

5-37. 600 HOURS OF COMPONENT OPERATION (CONT)

DATA REFERENCE	INSPECTION TASK DESCRIPTION	INITIAL MECH	INITIAL OTHER
	(3) If over pins dimensions is greater that REPLACE dimension allowed, inspect gear teeth of sun and planetary gears, and if acceptable, the assembly may re reinstalled. If over pins dimension is less than REPLACE dimensions allowed, replace sun gear. **b.** Inspect pinion bearing assemblies as follows: **(1)** Visually inspect gear for chipped, broken, or worn teeth. **(2)** Check bearing surfaces of rollers, inner race, and outer race for chips, cracks, nicks, brinelling, spalling, or corrosion. **CAUTION** REMOVE ALL SAFETY WIRE AND TAPE. ENSURE PARTS DO NOT DROP INTO TRANSMISSION CASE.		
BHT-206A/B-M&O	**5.** Reassemble transmission and install. **NOTE** If it becomes necessary to replace sun gear for second time due to spline wear, the mating main input gear shaft must also be inspected.		
BHT-206A/B-M&O	**TOP CASE ASSEMBLY** **1.** At time of sun gear inspection, remove mast assembly, oil filler cap and vent assembly, split spacer ring in ring gear spline relief groove, and the oil jet. **2.** Fluorescent penetrant inspect top case in area of ring gear spline tooth roots for indications of cracks. If cracks are found, part must be replaced. It is not necessary to strip paint from exterior of case. Use of dye-check is not recommended.		

SCHEDULED INSPECTIONS

5-37. 600 HOURS OF COMPONENT OPERATION (CONT)

DATA REFERENCE	INSPECTION TASK DESCRIPTION	INITIAL MECH	INITIAL OTHER
	3. Determine amount of wear of top case involute spline. If dimension measured between pins is greater than maximum, replace top case. **4.** On reassembly, ensure all inspection compound has been removed from inside surfaces, internal oil passages, and oil fitting bosses. **5.** Reassemble transmission.		

SCHEDULED INSPECTIONS

5-38. 600 HOURS OR 12 MONTHS OF COMPONENT OPERATION

DATA REFERENCE	INSPECTION TASK DESCRIPTION	INITIAL MECH	INITIAL OTHER
	DATE: _____ **W.O.** _____ **FACILITY:** _____ **HELICOPTER S/N:** _____ **REGISTRY NO.:** _____ **TOTAL TIME:** _____ **SIGNATURE:** _____ **TAIL ROTOR CONTROL TUBE (WITHOUT NYLATRON SLEEVES)** **1.** Remove and inspect tail rotor control tube for wear at the five areas where tube contacts tailboom fairleads as follows: **a.** To gain access to control tube, remove tail rotor gearbox fairing and access panel on right side of aft fuselage adjacent to tailboom. **b.** Remove attachment bolts at each end of control tube through aft end of tailboom and inspect for wear at five areas where tube contacts fairleads. **c.** To determine amount of wear at each location, proceed as follows: **(1)** Measure diameter of tube just forward and aft of each worn area. Make all measurements in the same plane. **(2)** Measure tube diameter in worn area and compare measurements with those taken in step (1). **(3)** If wear does not extend through tube finish, reinstall tube. If wear in any area extends through dry film lubricant (black color) and the anodize (brown color), but it is not in excess of 0.004 inch (0.01 mm) on one side, tube may be rotated 180° and reinstalled. If wear extends completely around tube and does not exceed 0.004 inch (0.01 mm) on any side, reinstall tube assembly end for end.		

SCHEDULED INSPECTIONS

5-38. 600 HOURS OR 12 MONTHS OF COMPONENT OPERATION (CONT)

DATA REFERENCE	INSPECTION TASK DESCRIPTION	INITIAL MECH	INITIAL OTHER
	(4) If wear is found in any one area in excess of 0.004 inch (0.01 mm) on any side, remove the assembly from service.		
Chapter 67	**2.** Install control tube, parts, and panels that were removed.		
Chapter 63	**MAIN DRIVESHAFT (206-040-015-ALL)**		
Chapter 12, BHT-206B3-CR&O, Chapter 63,	Inspect inner and outer coupling teeth splines for wear and corrosion, boot for condition, and shaft for damage and corrosion. Inspection is to be accomplished concurrently with lubrication requirements.		

SCHEDULED INSPECTIONS

5-39. 1200 HOURS OF COMPONENT OPERATION

DATA REFERENCE	INSPECTION TASK DESCRIPTION	INITIAL	MECH INITIAL
	DATE: _____ **W.O.** _____ **FACILITY:** _____ **HELICOPTER S/N:** _____ **REGISTRY NO.:** _____ **TOTAL TIME:** _____ **SIGNATURE:** _____		
BHT-206B3-CR&O, Chapter 62	**MAIN ROTOR HUB ASSEMBLY** **NOTE** Applicable only to main rotor hub 206-011-100-127 and subsequent with yoke 206-011-149-105 installed. **NOTE** For main rotor hub assemblies which were greased with high pressure grease (C-172) during and since last overhaul or since new, trunnion and pillow blocks do not need to be removed for inspection prior to overhaul. **1.** Inspect yoke and trunnion bearing surfaces for brinelling. **2.** Inspect yoke, latch bolts, strap pins, strap fittings, trunnion, pillow blocks, grips, and pitch horns for corrosion. **3.** Visually inspect all hub components for excessive wear or damage.		

SCHEDULED INSPECTIONS

5-39. 1200 HOURS OF COMPONENT OPERATION (CONT)

DATA REFERENCE	INSPECTION TASK DESCRIPTION	INITIAL	MECH INITIAL
BHT-206A/B-M&O	**TRANSMISSION (206-040-002-005, -013, AND -015)** **NOTE** Transmissions 206-040-002-005, -013, and -015 with four pinion planetary (Post TB 206-75-12) and with two main case electric chip detectors with cockpit warning light connected and operational, do not require this inspection. Refer to the 1500 hours of component operation scheduled inspection (paragraph 5-41). **NOTE** The 1200 hours of component operation inspection is applicable to transmission 206-040-002-005 when modifications 1 through 5 have been complied with and completion confirmed by modification number on transmission data plate (refer to paragraph 5-37). In addition, transmissions 206-040-002-005, -013, and -015 must have chip detector with warning light installed and operational. **TRANSMISSION**		
Chapter 63	Remove transmission. **DISASSEMBLY**		
BHT-206A/B-M&O	**1.** Remove top case. **2.** Remove ring gear. **3.** Remove planetary assembly and sun gear as one assembly. **TOP CASE** **1.** Fluorescent penetrant inspect top case in area of ring gear spline tooth roots for indications of cracks. If cracks are found, part must be replaced. It is not necessary to strip paint from exterior of case. Use of dye-check is not recommended.		

SCHEDULED INSPECTIONS

5-39. 1200 HOURS OF COMPONENT OPERATION (CONT)

DATA REFERENCE	INSPECTION TASK DESCRIPTION	INITIAL	MECH INITIAL
	2. Determine amount of wear of top case involute spline. If dimension measured between pins is greater than maximum, replace top case. **3.** On reassembly, ensure all inspection compound has been removed from inside surfaces, internal oil passages, and oil fitting bosses. **PLANETARY RING GEAR** **1.** Visually inspect spline and teeth of gear for chipped, cracked, or worn teeth. Use a fine India stone to dress small nicks, burrs, or scratches from spline and gear teeth. **2.** Where evidence indicates wear or damage, check dimensions of affected parts. **3.** Perform magnetic particle inspection. **PLANETARY ASSEMBLY**		
BHT-206A/B-M&O	Disassemble planetary assembly. **PLANETARY ASSEMBLY INSPECTION**		
Chapter 12	**1.** Parts should be inspected immediately after cleaning and then oiled, using approved lubricating oil. Avoid fingerprints on unoiled surfaces. Exercise care to prevent corrosion of bearing surfaces.		
BHT-206A/B-M&O	**2.** Visually inspect all parts for wear or damage. **3.** Inspect pinion and gear teeth for chipped, broken, or worn teeth. **4.** Inspect bearing retainer for cracks, wear, or damage. **5.** Inspect bearing surfaces of rollers, inner race, outer race (planet gear) for chips, cracks, nicks, brinelling, spalling, or corrosion. **6.** Retain rollers from each side of bearing in a separate plastic bag. Keep shaft, nut, and bearing assembly together, as removed from spider, in plastic bag.		

SCHEDULED INSPECTIONS

5-39. 1200 HOURS OF COMPONENT OPERATION (CONT)

DATA REFERENCE	INSPECTION TASK DESCRIPTION	INITIAL	MECH INITIAL
	7. Inspect parts dimensionally that show evidence of wear or damage.		
	8. Inspect sun gear for gear spline wear.		
	9. Refer to BHT-206A/B-M&O for magnetic particle or fluorescent penetrant inspection criteria.		
	10. Replace all unserviceable parts.		
BHT-206A/B-M&O	**SUN GEAR**		
	1. Visually inspect for general condition.		
	2. Perform over pins dimensional inspection.		
	3. If over pins dimension is greater than REPLACE dimension allowed, inspect gear teeth of sun and planet gears, and if acceptable, the assembly may be reinstalled. If over pins dimension is less than REPLACE dimension allowed, replace sun gear.		
BHT-206A/B-M&O	**REASSEMBLY**		
	1. Reassemble planetary assembly and sun gear.		
	2. Reassemble transmission.		
Chapter 63	**3.** Install transmission.		
	4. Inspect packing and reducer, or filter, at transmission oil pressure regulating valve boss. Install new packing. Replace reducer/filter if worn or damaged.		
Chapter 65	**TAIL ROTOR DRIVESHAFT (LONG SHAFT ASSEMBLY) (206-040-330)**		
	NOTE During visual inspection, pay attention to area where collars 206-040-315 contact shaft 206-040-330 for possible corrosion.		
	1. Remove, disassemble, clean, and visually inspect tail rotor driveshaft		

SCHEDULED INSPECTIONS

5-40. 1200 HOURS OR 24 MONTHS OF COMPONENT OPERATION

DATA REFERENCE	INSPECTION TASK DESCRIPTION	INITIAL MECH	INITIAL OTHER
	DATE: _____ **W.O.** _____ **FACILITY:** _____ **HELICOPTER S/N:** _____ **REGISTRY NO.:** _____ **TOTAL TIME:** _____ **SIGNATURE:** _____		
	TAIL ROTOR CONTROL TUBE (WITH NYLATRON SLEEVES)		
Chapter 67	**1.** Remove tail rotor control tube.		
	2. Inspect tail rotor control tube and nylatron sleeves at five areas where tube contacts fairleads and proceed as follows:		
	a. If nylatron sleeves are worn on one side only, but surface of control tube is unworn, tube may be rolled 180° and reinstalled.		
BHT-206B3-CR&O, Chapter 67	**b.** If nylatron sleeves are worn through, exposing bare surface of control tube, and control tube is worn not in excess of 0.004 inch (0.01 mm) on one side only, replace worn nylatron sleeves.		
	c. If control tube is worn greater than 0.004 inch (0.01 mm) at any point, or if wear extends more than halfway around tube regardless of depth, replace control tube.		
	d. Inspect tube for corrosion. Pay particular attention to bond line at nylatron sleeves.		
Chapter 67	**3.** Install control tube in tailboom. Reinstall tail rotor gearbox fairing and access panel on right side of aft fuselage.		

SCHEDULED INSPECTIONS

5-41. 1500 HOURS OF COMPONENT OPERATION

DATA REFERENCE	INSPECTION TASK DESCRIPTION	INITIAL MECH	INITIAL OTHER
	DATE: _____ **W.O.** _____ **FACILITY:** _____ **HELICOPTER S/N:** _____ **REGISTRY NO.:** _____ **TOTAL TIME:** _____ **SIGNATURE:** _____		
Chapter 63, BHT-206A/B/L-Series-CR&O, Chapter 63	**MAIN ROTOR MAST** **1.** Remove, disassemble, and clean main rotor mast. **2.** Inspect main rotor mast as follows: **a.** Visually inspect mast splines for burrs, nicks, cracks, and wear. Indication of wear requires an over pins dimensional check. **b.** Visually inspect mast inner and outer surfaces for corrosion. Inspect surface protective coatings for condition. **c.** Visually inspect bearing balls and races for pits, erosion, spalling, and brinelling. **3.** Reassemble and install main rotor mast.		

SCHEDULED INSPECTIONS

5-41. 1500 HOURS OF COMPONENT OPERATION (CONT)

DATA REFERENCE	INSPECTION TASK DESCRIPTION	INITIAL MECH	INITIAL OTHER
Chapter 63	**TRANSMISSION** **NOTE** This inspection is applicable to: • Transmissions 206-040-002-005, -013, and -015 with four pinion planetary (Post TB 206-75-12) provided. Two main case electric chip detectors with cockpit warning light are connected and operational. • Transmissions 206-040-002-025, -027, and -029 (Post TB 206-91-137) **NOTE** To increase the inspection interval to 2250 hours or 60 months (paragraph 5-43), transmissions 206-040-002-115, -117 and subsequent must have been operated with DOD-PRF-85734 oil since new or since the last overhaul (Post TB 206-04-179). • Transmissions 204-040-002-115, -117, and subsequent (Pre TB 206-04-179)		
Chapter 63	**1.** Remove transmission.		
	2. Remove mast assembly, oil filter, and housing assembly. Inspect oil filter for debris and metal contamination.		
BHT-206A/B-M&O, BHT-206B3-CR&O, Chapter 63	**3.** Remove top case, planetary, and sun gear.		
	4. Inspect top case, planetary assembly, sun gear, and accessible areas of the gearshaft for condition. Pay particular attention to the splines of the sun gear and gearshaft.		
	5. Install sun gear, planetary, and top case.		
Chapter 63	**6.** Install mast, oil filter, and transmission.		

SCHEDULED INSPECTIONS

5-41. 1500 HOURS OF COMPONENT OPERATION (CONT)

DATA REFERENCE	INSPECTION TASK DESCRIPTION	INITIAL MECH	INITIAL OTHER
	FREEWHEEL ASSEMBLY		
Chapter 63	**1.** Remove freewheel assembly.		
BHT-206A/B/L-Series-CR&O, Chapter 63	**2.** Disassemble the freewheel assembly to the extent necessary to perform a visual inspection of the clutch assembly, inner shaft, and outer shaft. It is not necessary to remove the thrust bearing from the outer shaft. Remove all sealant and clean all parts. The stripping of paint is not required.		
	3. Visually inspect clutch assembly, inner and outer race shaft assemblies, and bearings for serviceability.		
	4. Assemble freewheel assembly.		
Chapter 63	**5.** Install freewheel assembly.		

SCHEDULED INSPECTIONS

5-42. 1500 HOURS OF COMPONENT OPERATION AND EVERY 50 HOURS THEREAFTER

DATA REFERENCE	INSPECTION TASK DESCRIPTION	INITIAL MECH	INITIAL OTHER
	DATE: _____ **W.O.** _____ **FACILITY:** _____ **HELICOPTER S/N:** _____ **REGISTRY NO.:** _____ **TOTAL TIME:** _____ **SIGNATURE:** _____		
Chapter 62, ASB 206-93-74	**SWASHPLATE SUPPORT (206-010-452-001, -005, AND -109)** **NOTE** If windy conditions prevail, secure blades with tie-down to prevent excessive main rotor flapping. **1.** Thoroughly clean swashplate support base area with drycleaning solvent (C-304) to remove all dirt, grease, and oil residue, then wipe dry. Visually inspect full circumference of fillet radius for cracks with a 10X magnifying glass. Pay particular attention to aft side of swashplate support assembly. **2.** If after accomplishment of step 1 a crack is suspected, carry out further inspection by dye penetrant inspection method (BHT-ALL-SPM, Chapter 6). Paint finish may be removed as required in suspected area.		

SCHEDULED INSPECTIONS

5-43. 2250 HOURS OR 60 MONTHS OF COMPONENT OPERATION

DATA REFERENCE	INSPECTION TASK DESCRIPTION	INITIAL MECH	INITIAL OTHER
	DATE: _____ **W.O.** _____ **FACILITY:** _____ **HELICOPTER S/N:** _____ **REGISTRY NO.:** _____ **TOTAL TIME:** _____ **SIGNATURE:** _____		
	<u>TRANSMISSION</u> **NOTE** This inspection is only applicable to transmission assemblies 206-040-002-115, -117 and subsequent that have been operating with DOD-PRF-85734 oil since new or since last overhaul (TB 206-04-179). If these transmissions have been operated with MIL-PRF-23699 or MIL-PRF-7808 oil, the 1500 Hours of Component Operation scheduled inspection applies (paragraph 5-41).		
Chapter 63	**1.** If installed on the helicopter, remove the transmission assembly.		
	2. Remove the mast and swashplate assembly from the transmission assembly.		
	3. Inspect oil filter for debris and metal contamination.		
BHT-206B3-CR&O, Chapter 63	**4.** Remove the transmission top case, the planetary assembly, and the sun gear.		
	5. Visually examine all removed components for condition.		
	6. Insert a mirror between the spiral bevel gear edge and the lower case and use a bright light to examine the spiral bevel gear, input pinion gears, and surrounding areas for condition.		

SCHEDULED INSPECTIONS

5-43. 2250 HOURS OR 60 MONTHS OF COMPONENT OPERATION (CONT)

DATA REFERENCE	INSPECTION TASK DESCRIPTION	INITIAL MECH	INITIAL OTHER
	7. Reassemble the transmission.		
Chapter 63	**8.** Install the mast and swashplate assembly into the transmission assembly.		
	9. Apply sealant, primer, and paint to the required areas.		
	10. Install the transmission assembly into the helicopter.		
Chapter 12	**11.** Service the transmission with oil (DOD-PRF-85734).		

SCHEDULED INSPECTIONS

5-44. 3000 HOURS OF COMPONENT OPERATION

DATA REFERENCE	INSPECTION TASK DESCRIPTION	INITIAL MECH	INITIAL OTHER
	DATE: _____ **W.O.** _____ **FACILITY:** _____ **HELICOPTER S/N:** _____ **REGISTRY NO.:** _____ **TOTAL TIME:** _____ **SIGNATURE:** _____		
BHT-206B3-CR&O	**TAIL ROTOR GEARBOX** **NOTE** For the gearbox 206-040-402, this inspection may be accomplished concurrently with the duplex bearing 206-040-410-003, -005, -101 or subsequent replacement at 3000 hours. **1.** Perform backlash check of the gearbox prior to disassembly. Backlash shall be 0.003 to 0.011 inch (0.08 to 0.28 mm) and shall not vary more than 0.002 inch (0.05 mm) when measured at three different locations. Record backlash for later reference. **NOTE** If this inspection is being done in conjunction with replacement of bearing 206-040-410-003, -005, -101 or subsequent in gearbox 206-040-402-003, removal of input pinion assembly is not required. Remove output cap, output shaft, and duplex bearing 206-040-410-003, -005, -101 or subsequent after complying with step 1. **2.** Remove input pinion and bearings. Remove output cap and oil level sight glass.		

SCHEDULED INSPECTIONS

5-44. 3000 HOURS OF COMPONENT OPERATION (CONT)

DATA REFERENCE	INSPECTION TASK DESCRIPTION	INITIAL MECH	INITIAL OTHER
	3. Inspect spiral bevel gear and input pinion gear for corrosion and chipped, broken, or worn gear teeth. Inspect gear wear patterns. **4.** Visually inspect accessible areas of input pinion duplex bearing, input pinion roller alignment bearing, and output shaft roller alignment bearing and race for roughness, spalling, scoring, pitting, flaking, broken or damaged retainers, and for evidence of overheating and corrosion. **5.** Visually inspect studs and dowel pins in case assembly for security and damage. Replace damaged studs and/or dowel pins. **6.** Inspect accessible areas of case and output cap for corrosion and damage. **7.** Inspect sight glass for cracking, crazing, or any condition that may obscure level or color of oil. Inspect oil level indicator for discoloration, peeling paint, or evidence of a plastic film on painted side. Remove plastic film if present. **8.** Reassemble gearbox. Exercise caution when inserting input pinion assembly, if previously removed, to ensure proper gear mesh with spiral bevel gear. **9.** Check gearbox backlash. Measured values shall be within 0.001 inch (0.03 mm) of those obtained in step 1. **NOTE** If input pinion and spiral bevel gear were replaced at this time, backlash figures may not fall within 0.001 inch (0.03 mm) of those obtained in step 1. Backlash shall, however, fall within overhaul limits. **10.** Apply sealant and touch up finish as required.		

5-45. SPECIAL INSPECTIONS

Accomplish the following special inspections on the helicopter (paragraph 5-46 through paragraph 5-50A):

- After fuel system maintenance and/or component change
- 1 to 5 hours after each installation
- 3 to 8 hours after each installation
- 10 to 25 hours after each installation
- 100 hours after each installation
- Freewheel lubrication system

Table 5-4. Special Inspections

COMPONENT	INSPECTION SCHEDULE				
	HOURS AFTER INITIAL INSTALLATION				INITIAL
	1 TO 5 HOURS	3 TO 8 HOURS	10 TO 25 HOURS	100 ±10 HOURS	
Main Rotor Hub Mast Nut Torque Check (paragraph 5-47)	X				
Pillow Block Retention Bolts Torque Check (paragraph 5-48)		X (1)			
Tail Rotor Gearbox Torque Check (paragraph 5-49)			X (2)		
Swashplate Tilt Friction (paragraph 5-49)			X (4)		
Disc Pack Coupling Torque Check (paragraph 5-49)			X		
Power Plant Torque Check (paragraph 5-50)				X (3)	
Tailboom Attachment Torque Check (paragraph 5-50)				X	
Transmission Top Case Torque Check (paragraph 5-50)				X	
Transmission Oil and Oil Filter Replacement (paragraph 5-50)				X	
Fuel System (paragraph 5-46)	Immediately after maintenance or component change (5)				

NOTES:

(1) Retouch corrosion preventive compound and anti-slippage marks as required after torque check. Repeat torque check every 100 flight hours.

(2) Torque check must be repeated every 10 to 25 hours until the torque is stabilized. After torque has stabilized, repeat torque check every 300 flight hours.

(3) If fastener is improperly torqued:
- Inspect nuts and bolt threads, and shank for damage.
- Inspect engine mounts and supporting structure for damage.

(4) Repeat the swashplate tilt friction check every 300 flight hours.

(5) Complete fuel system operational check immediately after fuel system maintenance or component change (paragraph 5-46).

SPECIAL INSPECTIONS

5-46. AFTER FUEL SYSTEM MAINTENANCE AND/OR COMPONENT CHANGE

DATA REFERENCE	INSPECTION TASK DESCRIPTION	INITIAL MECH	INITIAL OTHER
	DATE: _____ W.O. _____ **FACILITY: _____** **HELICOPTER S/N: _____** **REGISTRY NO.: _____** **TOTAL TIME: _____** **SIGNATURE: _____**		
	NOTE Accomplish immediately after fuel system maintenance and/or component change/removal at an adequate maintenance facility.		
	<u>FUEL SYSTEM</u>		
	NOTE Installation and removal of a fuel boost pump cartridge, upper or lower fuel quantity probe, or fuel drain valve does not require this inspection.		
	If fuel system maintenance and/or component change/removal is performed at a site remote from an adequate maintenance facility, accomplish step 1, substep c through substep e, and step 3, or step 2 and step 3, as applicable, prior to flight. Upon return to an adequate maintenance facility, but not to exceed 10 flight hours, accomplish entire inspection.		
Chapter 28	**1.** When maintenance or component change/removal is conducted below top fitting of aft fuel cell immediately following fuel system maintenance and/or major component change/removal (boost pump assembly, check valve, fuel line or hoses), ground run helicopter and check for air and fuel leaks and for proper operation as follows:		
Chapter 12	**a.** Ensure all fuel has been drained from fuel cell.		

SPECIAL INSPECTIONS

5-46. AFTER FUEL SYSTEM MAINTENANCE AND/OR COMPONENT CHANGE (CONT)

DATA REFERENCE	INSPECTION TASK DESCRIPTION	INITIAL MECH	INITIAL OTHER
	b. Service fuel cell with 10 gallons (37.90 L) of fuel.		
BHT-206A-FM-1, BHT-206B-FM-1, BHT-206B3-FM-1	**c.** Perform normal engine starting and run-up checks.		
	d. Set throttle to full open and operate engine at 100% N_2 for a minimum of 2 minutes with both fuel boost pumps off. If flameout or power loss occurs, refer to step 3.		
	e. Perform normal engine shutdown.		
	2. When maintenance and/or component change is conducted above top fitting of fuel cell, immediately following fuel system maintenance and/or component change/removal (fuel pressure transducer, fuel valve, schedule fuel component change/removal fuel line or hose), ground run helicopter and check for air or fuel leaks and for proper operation as follows:		
BHT-206A-FM-1, BHT-206B-FM-1, BHT-206B3-FM-1	**a.** Perform normal engine start and run-up checks.		
	b. Set throttle to full open and operate engine at 100% N_2 for a minimum of 2 minutes with both fuel boost pumps OFF. If flameout or power loss occurs, refer to step 3.		
	3. If flameout or power loss occurs, air is entering engine fuel system or an engine pneumatic leak exists. Malfunction must be corrected before commencing flight operations.		
	a. Verify fuel boost pump; check valve and fuel shutoff valve for proper operation.		
	b. Ensure all hoses and lines are serviceable and do not have cracked flares and that B-nuts are correctly torqued.		
Rolls-Royce 250 Series Operation and Maintenance Manual 5W2 or 10W2	**c.** Purge air from fuel system and accomplish pneumatic leak check.		

SPECIAL INSPECTIONS

5-47. 1 TO 5 HOURS AFTER EACH INSTALLATION

DATA REFERENCE	INSPECTION TASK DESCRIPTION	INITIAL MECH	INITIAL OTHER
	DATE: _____ **W.O.** _____ **FACILITY:** _____ **HELICOPTER S/N:** _____ **REGISTRY NO.:** _____ **TOTAL TIME:** _____ **SIGNATURE:** _____ **MAIN ROTOR** **NOTE** The mast nut torque is considered stabilized when two subsequent torque checks are successful (no rotation of the mast nut).		
Chapter 62 TB 206-07-190	**1.** Torque check main rotor mast nut 250 to 275 foot-pounds (339 to 372 Nm) (TB 206-07-190). **2.** After completion of the first 1 to 5 hours torque check per step 1, do a second torque check of the main rotor mast nut 250 to 275 foot-pounds (339 to 372 Nm) within 15 minutes to 5 hours of flight. **3.** Once the mast nut is stabilized proceed as follows: **a.** Clean the surface of the flap restraint support adjacent to the mast nut, the mast nut serrations and the mast nut lock with a clean cloth dampened with acetone (C-316), MEK (C-309) or equivalent. **b.** Apply a bead of sealant (C-251) to the mating edge of the mast nut serrations and the flap restraint support. Do not allow sealant into the mast nut lock bolt threaded hole in the flat restraint support. **c.** While the sealant is wet install the mast nut lock (Chapter 62). **d.** Smooth the sealant to prevent moisture in any areas.		

SPECIAL INSPECTIONS

5-48. 3 TO 8 HOURS AFTER EACH INSTALLATION

DATA REFERENCE	INSPECTION TASK DESCRIPTION	INITIAL MECH	INITIAL OTHER
	DATE: _____ **W.O.** _____ **FACILITY:** _____ **HELICOPTER S/N:** _____ **REGISTRY NO.:** _____ **TOTAL TIME:** _____ **SIGNATURE:** _____		
ASB 206-97-90	**MAIN ROTOR** **1.** Torque check pillow block retention bolts/nuts 84 to 107 inch-pounds (9.4 to 12 Nm) (ASB 206-97-90). **2.** Check for misalignment of anti-slippage marks.		

SPECIAL INSPECTIONS

5-49. 10 TO 25 HOURS AFTER EACH INSTALLATION

DATA REFERENCE	INSPECTION TASK DESCRIPTION	INITIAL MECH	INITIAL OTHER
	DATE: _____ **W.O.** _____ **FACILITY:** _____ **HELICOPTER S/N:** _____ **REGISTRY NO.:** _____ **TOTAL TIME:** _____ **SIGNATURE:** _____		
	SWASHPLATE ASSEMBLY		
Chapter 62	**1.** Examine swashplate tilt friction every 10 to 25 hours until it is stabilized.		
Chapter 65	**DISC PACK COUPLING**		
	1. Torque check disc pack coupling attaching hardware as follows: **a.** Apply the minimum torque (50 inch-pounds (5.65 Nm)) necessary for the fasteners. If the fasteners do not move, the check is completed. Examine torque seal and apply as necessary. **b.** If the fastener(s) moved, do the steps that follow: **(1)** Remove the affected disc pack coupling and examine the bolts, nuts (minimum tare torque, refer to BHT-ALL-SPM) and washer for condition. Discard damaged parts. **(2)** Examine the disc pack coupling for condition. Discard damaged disc pack coupling. **c.** Install the removed disc pack coupling and repeat torque check after 10 to 25 hours.		

SPECIAL INSPECTIONS

5-49. 10 TO 25 HOURS AFTER EACH INSTALLATION (CONT)

DATA REFERENCE	INSPECTION TASK DESCRIPTION	INITIAL MECH	INITIAL OTHER
Chapter 65	**TAIL ROTOR GEARBOX** **1.** Torque check tail rotor gearbox retaining nuts 50 to 70 inch-pounds (5.6 to 7.9 Nm). Repeat every 10 to 25 hours until torque has stabilized.		

SPECIAL INSPECTIONS

5-50. 100 HOURS AFTER EACH INSTALLATION

DATA REFERENCE	INSPECTION TASK DESCRIPTION	INITIAL MECH	INITIAL OTHER
	DATE: _____ **W.O.** _____ **FACILITY:** _____ **HELICOPTER S/N:** _____ **REGISTRY NO.:** _____ **TOTAL TIME:** _____ **SIGNATURE:** _____		
	POWER PLANT		
Chapter 71, TB 206-13-204	**1.** Torque check engine mount attachment hardware at engine and airframe attachment points. **2.** If fastener is improperly torqued: **a.** Check nuts tare torque, and bolt threads and shanks for damage. **b.** Check engine mounts and supporting structure for damage. **c.** Install new fastener if required, and apply torque. Recheck torque at next 100 hours.		
	TAILBOOM		
	1. Torque check tailboom attachment nuts 360 to 390 inch-pounds (40.67 to 44.06 Nm).		
	TRANSMISSION		
Chapter 63	**1.** Replace oil filter element and oil. Inspect removed element for metal particles. If particles are found, investigate to determine cause.		

SPECIAL INSPECTIONS

5-50. 100 HOURS AFTER EACH INSTALLATION (CONT)

DATA REFERENCE	INSPECTION TASK DESCRIPTION	INITIAL MECH	INITIAL OTHER
	NOTE If a nut is improperly torqued, remove and check tare torque, and replace as required. Recheck torque at next 100 hours. **2.** Check transmission top case stud nuts for torque 50 to 70 inch-pounds (6 to 8 Nm).		
BHT-ALL-SPM	**3.** Touch up paint finish as required.		

SPECIAL INSPECTIONS

5-50A. FREEWHEEL LUBRICATION SYSTEM

DATA REFERENCE	INSPECTION TASK DESCRIPTION	INITIAL MECH	INITIAL OTHER
	DATE: _____ **W.O.** _____ **FACILITY:** _____ **HELICOPTER S/N:** _____ **REGISTRY NO.:** _____ **TOTAL TIME:** _____ **SIGNATURE:** _____ This special inspection is required to make sure that there is no debris or blockage of restrictor 206-040-244-001 or 206-040-254-001 located on the left side of the forward engine firewall. Blockage of the restrictor could cause the freewheel assembly to malfunction. **FREEWHEEL OIL SUPPLY SYSTEM, FILTER (50-075-1) AND RESTRICTOR (206-040-244-001 OR 206-040-254-001)** **WARNING** THE FREEWHEEL OIL SUPPLY SYSTEM INSPECTION MUST BE DONE AFTER ANY OF THE FOLLOWING EVENTS: • Anytime the freewheel oil supply is opened upstream of the restrictor. • The disconnection, replacement, or reconnection of any fitting, hose or component between restrictor 206-040-244-001 or 206-040-254-001, and filter 50-075-1.		
Chapter 63 ASB 206-14-132	**1.** After the post installation and installation leak check, do an inspection and clean the components that follow as per ASB 206-14-132:		

SPECIAL INSPECTIONS

5-50A. FREEWHEEL LUBRICATION SYSTEM (CONT)

DATA REFERENCE	INSPECTION TASK DESCRIPTION	INITIAL MECH	INITIAL OTHER
	• Filter (P/N 50-075-1) • Restrictor (P/N 206-040-244-001 or 206-040-254-001).		

CONDITIONAL INSPECTIONS

5-51. CONDITIONAL INSPECTIONS

Accomplish applicable Conditional Inspection (paragraph 5-52 through paragraph 5-60) of helicopter after:

- Hard Landing
- Sudden Stoppage — Main Rotor
- Sudden Stoppage — Tail Rotor
- Overspeed — Main Rotor
- Overtorque
- Engine Compressor Stall or Surge
- Lightning Strike
- Engine Overtemp
- Pylon Whirl

CONDITIONAL INSPECTIONS

5-52. HARD LANDING

DATA REFERENCE	INSPECTION TASK DESCRIPTION	INITIAL MECH	INITIAL OTHER
	DATE: _____ **W.O.** _____ **FACILITY:** _____ **HELICOPTER S/N:** _____ **REGISTRY NO.:** _____ **TOTAL TIME:** _____ **SIGNATURE:** _____ **HARD LANDING** A hard landing is defined as any incident in which impact of helicopter with ground causes severe pitching of main rotor. Blades involved in this type of hard landing must be thoroughly inspected visually. If no obvious damage is discovered, blades may be retained in service for continued usage. If, on a hard landing, either main rotor blade comes into contact with ground, tailboom, or other foreign object, both main rotor blades are to be regarded as having been involved in a sudden stoppage and must be returned to a blade repair station for inspection. Airframe landing skids and crosstubes will deform and yield under load forces in excess of 2.5 Gs. If cabin fuselage contacts the ground, G forces in the fuselage increase abruptly. If following a hard landing, cabin fuselage is resting on the ground or shows evidence of having touched the ground, it is considered to have sustained a 10 G load. **NOTE** Components removed from helicopter for evaluation following a hard landing shall be evaluated as an interrelated group. Removal records accompanying each component shall cross-reference part and serial numbers of other drive system components removed for evaluation.		

CONDITIONAL INSPECTIONS

5-52. HARD LANDING (CONT)

DATA REFERENCE	INSPECTION TASK DESCRIPTION	INITIAL MECH	INITIAL OTHER
Chapter 32	**1.** Inspect landing gear skid tubes and crosstubes for damage and deflection.		
BHT-ALL-SPM	**2.** Remove riveted or clamped crosstube support and accomplish NDI inspection of forward and aft crosstube.		
Chapter 53	**3.** Inspect crosstube attachment points on fuselage for damage or distortion.		
	4. Check all cowling, fairing and doors for proper fit and alignment. Misaligned cowling, fairing, or doors may indicate a distorted fuselage, resulting in major stresses and damage to components.		
	5. Remove all cowlings and fairings necessary to perform a complete visual inspection.		
Rolls-Royce 250 Series Operation and Maintenance Manual, 5W2 or 10W2	**6.** For engine inspection instructions, refer to the Rolls-Royce 250 Series Operation and Maintenance Manual.		
Chapter 29 and Chapter 67	**7.** Check for leaks in hydraulic system, interference or binding of hydraulic actuator and controls, and for satisfactory operation.		
Chapter 67	**8.** Perform complete visual inspection of the flight control system from pilot controls to main rotor head and check for bent or damaged tubes, bellcranks, and supports. Particular attention should be given to pitch link assemblies swaged ends for cracks and to swashplate pivot sleeve at lever attachment points for damage.		
	a. Remove and inspect suspected control tube for straightness by rolling on a surface plate or with use of a metal straight edge. On fixed control tubes swaged end must be concentric to tube within 0.06 inch (1.5 mm) (TIR). Scrap damaged control tube. If no damage is found, reinstall control tube.		
BHT-206B3-CR&O, Chapter 62	**b.** If visual inspection reveals damage to swashplate and support assembly, accomplish the following:		
	(1) Overhaul swashplate and support assembly.		

CONDITIONAL INSPECTIONS

5-52. HARD LANDING (CONT)

DATA REFERENCE	INSPECTION TASK DESCRIPTION	INITIAL MECH	INITIAL OTHER
BHT-206B3-CR&O, Chapter 62	**(2)** Overhaul the main rotor hub assembly in accordance with the conditional inspection criteria. **(3)** Overhaul drive collar, link, and lever. **(4)** Overhaul all connecting control tubes and scrap all connecting control bolts. **c.** Inspect all bearings for smoothness and axial and radial play. **9.** Inspect drag pin fitting 206-031-509 for damage or distortion. Inspect four studs retaining drag pin fitting for looseness and damage and studs surrounding area on lower case for cracks. **10.** Inspect transmission stop mount 206-031-510, where spike of drag pin fitting fits into plate, for damage or cracks. Check for loose or sheared rivets and check torque of bolts at the following locations: **a.** Eight rivets in stop plate. Four rivets are located on each side of hole. **b.** Two bolts at each end and nine rivets in forward half of circular pattern around stop plate holder. **11.** Inspect stop mount supporting structure and roof shell surrounding area for deformation and cracks. **12.** Inspect structure with a 10X magnifying glass around the transmission mounting points. Particular attention should be given to isolation mount and pylon supports attachment points to the box beam. **13.** Inspect isolation mount for damage.		
BHT-206A/B/L-Series-CR&O, Chapter 63	**14.** If one or more inspection requirements in step 9 through step 13 reveal an unsatisfactory condition, a mast runout inspection shall be performed.		

CONDITIONAL INSPECTIONS

5-52. HARD LANDING (CONT)

DATA REFERENCE	INSPECTION TASK DESCRIPTION	INITIAL MECH	INITIAL OTHER
	15. If damage in any inspection requirements of step 9 through step 13 is noted, the main rotor hub assembly must be overhauled in accordance with the conditional inspection criteria.		
	16. Inspect mast for indentions caused by static stop(s). If mast is damaged from an excessively hard contact with main rotor static stop, scrap mast pole and remove and overhaul the following components to ensure airworthiness:		
Chapter 62	**a.** Main rotor hub assembly in accordance with the conditional inspection criteria.		
Chapter 63	**b.** Transmission assembly		
	c. Main driveshaft assembly		
	d. Isolation mount		
	e. Remove main rotor blades and send to a Bell Helicopter Textron approved blade repair facility for evaluation.		
Chapter 53	**17.** Inspect engine mounts at fuselage attachment points for cracks.		
	18. Inspect tailboom for contact with main rotor blades. If damage is found, accomplish main rotor sudden stoppage inspection.		
Chapter 65	**19.** Inspect oil cooler blower shaft for straightness, and impeller and shaft assembly for balance.		
Chapter 64	**20.** Inspect tail rotor blades for damage. If damage is found, accomplish tail rotor sudden stoppage inspection.		
Chapter 32 and Chapter 53	**21.** Inspect tail skid tube and mounting for damage. Inspect tailboom internally and externally for cracks, distortion, and sheared or loose rivets. Inspect the tailboom attachment points for elongated bolt holes and damaged structure.		
	22. Inspect fuel and oil system for damage. During ground run, check fuel and oil systems for leaks.		

CONDITIONAL INSPECTIONS

5-52. HARD LANDING (CONT)

DATA REFERENCE	INSPECTION TASK DESCRIPTION	INITIAL MECH	INITIAL OTHER
BHT-206A/B-M&O, BHT-206B3-CR&O, BHT-206A/B/L-Series-CR&O	**23.** If damage to fuselage structure or tailboom is such that a major repair alignment in a fixture is required, or if landing gear crosstubes permanent set exceeds limits, remove and overhaul the following components.		
Chapter 62	**a.** Main rotor hub assembly in accordance with the conditional inspection criteria.		
Chapter 67	**b.** Swashplate and support assembly with drive collar, link, and lever		
	c. All control tubes		
	d. Main rotor pitch link assemblies		
Chapter 63	**e.** Transmission and mast assembly		
	f. Main driveshaft		
	g. Freewheel assembly		
Chapter 65	**h.** Tail rotor driveshaft assembly		
	i. Tail rotor gearbox		
	j. Tail rotor hub and blade assembly		
Chapter 63	**k.** Isolation mount		
Chapter 62	**l.** Remove main rotor blade and send to a Bell Helicopter Textron approved blade repair facility for evaluation.		
	m. Replace all control bolts from hydraulic servo actuator to main rotor hub.		
BHT-206A-FM-1, BHT-206B-FM-1, BHT-206B3-FM-1	**24.** Provided no visual damage was found, start engine and check main rotor for evidence of 1/rev vibration and lateral balance while at 100% N_2 flat pitch.		

CONDITIONAL INSPECTIONS

5-53. SUDDEN STOPPAGE/ACCELERATION — MAIN ROTOR — POWER ON OR OFF

DATA REFERENCE	INSPECTION TASK DESCRIPTION	INITIAL MECH	INITIAL OTHER
	DATE: _____ **W.O.** _____ **FACILITY:** _____ **HELICOPTER S/N:** _____ **REGISTRY NO.:** _____ **TOTAL TIME:** _____ **SIGNATURE:** _____		
	Sudden stoppage/acceleration is defined as any rapid deceleration or acceleration of drive system whether caused by seizure within drive system, sudden freewheel clutch engagement, impact of main rotor with the ground or with a foreign object of sufficient inertia to cause rapid deceleration.		
	NOTE Components removed from helicopter for evaluation following a sudden stoppage/acceleration shall be evaluated as an interrelated group. Removal records accompanying each component shall cross-reference part and serial numbers of other drive system components removed for evaluation.		
BHT-206A/B-M&O, BHT-206B3-CR&O	**1.** After sudden stoppage, inspect main rotor blade as follows: **a.** Remove tip cover plate from both main rotor blades. **b.** Inspect blade skin and bonded doublers for visible damage. **c.** Check tip weights. If any movement of tip weights has occurred, blade shall be scrapped. **2.** After sudden stoppage of main rotor, remove both main rotor blades. Send blades to a Bell Helicopter Textron approved repair facility for evaluation.		

CONDITIONAL INSPECTIONS

5-53. SUDDEN STOPPAGE/ACCELERATION — MAIN ROTOR — POWER ON OR OFF (CONT)

DATA REFERENCE	INSPECTION TASK DESCRIPTION	INITIAL MECH	INITIAL OTHER
	3. Remove the following components and visually inspect for evidence of torsional yielding, deformation, cracks, or other obvious damage that would render them non-repairable. Unless otherwise specified, conduct an overhaul of these components. **NOTE** If main rotor mast was severed during main rotor sudden stoppage/acceleration, main rotor hub assembly must be considered unserviceable and scrapped.		
BHT-206B3-CR&O, Chapter 62	**a.** Main rotor hub assembly in accordance with the conditional inspection criteria.		
	NOTE If main rotor mast was severed during a main rotor sudden stoppage/acceleration, the main rotor mast has sustained torsional yielding.		
BHT-206A/B/L-Series -CR&O, Chatper 63	**b.** Mast assembly **(1)** Concurrently with mast assembly overhaul, accomplish the following inspections: **(a)** Check mast for torsional yielding by measuring the offset between the mast splines above and below the main rotor trunnion split cone groove using either of the following methods: • Sliding a 0.1600 inch (4.06 mm) diameter measuring pin across the upper and lower spline • Sliding a straight edge across the upper and lower unworn face of the spline (coast side of the spline)		

CONDITIONAL INSPECTIONS

5-53. SUDDEN STOPPAGE/ACCELERATION — MAIN ROTOR — POWER ON OR OFF (CONT)

DATA REFERENCE	INSPECTION TASK DESCRIPTION	INITIAL MECH	INITIAL OTHER
	NOTE If main rotor mast has evidence of torsional yielding, the mast assembly, transmission assembly, main driveshaft, and freewheel assembly (outer race, inner race, and clutch) shall be considered unserviceable and scrapped. Major damage to the mast assembly other than torsional yielding requires replacement of transmission top case. If transmission top case has to be scrapped, pylon mount spindles and mast bearings shall also be scrapped.		
	(b) Check mast TIR.		
	c. Transmission assembly		
BHT-206B3-CR&O, Chapter 62	**d.** Swashplate assembly		
	e. Replace all control bolts from hydraulic servo actuator to main rotor hub.		
Chapter 67	**f.** All cyclic and collective control tubes from mixing lever to swashplate		
	g. Main rotor pitch link assemblies		
BHT-206A/B/L-Series -CR&O, Chapter 63	**h.** Freewheel assembly		
	i. Main driveshaft assembly		
	j. Inspect transmission restraint and transmission mount system for condition and fuselage attachment points for cracks.		
Chapter 53	**k.** Inspect engine mounts at fuselage attachment points for cracks.		

CONDITIONAL INSPECTIONS

5-53. SUDDEN STOPPAGE/ACCELERATION — MAIN ROTOR — POWER ON OR OFF (CONT)

DATA REFERENCE	INSPECTION TASK DESCRIPTION	INITIAL MECH	INITIAL OTHER
	NOTE If a tail rotor driveshaft has failed as a result of torsional overload, the forward short shaft, the aft short shaft, the fan shaft, the impeller, all hangers, driveshafts, adapters, and disc couplings shall be considered unserviceable and scrapped. Inspect hanger attachment points for cracks and distortion. Overhaul tail rotor gearbox to ensure airworthiness. If a tail rotor driveshaft has been damaged by main rotor strike or damaged other than torsional overload, all tail rotor driveshafts, plus hanger assemblies, adapters, and disc couplings fore and aft of damaged area shall be considered unserviceable and scrapped. Inspect remaining hanger assemblies, adapters, and disc couplings according to step m and step n. Inspect hanger attachment points for cracks and distortion.		
Chapter 65	**l.** Inspect tail rotor driveshafts for condition. If any defect is detected to one driveshaft, scrap all bonded tail rotor driveshafts. If any defect is detected, scrap the defective riveted tail rotor driveshaft. **m.** Inspect steel tail rotor driveshaft and steel adapters for cracks using magnetic particle inspection method. **n.** Inspect tail rotor driveshaft hangers, disc couplings, and aluminum driveshaft adapters using fluorescent penetrant inspection method. **4.** In addition to step l and related notes, all bonded tail rotor driveshafts shall be considered unserviceable and scrapped, if during a sudden stoppage/acceleration inspection, any of the following conditions that are attributable to sudden stoppage/acceleration are noted: • Any impact damage to a main rotor blade leading edge or lower skin, or any main rotor blade skin buckling or tears • Main rotor mast is sheared, power on or off, or with torsional yielding, or Total Indicated Runout (TIR) check exceeds limits		

CONDITIONAL INSPECTIONS

5-53. SUDDEN STOPPAGE/ACCELERATION — MAIN ROTOR — POWER ON OR OFF (CONT)

DATA REFERENCE	INSPECTION TASK DESCRIPTION	INITIAL MECH	INITIAL OTHER
	• Any deformation of any coupling disc that results in gaps between laminates greater than 0.015 inch (0.381 mm) • Structural failure or distortion of any coupling disc bolts • Structural failure or distortion exceeding the specified limits of the tail rotor driveshaft steel or aluminum adapters		
Rolls-Royce 250 Series Operation and Maintenance Manual, 5W2 or 10W2	**5.** Refer to applicable Rolls-Royce 250 Series Operation and Maintenance Manual for sudden stoppage inspection requirements.		

CONDITIONAL INSPECTIONS

5-54. SUDDEN STOPPAGE/ACCELERATION — TAIL ROTOR

DATA REFERENCE	INSPECTION TASK DESCRIPTION	INITIAL MECH	INITIAL OTHER
	DATE: _____ **W.O.** _____ **FACILITY:** _____ **HELICOPTER S/N:** _____ **REGISTRY NO.:** _____ **TOTAL TIME:** _____ **SIGNATURE:** _____ Sudden stoppage is defined as any rapid deceleration or acceleration of drive system whether caused by seizure within helicopter drive system, sudden freewheel clutch engagement, or by contact of tail rotor blades with ground, water, or with a foreign object of sufficient inertia to cause rapid deceleration. **CAUTION** DAMAGE TO TAIL ROTOR BLADE ASSEMBLY COULD BE PRESENT ALTHOUGH IT MAY NOT BE READILY DETECTED BY STANDARD VISUAL, DIMENSIONAL, AND MAGNETIC PARTICLE OR FLUORESCENT PENETRANT INSPECTION METHODS. **NOTE** Components removed from helicopter for evaluation following a sudden stoppage/acceleration shall be evaluated as an interrelated group. Removal records accompanying each component shall cross-reference part and serial numbers of other drive system components removed for evaluation.		
Chapter 64	**1.** Remove and scrap tail rotor hub and blade assembly.		

CONDITIONAL INSPECTIONS

5-54. SUDDEN STOPPAGE/ACCELERATION — TAIL ROTOR (CONT)

DATA REFERENCE	INSPECTION TASK DESCRIPTION	INITIAL MECH	INITIAL OTHER
BHT-206B3-CR&O	**2.** Overhaul the following components: **a.** Tail rotor gearbox assembly **b.** Freewheel assembly **c.** Main driveshaft assembly **d.** Tail rotor pitch change mechanism		
BHT-206B3-CR&O	**3.** Inspect all tail rotor driveshaft, impeller, steel and aluminum adapters, flexible coupling discs, and hangers using magnetic particle or fluorescent penetrant methods. **4.** Visually inspect shafts for evidence of twisting. Check for out of round and Total Indicated Runout (TIR) exceeding specified limits. Inspect bonds between tail rotor driveshaft and bonded adapter for integrity. If any defect is detected, scrap all bonded tail rotor driveshafts. **5.** Inspect tail rotor hanger support at tailboom and fuselage attachment points for cracks. **6.** Inspect tail rotor hanger supports for cracks and distortion. **NOTE** If tail rotor driveshaft has failed as a result of torsional overload, all hangers, driveshafts, adapters, impellers, and disc couplings shall be considered unserviceable and scrapped. Inspect hanger attachment points for cracks and distortion. Ensure airworthiness of tail rotor gearbox by conducting a major overhaul. If a tail rotor driveshaft has been damaged by main rotor strike or damage other than torsional overload, all bonded tail rotor driveshafts, plus hanger assemblies, adapters, and disc couplings fore and aft of damaged area shall be considered unserviceable and scrapped. Inspect remaining hanger assemblies, adapters, and disc couplings using magnetic particle or fluorescent penetrant inspection, whichever is applicable for cracks and distortion.		

CONDITIONAL INSPECTIONS

5-54. SUDDEN STOPPAGE/ACCELERATION — TAIL ROTOR (CONT)

DATA REFERENCE	INSPECTION TASK DESCRIPTION	INITIAL MECH	INITIAL OTHER
	NOTE Step 7, substep a and substep b are not applicable to riveted tail rotor segmented driveshafts.		
BHT-206B3-CR&O	**7.** In addition, all bonded tail rotor driveshafts shall be considered unserviceable and scrapped, if during a sudden stoppage inspection any of the following conditions, which are attributable to sudden stoppage, are noted: **a.** Any impact damage to a tail rotor blade leading edge or skin, or any tail rotor blade skin buckling or tears. **b.** Any deformation of any coupling disc that results in gaps between laminates greater than 0.015 inch (0.38 mm). **c.** Structural failure or distortion of any coupling disc bolts. **d.** Structural failure or distortion exceeding specified limits of tail rotor driveshaft steel or aluminum adapters.		
Chapter 53	**8.** Inspect tailboom area of tail rotor gearbox mounting studs for cracks.		
	9. Inspect four tailboom attachment points for cracks, distortion damage, and security. Check torque on nuts of tailboom attachment bolts.		
BHT-206-SRM-1	**10.** Inspect tailboom internally for cracks, distortion, and loose or missing rivets. Check external skin of tailboom for cracks and waviness. Pay particular attention to area of horizontal stabilizer and attachment points of vertical fin.		
Chapter 53	**11.** Inspect horizontal stabilizer for cracks and looseness.		
	12. Inspect vertical fin for security and overall condition. Check tail skid for condition and security. Check mounting of anti-collision light for security and condition.		
Rolls-Royce 250 Series Operation and Maintenance Manual, 5W2 or 10W2	**13.** Refer to applicable Rolls-Royce 250 Series Operation and Maintenance Manual for sudden stoppage inspection requirements.		

CONDITIONAL INSPECTIONS

5-55. OVERSPEED MAIN ROTOR — 114% OR GREATER

DATA REFERENCE	INSPECTION TASK DESCRIPTION	INITIAL MECH	INITIAL OTHER
	DATE: _____ **W.O.** _____ **FACILITY:** _____ **HELICOPTER S/N:** _____ **REGISTRY NO.:** _____ **TOTAL TIME:** _____ **SIGNATURE:** _____		
BHT-206B3-CR&O	**NOTE** Components removed from a helicopter for evaluation following an overspeed shall be evaluated as an interrelated group. Removal records accompanying each component shall cross-reference part and serial numbers of other drive system components removed for evaluation. For main rotor overspeed above 107 up to 114%, visually inspect main rotor blades and tail rotor blades for skin wrinkles or damage. If damage or wrinkles are detected, accomplish complete overspeed inspection. **1.** If main rotor overspeeds in excess of 114% RPM, proceed with the following: **a.** Discarding of the following items is mandatory: **(1)** Tension/torsion straps **(2)** Inboard strap fittings and pins **(3)** Latch bolts		

CONDITIONAL INSPECTIONS

5-55. OVERSPEED MAIN ROTOR — 114% OR GREATER (CONT)

DATA REFERENCE	INSPECTION TASK DESCRIPTION	INITIAL MECH	INITIAL OTHER
BHT-206B3-CR&O	**b.** Main rotor blades. **(1)** Dimensionally check main rotor blade retention bolt hole for indications of permanent deformation or damage. If inside diameter of bushing in hole is elongated in excess of 0.0015 inch (0.038 mm), remove blade from service and return it to a major overhaul facility for further inspection. Any evident looseness of bushing is cause for blade scrapping. **(2)** Remove tip cap assembly from main rotor blade and inspect tip cap attaching screws for deformation. Any deformation of screws or elongation of mating holes in spar is cause for blade scrapping. **(3)** Visually inspect main rotor blade for skin wrinkles or deformation. If any indication of wrinkles or deformation exist, return blade to a major overhaul facility for evaluation. **(4)** If main rotor blades pass previous inspection, they are acceptable for continued service. **c.** Tail rotor blades. **(1)** If one tail rotor blade of a pair has been damaged badly enough that metal has been torn or any bond plies have separated, then both blades and tail rotor hub must be scrapped. **(2)** If contour of a blade has been damaged slightly (distortion), then both blades and tail rotor hub shall be scrapped. **(3)** If any movement of tip block or root end balance weights has occurred, scrap tail rotor hub assembly and both tail rotor blades. **(4)** If tip block is cracked, scrap tail rotor hub assembly and both tail rotor blades. **(5)** If tail rotor blades pass above inspection requirements and no other discrepancies exist, blades are acceptable for continued service.		

CONDITIONAL INSPECTIONS

5-55. OVERSPEED MAIN ROTOR — 114% OR GREATER (CONT)

DATA REFERENCE	INSPECTION TASK DESCRIPTION	INITIAL MECH	INITIAL OTHER
	d. Overhaul the main rotor hub assembly in accordance with the conditional inspection criteria.		
	e. Overhaul the tail rotor hub assembly.		
BHT-ALL-SPM	**f.** Inspect oil cooler fan impeller for visible distortion, or cracks of brazed vane joints using dye penetrant inspection method.		
Rolls-Royce 250 Series Operation and Maintenance Manual, 5W2 or 10W2	**2.** Refer to applicable Rolls-Royce 250 Series Operation and Maintenance Manual for inspection requirements.		

CONDITIONAL INSPECTIONS

5-56. OVERTORQUE

DATA REFERENCE	INSPECTION TASK DESCRIPTION	INITIAL MECH	INITIAL OTHER
	DATE: _____ **W.O.** _____ **FACILITY:** _____ **HELICOPTER S/N:** _____ **REGISTRY NO.:** _____ **TOTAL TIME:** _____ **SIGNATURE:** _____ **<u>OVERTORQUE — 110 TO 120%</u>** **NOTE** Components removed from a helicopter for evaluation following an overtorque shall be evaluated as an interrelated group. Removal records accompanying each component shall cross-reference part and serial numbers of other drive system components removed for evaluation. **NOTE** If overtorque from 100 to 110% should occur, no inspection is required. **1.** If overtorque from 110 to 120% should occur, perform the following: **a.** Conduct a visual inspection of the following assemblies (installed on the helicopter) for any evidence of damage, deformation, yielding, etc.:		
BHT-206B3-CR&O	**(1)** Main rotor blades and attachments. Blade for skin wrinkles and bond separation. If any indications of wrinkles or deformation exists, send blades to a Bell Helicopter Textron repair facility for evaluation. **(2)** Main rotor hub assembly 1 3 4		

CONDITIONAL INSPECTIONS

5-56. OVERTORQUE (CONT)

DATA REFERENCE	INSPECTION TASK DESCRIPTION	INITIAL MECH	INITIAL OTHER
	(3) Transmission top case 1 4 5 6		
	(4) Transmission mount spindles 1 4		
	(5) Cabin roof and beam at transmission mount support assemblies attachment points 1 4		
	(6) Cabin roof and beam at transmission isolation mount attachment point 1 4		
	(7) Tail rotor hub, blades, and attachments 1 4		
	b. Examine the transmission electric chip detectors for accumulated material.		
	c. Remove, disassemble, and inspect main driveshaft couplings for indications of wear and overheating.		
	CAUTION A QUALIFIED PERSON MUST BE AT THE HELICOPTER CONTROLS DURING THE FOLLOWING PROCEDURE.		
BHT-206A-FM-1, BHT-206B-FM-1, BHT-206B3-FM-1	**d.** Start engine and check main rotor, while in a flat pitch condition, for any evidence of a 1/rev vibration or lateral vibration.		
BHT-206A/B/L-Series-CR&O, Chapter 63	**e.** If one or more of the previous inspection requirements, step a through step d, reveals an unsatisfactory condition, a mast runout inspection shall be performed.		

CONDITIONAL INSPECTIONS

5-56. OVERTORQUE (CONT)

DATA REFERENCE	INSPECTION TASK DESCRIPTION	INITIAL MECH	INITIAL OTHER
Rolls-Royce 250 Series Operation and Maintenance Manual, 5W2 or 10W2	**2.** Refer to applicable Rolls-Royce 250 Series Operation and Maintenance Manual for applicable inspection requirements.		
BHT-206B3-CR&O	**3.** After the first 25 hours following an overtorque, conduct a thorough visual inspection of the following:		
	a. Main rotor blades and attachments		
	b. Main rotor hub assembly		
BHT-206A/B/L-Series-CR&O	**c.** Main rotor mast		
BHT-206A/B-M&O, BHT-206B3-CR&O	**d.** Transmission top case		
	e. Transmission spindles, pylon support links, and deck fittings		
	f. Cabin roof shell and beam at transmission mount attachment points		
	g. Transmission isolation mount attachment points		
	h. Transmission electric chip detectors		
	i. Tail rotor gearbox chip detectors and gearbox attachments		
	j. Tail rotor hub, blades, and attachments		
	<u>OVERTORQUE — ABOVE 120%</u>		
	Overtorque conditional inspection restriction may be changed to 130% and above, provided transmission and tail rotor gearbox are serviced with DOD-L-87534 oil and torque gauge 206-075-739-115 is installed. (Helicopters S/N 4311 and subsequent have torque gauge 206-075-739-115 installed.)		

CONDITIONAL INSPECTIONS

5-56. OVERTORQUE (CONT)

DATA REFERENCE	INSPECTION TASK DESCRIPTION	INITIAL MECH	INITIAL OTHER
	NOTE Components removed from helicopter for evaluation following an overtorque shall be evaluated as an interrelated group. Removal records accompanying each component shall cross-reference part and serial numbers of other drive system components removed for evaluation. The overhaul inspection criteria in specific sections, including limit charts and other pertinent information, shall be used to establish that detail parts in each assembly are dimensionally within limits and have not yielded or become deformed.		
BHT-206A/B-M&O, BHT-206B3-CR&O	**1.** If an overtorque above 120% occurs, accomplish all inspections required for overtorque — 110 to 120% and, in addition, conduct the following inspection: **a.** Main rotor hub. Remove and overhaul in accordance with the conditional inspection criteria. △2 △3 △4		
BHT-206A/B/L-Series-CR&O	**b.** Main rotor mast. Remove and overhaul. △2 △4 △5		
BHT-206A/B-M&O, BHT-206B3-CR&O	**c.** Main transmission. Remove and overhaul. Replace top case of main transmission. During overhaul, inspect gear patterns for shifting and scuffing. △2 △4 △5 △6		
	d. Driveshaft. Remove and overhaul. △2 △4 △7		
	e. Freewheel assembly. Remove and overhaul. △2 △4 △5		
Rolls-Royce 250 Series Operation and Maintenance Manual, 5W2 or 10W2	**2.** Refer to applicable Rolls-Royce 250 Series Operation and Maintenance Manual for applicable inspection requirements.		
BHT-206B3-CR&O	**3.** After the first 25 hours following an overtorque, conduct thorough visual inspection of the following: **a.** Main rotor blades and attachments **b.** Main rotor hub assembly		

CONDITIONAL INSPECTIONS

5-56. OVERTORQUE (CONT)

DATA REFERENCE	INSPECTION TASK DESCRIPTION	INITIAL MECH	INITIAL OTHER
BHT-206A/B/L-Series-CR&O BHT-206A/B-M&O, BHT-206B3-CR&O	**c.** Main rotor mast **d.** Transmission top case **e.** Transmission spindles, pylon support links, and deck fittings **f.** Cabin roof shell and beam at transmission mount attachment points **g.** Transmission isolation mount attachment points **h.** Transmission electric chip detectors **i.** Tail rotor gearbox chip detectors and gearbox attachments **j.** Tail rotor hub, blades, and attachments		

NOTES:

1. Overtorque conditional inspection limit of this item may be changed to 110 to 130% provided the specific conditions are met per the applicable notes.

2. Overtorque conditional inspection limit of this item may be changed to 130% and above provided the specific conditions are met per the applicable notes.

3. If main rotor hub is 206-011-100-127 or subsequent.

4. If 206-075-739-115 torque gauge is installed.

5. If transmission is serviced with DOD-PRF-85734.

6. If top case is installed on transmission 206-040-002-025 and subsequent.

7. If the main driveshaft is 206-040-015-103 or subsequent.

CONDITIONAL INSPECTIONS

5-57. ENGINE COMPRESSOR STALL OR SURGE

DATA REFERENCE	INSPECTION TASK DESCRIPTION	INITIAL MECH	INITIAL OTHER
	DATE: _____ **W.O.** _____ **FACILITY:** _____ **HELICOPTER S/N:** _____ **REGISTRY NO.:** _____ **TOTAL TIME:** _____ **SIGNATURE:** _____ **NOTE** An engine compressor stall or surge can be described as a sharp rumble, a series of loud sharp pops, severe engine vibration, or a rapid rise in Turbine Outlet Temperature (TOT) depending on the severity of stall or surge. When a stall or surge is suspected, follow steps as dictated by reported conditions. **NOTE** The components removed from the helicopter for evaluation following a compressor stall or surge shall be evaluated as a matched group. The records accompanying each component shall cross-reference part and serial numbers of other drive system components removed for evaluation. **1.** Obtain a pilot report of the circumstances related to the suspected compressor stall or surge to determine if it corresponds to one of the following conditions: • If the compressor stall or surge occurred on the ground or in flight at any N_R speed or torque setting, and there was no noticeable yaw of the helicopter, do Part I and Part II of this inspection.		

CONDITIONAL INSPECTIONS

5-57. ENGINE COMPRESSOR STALL OR SURGE (CONT)

DATA REFERENCE	INSPECTION TASK DESCRIPTION	INITIAL MECH	INITIAL OTHER
	• If the compressor stall or surge occurred on the ground or in flight at any N_R speed or torque setting, and there was a noticeable yaw of the helicopter, do Part I, Part II, and Part III of this inspection.		
	PART I: INVESTIGATE CAUSE OF COMPRESSOR STALL OR SURGE		
	POWER PLANT		
Rolls-Royce 250 Series Operation and Maintenance Manual, 5W2 or 10W2	**1.** Examine the induction fairing for blockage. If the induction fairing is found obstructed, refer to the appropriate Rolls-Royce Operation and Maintenance Manual for further maintenance action. If no blockage is found, do step 2.		
	2. Remove the induction fairing and examine the compressor intake area as follows:		
Chapter 71	**a.** Examine the compressor rotor for contamination. If contamination is found, perform a compressor wash.		
Rolls-Royce 250 Series Operation and Maintenance Manual, 5W2 or 10W2	**b.** Inspect the compressor rotor for foreign object damages in accordance with the appropriate Rolls-Royce Operation and Maintenance Manual for proper action.		
	3. If step 1 and step 2 do not reveal an obvious cause for compressor stall or surge, refer to appropriate Rolls-Royce Operation and Maintenance Manual for further maintenance action.		

CONDITIONAL INSPECTIONS

5-57. ENGINE COMPRESSOR STALL OR SURGE (CONT)

DATA REFERENCE	INSPECTION TASK DESCRIPTION	INITIAL MECH	INITIAL OTHER
	NOTE Removal or dismantling of components is not required while performing the following inspection.		
	PART II: INSPECTION FOR COMPRESSOR STALL OR SURGE WITHOUT NOTICEABLE YAW		
Chapter 63 and Chapter 65	**DRIVE SYSTEM**		
	1. Examine the chip detectors of the transmission, freewheel assembly, and the tail rotor gearbox. If the chip detector shows signs of metal particles, perform a serviceability check. Components that fail the serviceability check shall be removed. Make an entry on the applicable components Historical Service Record, and attach a tag and write “THIS COMPONENT WAS REMOVED FROM SERVICE BECAUSE OF A COMPRESSOR STALL/SURGE”. Send the component to an approved facility for overhaul.		
	2. Examine the tail rotor driveshafts for condition and security of attachment.		
	3. Examine the tail rotor disc pack couplings for cracks or gapping greater than 0.015 inch (0.38 mm).		
	4. Examine the tail rotor steel driveshaft and adapters for structural failure or distortion exceeding specified limits.		
	5. Examine the bondlines between adapters and tube of the long tail rotor driveshaft for any evidence of cracks and voids, if installed.		
	6. Examine the bondlines on all bonded tail rotor driveshaft adapters for any evidence of cracks and voids, if installed.		
	7. If any defect is detected in step 2 through step 6, all bonded tail rotor driveshafts shall be considered unserviceable and scrapped.		
	8. Examine the tail rotor driveshaft segments having riveted adapters for condition, if installed.		

CONDITIONAL INSPECTIONS

5-57. ENGINE COMPRESSOR STALL OR SURGE (CONT)

DATA REFERENCE	INSPECTION TASK DESCRIPTION	INITIAL MECH	INITIAL OTHER
	9. Examine the oil cooler shaft and forward short shaft for condition.		
	10. Examine the engine-to-transmission driveshaft for condition.		
	11. If no defects were detected that may have been caused by the compressor stall or surge, all drivetrain components are serviceable.		
Chapter 62 and Chapter 67	**ROTATING CONTROL SYSTEM**		
	1. Examine the swashplate and support assembly, swashplate drive components, the tail rotor pitch change mechanism, and all rotating controls (main and tail). Replace any unserviceable parts as necessary.		
Chapter 64	**TAIL ROTOR HUB AND BLADES**		
	1. Examine the tail rotor hub assembly for condition. If any damage suspected to be related to the compressor stall or surge is found, remove the tail rotor hub assembly. Make an entry on the Historical Service Record, and attach a tag on the tail rotor hub assembly and write "THIS COMPONENT WAS REMOVED FROM SERVICE BECAUSE OF A COMPRESSOR STALL/ SURGE". Send the hub to an approved facility for overhaul.		
	2. Examine the tail rotor blades for condition. If any damage suspected to be related to the compressor stall or surge is found, remove the tail rotor blades. Make an entry on the Historical Service Record, and attach a tag on the tail rotor blade(s) and write "THIS BLADE WAS REMOVED FROM SERVICE BECAUSE OF A COMPRESSOR STALL/SURGE". Send the tail rotor blades assembly to a Bell Helicopter Textron approved rotor blade repair facility for further inspection and repair.		
	3. Examine the tail rotor blade bolts for security of attachment. If damage suspected to be related to the compressor stall or surge is found, discard them.		

CONDITIONAL INSPECTIONS

5-57. ENGINE COMPRESSOR STALL OR SURGE (CONT)

DATA REFERENCE	INSPECTION TASK DESCRIPTION	INITIAL MECH	INITIAL OTHER
	4. If any defect is detected in step 1 through step 3, all bonded tail rotor driveshafts shall be considered unserviceable and scrapped.		
Chapter 62	**MAIN ROTOR HUB AND BLADES** **1.** Examine the main rotor blades for damage. Check for wrinkled skin, delamination, deformation, and cracks. **2.** If any blade has visible damage suspected to be related to the compressor stall or surge, make an entry on the Historical Service Record, and attach a tag on blades and write "THIS BLADE WAS REMOVED FROM SERVICE BECAUSE OF A COMPRESSOR STALL/SURGE". Send the blades to a Bell Helicopter Textron approved rotor blade repair facility for further inspection and repair. **3.** If no defects were detected on any blade, the blades are serviceable. **NOTE** This inspection does not require disassembly or removal from the helicopter. **4.** Examine the main rotor hub for condition. If any damage is suspected to be related to the compressor stall or surge, remove the main rotor hub assembly. Make an entry on the Historical Service Record, and attach a tag on the main rotor hub and write "THIS MAIN ROTOR HUB ASSEMBLY WAS REMOVED FROM SERVICE BECAUSE OF A COMPRESSOR STALL/SURGE". Send the component to a Bell Helicopter Textron approved facility for overhaul. **5.** If no defects were detected on main rotor hub, the main rotor hub is serviceable. **6.** If defects were detected in step 1, step 2, and step 4, discard all bonded tail rotor driveshafts and perform a main rotor sudden stoppage inspection.		

CONDITIONAL INSPECTIONS

5-57. ENGINE COMPRESSOR STALL OR SURGE (CONT)

DATA REFERENCE	INSPECTION TASK DESCRIPTION	INITIAL MECH	INITIAL OTHER
	SPECIAL INSPECTION After 25 hours of operation, examine chip detectors of transmission, freewheel assembly, and tail rotor gearbox. If the chip detector shows signs of metal particles, perform a serviceability check. Components that fail the serviceability check shall be removed. Make an entry on the applicable components Historical Service Record, and attach a tag and write “THIS COMPONENT WAS REMOVED FROM SERVICE BECAUSE OF A COMPRESSOR STALL/SURGE”. Send the component to a Bell Helicopter Textron approved facility for overhaul. **PART III: INSPECTION FOR COMPRESSOR STALL OR SURGE WITH NOTICEABLE YAW** **CAUTION** WHEN A COMPRESSOR STALL OR SURGE WITH NOTICEABLE YAW HAS OCCURRED, DISCARD ALL TAIL ROTOR BONDED DRIVESHAFTS.		
BHT-206B3-CR&O	**ENGINE-TO-TRANSMISSION DRIVESHAFT** **1.** Remove and disassemble the engine-to-transmission driveshaft for condition. **2.** Inspect the inner and outer coupling teeth splines for damage. **3.** If any damage suspected to be related to the compressor stall or surge is found, make an entry on the Historical Service Record, and attach a tag on the driveshaft and write “THIS COMPONENT WAS REMOVED FROM SERVICE BECAUSE OF A COMPRESSOR STALL/SURGE”. Send the engine-to-transmission driveshaft to a Bell Helicopter Textron approved facility for overhaul. **4.** If no defects were detected, return the engine-to-transmission driveshaft to service.		

CONDITIONAL INSPECTIONS

5-57. ENGINE COMPRESSOR STALL OR SURGE (CONT)

DATA REFERENCE	INSPECTION TASK DESCRIPTION	INITIAL MECH	INITIAL OTHER
BHT-206A/B-M&O, BHT206B3-CR&O	**TRANSMISSION ASSEMBLY** **1.** Remove the transmission input pinion and triplex bearing. **2.** Inspect the following gear teeth for scoring and other mechanical damage. **a.** Input pinion gear **b.** Main input driven bevel gear **3.** If any damage suspected to be related to the compressor stall or surge is found, make an entry on the Historical Service Record, and attach a tag on the transmission assembly and write “THIS COMPONENT WAS REMOVED FROM SERVICE BECAUSE OF A COMPRESSOR STALL/SURGE”. Send the component to a Bell Helicopter Textron approved facility for overhaul. **4.** If no defects were detected on the gears, the transmission assembly is serviceable.		
BHT206B3-CR&O	**TAIL ROTOR GEARBOX** **1.** Remove the tail rotor gearbox input pinion. **2.** Inspect the following gear teeth for scoring and other mechanical damage. **a.** Input pinion gear **b.** Spiral bevel gear **3.** If any damage suspected to be related to the compressor stall or surge is found, make an entry on the Historical Service Record, and attach a tag on the tail rotor gearbox and write “THIS COMPONENT WAS REMOVED FROM SERVICE BECAUSE OF A COMPRESSOR STALL/SURGE”. Send the tail rotor gearbox to a Bell Helicopter Textron approved facility for overhaul. **4.** If no defects were detected on the gears, the tail rotor gearbox is serviceable.		

CONDITIONAL INSPECTIONS

5-57. ENGINE COMPRESSOR STALL OR SURGE (CONT)

DATA REFERENCE	INSPECTION TASK DESCRIPTION	INITIAL MECH	INITIAL OTHER
Chapter 53	**FUSELAGE** **1.** Examine the complete tailboom structure for distortion, buckles, cracks in the skin, and sheared or loose rivets. **2.** Inspect tailboom attachment fittings for cracks. **3.** Inspect the vertical fin for condition and security of attachment.		
BHT-206A-FM-1, BHT-206B-FM-1, BHT-206B3-FM-1	**GROUND RUN** **CAUTION** A QUALIFIED PERSON MUST BE AT THE HELICOPTER CONTROLS DURING THE FOLLOWING PROCEDURE.		
Chapter 63 and Chapter 65	**1.** Perform a ground run for a minimum of 30 minutes with the helicopter light on its skids. Remove and examine the chip detectors of the transmission assembly, freewheel assembly, and tail rotor gearbox. **2.** If the chip detector shows signs of metal particles, perform a serviceability check. Components that fail the serviceability check shall be removed. Make an entry on the applicable components Historical Service Record, and attach a tag and write “THIS COMPONENT WAS REMOVED FROM SERVICE BECAUSE OF A COMPRESSOR STALL/SURGE”. Send the component to a Bell Helicopter Textron approved facility for overhaul. **3.** If no metal particles were found, the transmission assembly, freewheel assembly, and/or tail rotor gearbox are serviceable.		

CONDITIONAL INSPECTIONS

5-58. LIGHTNING STRIKE

DATA REFERENCE	INSPECTION TASK DESCRIPTION	INITIAL MECH	INITIAL OTHER
	DATE: _____ **W.O.** _____ **FACILITY:** _____ **HELICOPTER S/N:** _____ **REGISTRY NO.:** _____ **TOTAL TIME:** _____ **SIGNATURE:** _____ **LIGHTNING STRIKE** Because lightning behavior is difficult to predict, conduct a thorough inspection of entire helicopter. Lightning damage may appear as burn marks, heat discoloration, arc marks, or small weld marks (where metal has melted and resolidified). Honeycomb and other composite materials may exhibit delamination. **NOTE** In all of the following instances, if significant damage has been found in any area, inspection shall be expanded in those areas until it extends beyond the zone of damage. Any damage found anywhere on helicopter shall be recorded in detail stating lightning strike as reason for removal. Copies of these records shall be provided along with any component returned or overhauled to assist overhauling facility in evaluating component.		

CONDITIONAL INSPECTIONS

5-58. LIGHTNING STRIKE (CONT)

DATA REFERENCE	INSPECTION TASK DESCRIPTION	INITIAL MECH	INITIAL OTHER
	1. Visually inspect all external surfaces of helicopter. Pay particular attention to main rotor blades and hub, main rotor mast and controls, transmission and mounts, power plant and mounts, main and tail rotor driveshafts, tail rotor gearbox, tail rotor blades and hub, vertical fin and horizontal stabilizer. Inspect landing gear skid tubes, crosstubes, and their fuselage attachment points. Check electrical instruments and systems. Check standby compass for erroneous indications. Remove and overhaul defective and/or damaged electrical instruments and systems. **2.** If visual indications of damage are present, proceed as follows: **NOTE** Evaluate components removed from helicopter following a lightning strike as an interrelated group. Make entries in component records to cross-reference part and serial numbers of other drive system components removed for evaluation. **a.** Remove and visually inspect main rotor blades. Scrap blades if any of the following indications show: **(1)** Inspect blades for signs of burns and arcing at tip cap, root end closure, buffer pads, and blade bolt bushings. Burn marks can be very minute. **(2)** Inspect main rotor blade bonded areas for debonding. **b.** Remove main rotor hub for overhaul. **c.** Remove transmission and mast assembly for overhaul. **d.** Remove main driveshaft and freewheel unit for overhaul. **e.** Inspect tail rotor blades and hub. Scrap blades if indications of burns or debonding are present. Remove tail rotor hub for overhaul.		

CONDITIONAL INSPECTIONS

5-58. LIGHTNING STRIKE (CONT)

DATA REFERENCE	INSPECTION TASK DESCRIPTION	INITIAL MECH	INITIAL OTHER
	f. Remove tail rotor driveshaft bearing hangers and tail rotor gearbox for overhaul.		
	g. Check vertical fin for evidence of burning or debonding.		
	h. Inspect tailboom fitting for indication of arcing burns around mounting points of tail rotor gearbox and vertical fin.		
	NOTE If no visual indications of damage are found, check all ferrous dynamic components by magnetometer with a range no larger than ±5 gauss. Point the arrow within 0.5 inch (12.7 mm) of the component. If parts of any component have a reading that is greater than 1 gauss, degauss these components.		
	3. If no indications of damage are found:		
BHT-206A/B-M&O, BHT-206B3-CR&O	**a.** Remove main rotor grips.		
	(1) Visually inspect needle bearings for signs of electrical arcing, burning, or delamination.		
	(2) Visually check pitch horns and trunnion bearing connections for arcing burns.		
	(3) If indications of arcing or burning are present, overhaul main rotor hub assembly and scrap pitch link and all attaching hardware.		
	(4) If no indications are found, reassemble main rotor hub and return to service.		
	b. Remove main rotor mast assembly. Without removing bearing from mast, inspect visible portions of bearing for signs of electrical arcing or burning. Rotate bearing during inspection. Check bearing for smooth rotation. Visually inspect lower mast bearing race and driving spline on mast for signs of arcing or burning.		

CONDITIONAL INSPECTIONS

5-58. LIGHTNING STRIKE (CONT)

DATA REFERENCE	INSPECTION TASK DESCRIPTION	INITIAL MECH	INITIAL OTHER
BHT-206A/B-M&O, BHT-206B3-CR&O, BHT-206A/B/L-Series-CR&O	**(1)** If indications of arcing, burning, or roughness of bearing are present, remove transmission and mast assembly, and freewheel unit, and return for overhaul. **c.** Remove transmission top case and inspect for entry and exit of lightning strike. Special attention should be given to planetary pinion and sun gear, ring gear, spiral bevel gear, and quill pinion. Rotate all bearings for smooth rotation and damage. **(1)** If indications of arcing, burning, or roughness of bearing are present, remove transmission, mast assembly, and freewheel unit, and return for overhaul. **(2)** If no indications of arcing are found, reassemble transmission and mast assembly, and return to limited service. **(3)** After 5 hours, remove the chip detectors and filter, and inspect for chips. **(a)** If no chip indications are found, return transmission to full service. **(b)** If chip indications are found, remove transmission, mast assembly, and freewheel unit and return for overhaul. **d.** Inspect pylon and transmission mount fittings and engine mounts. **(1)** Visually inspect exterior surfaces for evidence of arcing or burning. Special attention should be given to contact surfaces of transmission and engine to their mounting systems and of mounting systems to airframe. **(2)** If indications of arcing or burning are present, overhaul parts. **e.** Remove output quill assembly from tail rotor gearbox. Visually inspect gear teeth for signs of electrical arcing or burning. Rotate tail rotor mast to check for smooth rotation of bearings.		

CONDITIONAL INSPECTIONS

5-58. LIGHTNING STRIKE (CONT)

DATA REFERENCE	INSPECTION TASK DESCRIPTION	INITIAL MECH	INITIAL OTHER
	(1) If evidence of arcing or burning is found, or if bearings do not rotate smoothly, remove gearbox and return it for overhaul. **(2)** If no indications of damage are found, and if bearings rotate smoothly, reassemble gearbox and return it to limited service. **(3)** After 5 hours, remove chip detector and inspect for chips. **(a)** If no chip indications are found, return gearbox to full service. **(b)** If chip indications are found, return gearbox for overhaul.		
BHT-206B3-CR&O	**f.** Inspect main driveshaft inner and outer couplings for evidence of arcing or burning on all gear teeth. **(1)** If no evidence of arcing is found, reassemble driveshaft and return to service. **(2)** Parts that exhibit arcing or burning shall be scrapped. **(3)** If indications of arcing or burning are present on the main driveshaft or on any component of the tail rotor driveshaft, return the freewheel for overhaul. **g.** Disassemble swashplate and support assembly. Visually inspect for evidence of burning or arcing. Inspect bearings for smooth rotation and all hardware for evidence of arcing. **(1)** If indications of arcing or burning are present, or if bearings do not rotate smoothly, overhaul swashplate assembly. Replace the affected hardware. **(2)** If no indications are found, assemble the swashplate assembly and return to service.		

CONDITIONAL INSPECTIONS

5-58. LIGHTNING STRIKE (CONT)

DATA REFERENCE	INSPECTION TASK DESCRIPTION	INITIAL MECH	INITIAL OTHER
	h. Inspect tailboom, horizontal stabilizer, and vertical fin for evidence of arcing, burning, or debonding. Pay particular attention to area around the mounting points for the tail rotor driveshaft hangers and tail rotor gearbox.		
Rolls-Royce 250 Series Operation and Maintenance Manual, 5W2 or 10W2	**i.** Refer to applicable Rolls Royce 250 Series Operation and Maintenance Manual for applicable inspection requirements.		

CONDITIONAL INSPECTIONS

5-59. ENGINE OVERTEMP

DATA REFERENCE	INSPECTION TASK DESCRIPTION	INITIAL MECH	INITIAL OTHER
	DATE: _____ **W.O.** _____ **FACILITY:** _____ **HELICOPTER S/N:** _____ **REGISTRY NO.:** _____ **TOTAL TIME:** _____ **SIGNATURE:** _____		
Rolls-Royce 250 Series Operation and Maintenance Manual, 5W2 or 10W2	**ENGINE OVERTEMP** — Inspect. **1.** Perform hot end inspection of power plant assembly if start or transient turbine outlet temperature limits have been exceeded.		

CONDITIONAL INSPECTIONS

5-60. PYLON WHIRL

DATA REFERENCE	INSPECTION TASK DESCRIPTION	INITIAL MECH	INITIAL OTHER
	DATE: _____ **W.O.** _____ **FACILITY:** _____ **HELICOPTER S/N:** _____ **REGISTRY NO.:** _____ **TOTAL TIME:** _____ **SIGNATURE:** _____ **PYLON WHIRL** **NOTE** Perform pylon whirl inspection following pilot report or evidence of abnormal landing, excessive slope landing, operation in severe turbulence, low rotor RPM during flight (power ON or OFF), rapid and extreme cyclic input, excessive spike knock, or main driveshaft contact with isolation mount.		
Chapter 63	**1.** Do a pylon whirl inspection.		

COMPONENT OVERHAUL SCHEDULE

5-61. COMPONENT OVERHAUL SCHEDULE

The Component Overhaul Schedule (Table 5-5) provides the time interval between overhaul for each applicable helicopter component.

WARNING

DO NOT APPLY TOLERANCES TO PARTS WITH A LIMITED AIRWORTHINESS LIFE (CHAPTER 4).

WARNING

DO NOT EXCEED RETIREMENT LIFE FOR CRITICAL COMPONENTS. REFER TO AIRWORTHINESS LIMITATIONS SCHEDULE (CHAPTER 4).

SOME PARTS INSTALLED AS ORIGINAL EQUIPMENT ON MILITARY HELICOPTERS MAY HAVE A LOWER AIRWORTHINESS LIFE AND/OR OVERHAUL SCHEDULE THAN WHEN USED ON A COMMERCIAL HELICOPTER. CONSEQUENTLY, PARTS THAT HAVE BEEN USED ON MILITARY HELICOPTERS SHOULD NOT BE USED ON COMMERCIAL HELICOPTERS.

CAUTION

OVERHAUL SCHEDULE FOR SOME KIT COMPONENTS AND/OR PARTS IS NOT COVERED IN THIS SCHEDULE. REFER TO APPLICABLE SERVICE INSTRUCTIONS FOR KIT COMPONENTS SCHEDULE.

NOTE

Refer to paragraph 6 for information on inspection and overhaul tolerance.

NOTE

Neither assignment of a time period for overhaul of a component or failure to assign a time period for overhaul of component constitutes warranty of any kind. The only warranty applicable to helicopter and any component is the warranty included in Purchase Agreement for helicopter or component.

The overhaul interval specified for any given part number contained in this Component Overhaul Schedule applies to all successive dash numbers (or suffixes) for that item, unless otherwise specified.

Table 5-5. Component Overhaul Schedule

NOMENCLATURE	PART NUMBER △1	OVERHAUL INTERVAL (HOURS)
MAIN ROTOR CONTROLS		
Swashplate and Support	206-010-450-001	4800 hours
MAIN ROTOR HUB		
Hub Assembly	206-010-100-003	1200 hours
Hub Assembly	206-011-100-001, -003, -005, -007, -011, -017, and -021	1200 hours
Hub Assembly	206-011-100-103 and -107	2400 hours
Hub Assembly	206-011-100-127	△2 1200 hours
Hub Assembly	206-011-100-137	2400 hours
POWER TRAIN		
Mast Assembly	206-040-002-007	3000 hours
Transmission (without electrical chip detector)	206-040-002-005, -013, and -015	1200 hours
Transmission (with electrical chip detector)	206-040-002-005, -013, and -015	2400 hours
Transmission	206-040-002-025	4500 hours
Freewheel Assembly	206-040-230-011	△4 1200 hours
Freewheel Assembly	206-040-270-003	3000 hours
TAIL ROTOR SYSTEM		
Tail Rotor Hub Assembly	206-010-701-013	1200 hours
Tail Rotor Hub Assembly	206-011-801-001	1200 hours
Tail Rotor Hub Assembly	206-011-810-003 and -009	△6
Tail Rotor Hub Assembly	206-011-810-015	2400 hours
Tail Rotor Hub Assembly	206-011-810-119	1200 hours
Tail Rotor Hub Assembly	206-011-810-125, -139, and -153	△7 2500 hours
Tail Rotor Gearbox	206-040-400-003	△3 1200 hours

Table 5-5. Component Overhaul Schedule (Cont)

NOMENCLATURE	PART NUMBER △1	OVERHAUL INTERVAL (HOURS)
TAIL ROTOR SYSTEM (CONT)		
Tail Rotor Gearbox	206-961-401-001	△3 1200 hours
Tail Rotor Gearbox	206-040-402-003	6000 hours
HYDRAULIC SYSTEM		
Hydraulic Pump and Reservoir	206-076-022-001	3600 hours
Hydraulic Servo Actuator	206-076-025-001	2400 hours
Hydraulic Servo Actuator	206-076-031-001, -003, and -005	1200 hours
Hydraulic Servo Actuator	206-076-031-007	2400 hours
Hydraulic Servo Actuator	206-076-031-013, -015, -017, -021, -023, -107, and -109	3600 hours
Hydraulic Servo Actuator	HR41103650-007 and -009	2400 hours
Hydraulic Servo Actuator	HR41103750-002, -003, -007, -009, and -017	2400 hours
POWER PLANT		
Rolls-Royce Engine	250-C18	Refer to Rolls-Royce 250-C18 Series Operation and Maintenance Manual, 5W2
	250-C20/-C20B/-C20J	Refer to Rolls-Royce 250-C20 Series Operation and Maintenance Manual, 10W2
STARTER GENERATORS		
Starter Generator	ALL	1000 hours
CARGO HOOK KIT		
Cargo Hook Unit		△5
EMERGENCY LIGHTWEIGHT FLOAT KIT		
Solenoid Valve	206-373-901-101	△8 6 years

Table 5-5. Component Overhaul Schedule (Cont)

NOMENCLATURE	PART NUMBER △1	OVERHAUL INTERVAL (HOURS)

NOTES:

△1 The operating time specified for overhaul of any given part number listed applies to all successive dash numbers (or suffixes) for that component, unless otherwise specified.

△2 The overhaul interval of the main rotor hub assembly 206-011-100-127 may be increased to 2400 hours provided main rotor yoke 206-011-149-105 is installed.

△3 The overhaul interval of 206-040-400 and 206-961-401 tail rotor gearbox assembly may be increased to 6000 hours with indicating chip detector system installed and operational.

△4 The overhaul interval of 206-040-230 freewheel assembly may be increased to 3000 hours provided clutch assembly CL-41742-1 or CL-42250-1 is installed.

△5 Refer to applicable Service Instruction.

△6 Refer to ASB 206-80-12, dated 9 September 1980.

△7 Refer to TB 206-86-115, dated 27 February 1986.

△8 Refer to TB 206-00-172, dated 18 August 2000.