Bell Helicopter
A Textron Company

TECHNICAL BULLETIN 206-15-207
5 January 2015

MODEL AFFECTED: **206B**

SUBJECT: **IMPROVED SEAT RETAINING CLIPS AND UPGRADE OF EXISTING SEAT RETAINING CLIPS SYSTEM, INTRODUCTION OF.**

HELICOPTERS AFFECTED: **Serial numbers 3567 through 4690.**

[Serial numbers 4598 through 4690 that have accomplished ASB 206-11-128 do not have to do **Part I** for the crew seats only. However, **Part I** for the passenger seats as well as **Part II, Part III, Part IV** and **Part V** will need to be accomplished for the remaining passenger seats].

COMPLIANCE: At customer's option.

DESCRIPTION:

Bell Helicopter has developed a seat retaining system that allows for quick and easy removal or installation of all crew and passenger seat bottom cushion assemblies. This system is more robust and will greatly improve ease of access under the seats and accommodate rapid changes from passenger to cargo transport missions. This Technical Bulletin is applicable to deluxe, custom deluxe, and comfort seats (installed in accordance with BHT-206-SI-126 seating configurations).

Part I Crew cabin seat panels and aft passenger seat panel modification
Part II Seat fitting assembly modification and upgrade
Part III Crew and passenger seat bottom assembly modification
Part IV Crew and passenger seat clip restraint installation on seat frame
Part V Crew and passenger seat installation

This bulletin provides instructions to upgrade the existing crew and passenger seat bottom cushion assemblies to the new quick disconnect system.

Approved for public release.

APPROVAL:

The engineering design aspects of this bulletin are Transport Canada Civil Aviation (TCCA) approved.

CONTACT INFO:

For any questions regarding this bulletin, please contact:

Bell Helicopter Product Support Engineering - Light Helicopters
Tel: 450-437-2862 / 1-800-363-8023 / pselight@bh.com

SPECIAL DISCOUNT:

Bell Helicopter would like to encourage incorporation of the new seat retaining clips system. For a limited time, the complete upgrade kit CT-206-15-207A, will be offered at a special price of $ 4, 500.00. The modification kit CT-206-15-207B, will be offered at a special price of $ 300.00. Bell Helicopter will accept orders at this special introductory price until 31 December 2019.

After 31 December 2019, the kits will be available at the normal Bell Helicopter list price. Individual replacement parts may also be ordered at any time at the normal list price.

MANPOWER:

Approximately 20.0 man-hours are required to complete this bulletin. This estimate is based on hands-on time, and may vary with personnel and facilities available.

WARRANTY:

There is no warranty credit applicable for parts or labor associated with this bulletin.

Required Material:
The following material is required for the accomplishment of this bulletin and may be obtained through your Bell Helicopter Textron Supply Center. Order applicable modification kit:

For Model 206B3 S/N 3567 through 4597, order CT-206-15-207A kit which contains:

Part Number	Nomenclature	Qty	Note
407-030-021-133	Crew Seat Fitting Assy	2	1
407-030-021-111	Aft Fitting Assy	3	2
407-030-054-101	Clip Restraint	10	3
407-030-055-101	Base Restraint	10	3

Part Number	Nomenclature	Qty	Note
120-225-3R12	Screw	10	4
MS24693-S274	Screw	10	4
407-070-723-135	Tube Nylon	5	5
MS21059L3	Nutplate	4	
MS20426AD3-4	Rivet	8	
2640-10781-00	Covering LGT Fabric (15473)	5	

Notes:

1. Model 206B3 S/N 3567 through 4597 to be upgraded by accomplishing **Part II** of this bulletin. Installed on S/N 4598 through 4690 as basic ship and Post ASB 206-11-128.
2. This fitting is already included on Model 206B3 S/N 4598 through 4690 in the aft passenger seat and needs to be upgraded by accomplishing **Part II** of this bulletin.
3. Clip restraints and base restraints are required for crew and aft fitting assembly modification in accordance with **Part II**.
4. Replacement of mounting screws required. These screws are longer in length to fit with the new base restraint of **Part II**, step k and for installation of the seat fitting in **Part V**, step 2 and/or step 3, as applicable.
5. Plastic nylon tube to be cut to applicable length.

For Model 206B3 S/N 4598 through 4690 passenger seats only, order CT-206-15-207B kit which contains the following:

Part Number	Nomenclature	Qty	Note
407-030-054-101	Clip Restraint	6	3
407-030-055-101	Base Restraint	6	3
120-225-3R12	Screw	6	4
MS24693-S274	Screw	6	4

Notes:

1. Post ASB 206-11-128.
2. Fitting 407-030-021-111 is already included on Model 206B3 S/N 4598 through 4690 in the aft passenger seat and needs to be upgraded by accomplishing **Part III** of this bulletin.
3. Clip restraints and base restraints are required for aft passenger area fitting assembly modification in accordance with **Part II**.
4. Replacement of mounting screws required. These screws are longer in length to fit with the new base restraint of **Part II**, step k and for installation of the seat fitting in **Part V**, step 2 and/or step 3, as applicable.

Consumable Material:

The following material is required for accomplishment of this bulletin, but may not require ordering, depending on the operator's consumable material stock levels. This material may be obtained through your Bell Helicopter Textron Supply Center.

Part Number	Nomenclature	Qty	Reference *
2230-00580-00	Epoxy Polyamide Primer, 2 oz Touch-up,Yellow	2 oz	C-204
2010-05988-00	Sealant, TY I-2,CL1,GR A MIL-PRF-81733	1	C-251
2000-01042-00	Adhesive, 50 ML **(Note 1)**	1	C-301
2010-07915-01	Sealant, CLB2, 6 oz w/plunger, AMS	1	C-308
	Acetone, Solvent	AR	C-316
2000-06022-00	Adhesive, Paste-Pint - 299-947-107 Type-1 **(Note 2)**	5 oz	C-324
400 Grit	Abrasive Paper	AR	Commercial
180 Grit	Abrasive Paper	AR	Commercial
120 Grit	Abrasive Paper	AR	Commercial

* C-XXX numbers refer to the consumables list in BHT-ALL-SPM Standard Practices Manual

Notes:

1. Quantity one included in the kit.
2. Adhesive may or may not be required if the seat cover material requires debonding to fit the clip restraint on the seat frame tubing.

The following items are recommended for application of adhesive 50 ML (C-301). They could be purchased separately through a 3M distributor. See below for more information. (Bell Helicopter does not offer these items.) Refer to the vendor Web site. A description of the items is provided below for reference only.

a. **3M™ Scotch-Weld™ EPX™ Helical Mixing Nozzle fits 1:1 50mL, 2:1 37mL and 3:2 43mL cartridges**

b. **3M™ Scotch-Weld™ EPX™ Plus II Applicator for use with 1:1 50mL, 2:1 37mL, 3:2 43mL, 10:1 35 ML and 10:1 45Ml**

SPECIAL TOOLS:

None required.

WEIGHT AND BALANCE:

	Longitudinal		Lateral*	
Weight	**Arm**	**Moment**	**Arm**	**Moment**
+ 4.4 Lbs	82.4 in.	+ 359 in-Lbs	0.0 in.	0.0 in-Lbs
(+2.0 kgs)	(2093 mm)	(+ 41.4 kg x mm/100)	(0.0 mm)	(0.0 kg x mm/100)

* In lateral calculations, - is left and + is right.

ELECTRICAL LOAD DATA:

Not affected.

REFERENCES:

BHT-206A/B-IPC, Illustrated Parts Breakdown, Chapter 25
BHT-206A/B-MM, Maintenance Manual, Chapter 25
BHT-206-SI-126
ASB 206-11-128
BHT-ALL-SPM

PUBLICATIONS AFFECTED:

BHT-206A/B-IPC, Illustrated Parts Breakdown, Chapter 25
BHT-206A/B-MM, Maintenance Manual, Chapter 25

ACCOMPLISHMENT INSTRUCTIONS:

1. Prepare the helicopter for maintenance as follows:

   a. Remove the crew seat assemblies and the passenger seat bottom cushions from the helicopter.

   b. For easier crew seat manipulation, the seat back cushion may be separated from the seat bottom cushion, as required. Refer to the BHT-206A/B-MM, Chapter 25.

Part I: Crew cabin seat panel modification (S/N 3567 to 4597 only) and modification of aft passenger panel (S/N 3567 to 4690) as follows:

   a. Remove the existing attaching hardware (1, Figure 1, Detail A) from the crew seat panels (2).

   b. Remove the seat panels (2). Remove the eye bolts (3), nuts, and washers at station 59.00. Discard the removed hardware.

c. Inspect the seat panels (2) for presence of holes and/or screws and nutplates at station 58.50.

   (1) If screws (4) are installed, remove the screws and discard. As applicable, inspect the existing nutplates for looseness and secure as required. Nutplates may remain installed. Fill open screw holes using sealant (C-308).

d. As required, install two nutplates (6) on each seat panel (5 and 7), station 59.00. Secure the nutplates with a No. 40 drill and countersink four holes for four rivets (View B, Detail C, and View D, Detail E).

   (1) Nut plates may be installed at an angle to maintain 5D minimum pitch with existing nut plate holes and to ensure nutplate do not fall in radius of seat panel dish (recessed) area.

   (2) A single lug nut plates NAS1792A3-1 or equivalent may be used if there is not enough clearance as required in step above. Single lug nut plate is not provided with the kit A.

   (3) Seat panel will need to be replaced if minimum edge distance cannot be maintained.

   (4) For the pilot seat panel (5), refer to Detail C, RBL 9.50, and RBL 18.50.

   (5) For the copilot seat panel (7), refer to Detail E, LBL 15.63, and LBL 6.63.

e. Reinstall the seat panels (2) using previously removed attaching hardware (1).

f. Remove the eye bolts (3) (Detail F) from the passenger seat panel (9) for S/N 3567 to 4597. Remove the seat fitting assemblies (8) for S/N 4598 to 4690 from the passenger seat panel by removing the retaining screw and the washer located on each outboard side of the seat fitting assembly (Detail G).

Part II: Modify crew seat fitting assembly (S/N 3567 to 4597) and aft passenger seat fitting assembly (S/N 3567 to 4690) as follows:

1. Install a seat clip base restraint between the base plate and the plunger fitting as follows:

   a. Remove the screw (6, Figure 2), washer (7), and nut (8) from the seat fitting assembly (2) and the base plate (11) (Sheet 1, Pre TB).

   b. Prepare the mating surfaces of the seat fitting (2) and the base restraint (10) (View A).

-NOTE-

Do not remove the epoxy polyamide primer (C-204).

c. Lightly abrade the epoxy polyamide primer to remove only the gloss finish on the seat fitting (2) bottom surface area to be bonded with a 400-grit abrasive paper.

d. Wipe the mating surfaces of the base restraint (10) clean with acetone (C-316) and dry with cheesecloth. In both directions, radially and axially abrade to remove the gloss finish in order to promote maximum adherence of the base restraint interior surface area with a 120-grit abrasive paper.

e. Wipe clean with acetone (C-316) to thoroughly remove sanding dust from all the faying surfaces using clean cheesecloth or equivalent.

-NOTE-

Pot life of adhesive (C-301) is approximately 30 minutes.

f. Heat the base restraint (10) faying surfaces to 150ºF (66 ºC) for 4 to 5 minutes with a hair dryer. Nylon has moisture absorbing properties; therefore the correct heating of the material will eliminate any possible trace of condensation that may prevent adhesion.

g. Apply adhesive (C-301) approximately 0.010 inch (0.25 mm) thick to the faying surfaces of the seat fitting (2) and the interior surface of the base restraint (10) to ensure a positive squeeze out of adhesive (View B).

h. Position and align the base restraint (10) on the seat fitting (2). Confirm contact between the faying surfaces (View C).

i. Clamp the base restraint (10) and the seat fitting (2) (View D) to maintain a constant contact between all the faying surfaces. While removing the excess squeeze out of adhesive, keep a bead of adhesive around the entire periphery. No edge voids allowed (View C).

j. Repeat step a through step i for the remaining seat fittings (2). Allow to dry for 48 hours at room temperature or refer to the BHT-ALL-SPM, Chapter 13 for accelerated cure times.

k. Once all the individual seat fitting assemblies have cured, position the modified seat fittings (2) on the base plate (11). Install from the bottom of the base plate the MS24693-S274 replacement screw (6), washers (7), and nut (8) inboard side of each seat fitting. Align the slotted ends on the base plate with the slotted ends on the seat fitting. Confirm that the seat fitting is perpendicular to the base plate.

l. Touch up all bare metal surfaces, as required. Refer to the BHT-ALL-SPM, Chapters 3 and 4.

Part III: Modify crew seat bottom cushion assembly (S/N 3567 to 4597) and passenger seat bottom cushion assembly (S/N 3567 to 4690) as follows:

1. Prepare a clean work surface for the modification of the seat bottom assemblies.

-NOTE-

For the following steps, a person with upholstery expertise is recommended.

-NOTE-

To obtain a wrinkle free fit, make note of the material position and the location prior to unbonding the seat frame cover and the fabric.

a. As applicable, remove the four rivets that secure the seat clips (1, Figure 3) to the seat frame (2) by exposing the forward seat end of the seat frame as follows. Discard the existing clips.

(1) Use care when unbonding the forward flap seat fabric (4) from the seat frame (2), cover (3), and foam (5).

(2) Fold back the forward flap seat fabric (4) from the seat frame (2) and the foam (5).

b. As applicable, remove the welded seat clips (1) to the seat frame (2) by exposing the forward seat end of the seat frame as follows. Discard the existing clips.

CAUTION

MAKE SURE NOT TO GRIND INTO TUBE OF SEAT FRAME.

(1) Use care when unbonding the forward flap seat fabric (4) from the seat frame (2), cover (3), and foam (5).

(2) Fold back the forward flap seat fabric (4) from the seat frame (2) and the foam (5).

(3) Cut off larger part of welded seat clips (1).

CAUTION

MAXIMUM ALLOWABLE MATERIAL REMOVAL IS 0.015 INCH (0.381 MM) OFF WALL THICKNESS. MAKE SURE FRAME TEMPERATURE DOES NOT EXCEED 300°F (149°C).

(4) Grind welds of the removed part flush with the outside diameter of the seat frame (2). The maximum width of each grinding area is not to exceed 0.250 inch (6.35 mm). Discard the clips.

(5) Inspect reworked areas as follows:

(a) Make sure no more than 0.015 inch (0.381 mm) of wall thickness was removed.

(b) Compare the rework with the adjacent (un-ground) area using a straight edge and feeler gage or vernier.

(6) Clean ground surface with MEK or equivalent solvent using clean cheese cloth or equivalent.

(7) Touch up the chemical film. Prime all bare aluminum surfaces. Allow the primer to dry at room temperature for 24 hours.

c. If the seat frame has two bonded nylon tubes in the forward area of the seat frame (2) in lieu of the seat clips (1), as mentioned above, go to step 2.

-NOTE-

The seat frame (2) should be discarded if any rivet holes are beyond the 0.250 inch (6.35 mm) diameter tolerance.

d. Inspect the four rivet holes in the seat frame (2) for condition. If a rivet hole is damaged, open to the minimum size required to produce a clean and round hole. It is not acceptable to leave the holes damaged. The maximum acceptable diameter hole is 0.250 inch (6.35 mm).

e. Deburr the rivet holes and remove all sharp edges.

f. Touch up the chemical film. Prime the edges of the rivet holes and all bare aluminum surfaces. Allow the primer to dry at room temperature for 24 hours.

g. Plug the rivet holes in the seat frame (2) with sealant (C-308). Make sure the sealant is flush with the outside diameter of the frame tube. Allow the sealant to dry at room temperature for 24 hours.

2. Remove the two bonded forward nylon tubes (1, Figure 4) located on the forward end of the seat frame (2) as follows:

a. If necessary, unbond the seat covering material (3) to temporarily gain access to the bonded forward nylon tubes (1) located on the forward area of the seat frame (2) (Sheet 1).

CAUTION

During the removal steps of the forward nylon tubes (1), be careful not to grind into the seat frame (2) or the seat covering material (3).

b. Work the forward nylon tubes (1) free with a spatula and discard. As required, use a sanding wheel, as shown, to cut a groove in the nylon tubing. Work the two forward nylon tube halves free with the spatula (Sheet 2).

c. Remove the adhesive from the seat frame (2) forward tubing area (use MEK or equivalent). Solvent must not come in contact with the seat frame covers (4) or the seat covering fabric (3) (Sheet 1).

d. Inspect for rivet holes. If any rivet holes are found, perform above step 1d through step 1g inclusively.

e. Touch up the chemical film. Prime all bare aluminum surfaces. Allow primer to dry at room temperature for 24 hours.

3. Install the protective plastic tube on the aft area of the seat frame assembly (S/N 3567 to 4597) as follows:

   a. As required, protect the seat fabric from adhesive (C-301).

   b. Lightly abrade the mating surfaces of the seat frame (2, Figure 5) area and the inside diameter of the plastic tube (1) with a 400-grit abrasive paper to remove the gloss finish. Do not remove the epoxy polyamide primer.

   c. Cut the plastic tube (1) to length and, as applicable, drill a hole in the plastic tube to match the existing hole in the aft seat frame (Sheet 1, 2). Refer to Table 1 below.

Table 1: Plastic Tube Dimensions

USED ON	VIEW	LENGTH (1)	QTY	DIMENSION C	DIMENSION D	ANGLE X
Crew Seats	A	7.0 inch	2	Seat center line	3.5 Inch	28°
Passenger Seat	B	4.0 inch	3	Seat center line	2.0 Inch	28°

-NOTE-

Cut the plastic tube to length to maintain the seat level and prevent chafing.

   d. Wipe clean with acetone (C-316) to thoroughly remove sanding dust from all the faying surfaces using clean cheesecloth or equivalent.

   e. Apply adhesive (C-301) 0.010 inch (0.254 mm) thick to the faying surfaces of the plastic tube (1) and the seat frame (2).

   f. Locate and position the plastic tube (1) on the seat frame (2). Where rivet holes exist, align the hole in the tube with the hole in the frame (Sheet 1). Refer to Table 1.

   g. Install the plastic tube (1). Clamp into position to make sure that a positive adhesive squeeze-out forms a bead around the entire periphery of the tube. No edge voids allowed. Remove excess adhesive squeeze-out. Allow to dry at room temperature for 48 hours.

   h. Instructions to bond the seat covering back into position are provided in step 7**.**

   i. Go to step 4.

4. Adjust the seat fitting plunger (6, Figure 9) of the modified seat fitting assemblies (2 and 16) with a locally fabricated tool (tube) with an approximate diameter of 0.880 inch (22.35 mm) or comparable to the diameter of a forward frame with nylon covered seat tube. Adjust the seat fitting plunger tension by turning the plunger adjustment screw (7) until the surface of the fabricated tool (tube) contacts the seat fitting plunger face and the plunger spring is fully compressed. Loosen the plunger assembly ½ aft turn, remove the fabricated tool (tube) (Detail B, C and E).

   a. Temporarily install the clip restraints (11) at the same location of the previously removed clips or the plastic tubes from the forward end of the seat cushion forward frames (5) (View A, Detail B for crew and View D, Detail E for passenger).

   b. Temporarily install the modified crew seat fitting assembly (2) on the crew seat panel (View A) and seat fitting assembly (16) on passenger panel (View D) using the replacement screw P/N 120-225-3R12.

5. Temporarily install the removed seats on their original position by pushing down on the seat and snapping into position. Visually verify for the correct mating between the base restraints (12) and the clip restraints (11) (View A, Detail B and View D, Detail E).

   a. As required, press firmly on the seat corners to assist with the clipping of clip restraint to secure the bottom cushion in place.

   b. Adjust the clip restraints (11), as necessary, on the seat frame tube to match with the base restraint (12).

CAUTION

It is imperative to correctly locate the clip restraints on the crew seat frame tubing. Failure to do so will off-center the seat bottom, resulting in an inappropriate fit. This is done by confirming that there are no interferences between the door, controls, or other seat cushions by temporarily installing the seat cushions in the helicopter and to check for fouling prior to bonding of the clip restraints.

   c. Check for interference between the seat cushions, controls, and doors. As required, slide the seat cushion frame to the left or to the right while the base restraint (12) and the clip restraints (11) are locked into position.

   d. Make a mark on each side of the clip restraint (11) with a permanent marker. Identify each modified crew seat fitting assembly (2) with the corresponding seat cushions for the remaining steps of this bulletin.

e. Remove the seat cushions by pulling on the locking tabs of the clip restraints (11) to release the seat cushion from the modified seat fitting assemblies (2 and 16). Remove the modified seat fittings as they will be needed in later steps.

6. Before seat clip restraint final installation, prepare the seat frame surface areas where the clip restraints (1, Figure 6) are to be bonded, as follows (View A and B.)

   a. Lightly abrade the primer between the two marked areas from step 5 d on the seat frame (2) faying surfaces with a 180-grit abrasive paper or finer. Be careful not to remove the frame tube material (View B).

   b. Radially and axially abrade, in both directions, the clip restraint (1) interior surface with a 120-grit abrasive paper. Make sure the gloss is removed to promote maximum adherence (View A).

   c. Wipe clean with acetone (C-316) to thoroughly remove sanding dust from the faying surfaces with clean cheesecloth or equivalent.

7. Prepare the seat frame cover and the fabric material. For seat cushions that have accomplished **Part III**, paragraph 1.a (rivets removal) and 1.b (welded clips removal), proceed as follows:

CAUTION

Do not damage the seat frame with cutting tool.

-NOTE-

Bond the seat frame cover and the seat bottom material at the original locations to obtain a wrinkle free fit.

   a. Sand the seat frame cover material with a 120-grit abrasive paper prior to bonding back into place. Lightly abrade the existing adhesive taking care not to damage the cover material. Wipe the bonding surfaces with a clean cloth moistened with acetone (C-316).

   b. Remove the cured adhesive from the previously removed seat fabric material with cheesecloth moistened with acetone (C-316). It is possible to remove the majority of the cured adhesive without damaging the seat fabric material. As an alternative method, sand the fabric with a 120-grit abrasive paper and then wipe with a cloth moistened with acetone (C-316).

-NOTE-

At this time, the seat clip restraint (3, Figure 7) can be temporarily installed on the forward end of the seat frame (1) to help with the installation of the foam covers (4) and the doublers covers (5). Make sure there is enough clearance between seat covering material and/or covers and seat clips restraint (Sheets 1 through 5).

c. Apply adhesive to the surfaces and bond as follows:

(1) Adhesive (C-324) to be well stirred before use.

-NOTE-

Make sure not to bond the seat clip restraints (3) at this time.

(2) Apply a thin uniform coat of 0.003 to 0.008 inch (0.08 to 0.20 mm) thick to each surface. Two coats are required on the seat fabric surface. Allow approximately 4 minutes drying time between coats.

(3) When the adhesive is no longer wet, position the surfaces to be bonded and then press firmly together to ensure contact.

(4) It is recommended to apply a weight of 10 to 15 pounds (4.53 to 6.79 kg) on the bonding surface with a bag and let cure for 4 hours at room temperature.

d. Make foam covers (4) from the Covering LGT Fabric (15473) and position between the forward frame tube and the seat foam. Bond into position (Sheets 1 and 3).

e. Make seat cover doublers from Covering LGT Fabric (15473) and bond to the inside of the seat fabric (Sheets 2 and 3).

f. Make sure to have a 0.250 inch (6.35mm) minimum hem on all edges of the cut seat fabric. Cut just enough seat cover and fabric to clear the new seat clip restraint (3) in order to engage the seat frame to the new seat clip restraint assemblies. Fold and bond the seat fabric at the tube openings (Sheets 3, 4, and 5).

g. Complete the bonding procedure for all applicable seat cushions.

Part IV: Install seat clip restraint on crew and passenger seat frame as follows:

1. Install the seat clip restraint on the seat frame of the seat bottom cushion as follows:

   a. Adjust the plunger in accordance with **PART III** step 4.

CAUTION

It is imperative to correctly locate the clips on the seat frame tubing. Failure to do so will off-center the seat bottom resulting in an inappropriate fit. If in doubt, confirm the measurements by temporarily installing the seat in the helicopter to see if any fouling with the door or controls occurs prior to bonding.

-NOTE-

Protect the seat fabric from surplus adhesive or surrounding debris during the rework. Before you continue, the seat fitting assembly reworked in **Part II** must be cured and ready to work with per the following steps.

-NOTE-

The long term durability of the bond line between associated parts in the next step is directly related to adequate and acceptable surface preparation.

-NOTE-

Pot life of adhesive (C-301) is approximately 30 minutes.

   b. Wipe the faying surfaces of the clip restraint (1, Figure 8) and the seat frame (2) clean with acetone (C-316) with clean cheesecloth or equivalent.

   c. Heat the clip restraint (1) faying surfaces to 150ºF (66 ºC) for 4 to 5 minutes with a hair dryer. Nylon has moisture absorbing properties, therefore the correct heating of the material will eliminate any possible trace of condensation that may prevent adhesion.

d. Apply adhesive (C-301) approximately 0.010 inch (0.25 mm) thick to the faying surfaces of the clip restraint (1) and the seat frame (2) to ensure a positive squeeze out (View A).

e. Locate and push the clip restraint (1) onto the seat frame (2) in a rolling motion to ease insertion. Ensure positive adhesive squeeze-out to form a continuous bead around the entire periphery of the clip restraint. No edge voids allowed. Remove excess adhesive squeeze-out only if interference is suspected (View B).

f. Immediately position the reworked seat clip base restraint from **Part II** into the clip restraints (1). Center the two clips into position (View C).

g. Temporarily place 0.125 inch (3.18 mm) wooden sticks or equivalent to provide a flat surface in plane with the modified seat fitting base (3) (View D).

h. Turn the seat over on the working surface. Apply a weight of 10 to 15 pounds (4.5 to 6.8 kg) on the forward portion of the seat cushion to ensure positive pressure while the adhesive is curing (View E).

i. Make sure the clip restraints (1) are properly positioned on the seat fitting base (3) and on the seat frame (2) to match with the marked position in accordance with previous **PART III** step 5d and 5e.

j. Allow to dry for 48 hours at room temperature or refer to the BHT-ALL-SPM, Chapter 13 for accelerated cure times.

k. Repeat step a through step h for the remaining seats.

l. Once the adhesive is cured, to separate the seat cushion from the seat fitting assembly, pull the locking tabs of the clip restraints to free the seat cushion from the seat fitting assembly.

Part V: Reassemble seats and install fitting assembly as follows:

1. Reattach the seat back cushion to the seat bottom cushion, as required. Refer to the BHT-206A/B-MM, Chapter 25.

2. Install the modified crew seat fitting assembly (2, Figure 9) on the seat panel (1) with the replacement screws P/N 120-225-3R12.

3. Install the modified passenger seat fitting assembly (16) on the seat panel (1) with replacement screw P/N 120-225-3R12.

4. Push down on the seat and snap into position. Visually verify for the correct mating between the base restraint and the clip restraints. Lift the back end of the bottom cushion a few inches to assist with the clipping of the seat frame on the base restraint locking nipple. Press firmly on the seat corners to secure seats in place. Ensure maximum plunger ball friction and a positive pinch to hold the seat cushions in position. Readjust the seat fitting plunger (6), as required, using the instructions noted in **Part III,** step 4.

5. Verify that the seats are properly positioned and do not interfere with the controls, doors or other seats. If the helicopter is equipped with dual controls, make sure the copilot crew seat does not interfere with the copilot collective stick movement. If interference is noted, the clip restraints may need to be repositioned on the seat frame.

CAUTION

Inform your flight and ground personnel that these clips have been installed and advise them that the clip restraint tabs need to be pulled enough to clear the base plate restraint nipple before pulling upwards to remove the seats.

6. Once complete, the seat frames and the fitting assemblies will be equivalent to the following or field modified to use similar parts, as shown below.

Equivalent to the latest configuration:

Part Number	Nomenclature	Notes
206-072-216-135M	Crew seat bottom cushion	1
206-072-212-107M	Frame, bottom crew seat	1
407-030-021-135M	Crew seat fitting assembly	1
206-072-334-113M	Crew seat bottom cushion	1,2
206-072-333-111M	Frame, bottom crew seat	1,2

Notes:

1. Modified crew seat cushion, frames, and seat fittings for S/N 3567 to 4597. Post ASB 206-11-128 for S/N 4598 to 4690.
2. Applicable to BHT-206-SI-126 only.

Field modified per this Technical Bulletin:

Part Number	**Nomenclature**	**Notes**
206-072-219-115M	Cushion, bottom passenger seat	1,4
206-072-219-119M	Cushion, bottom center passenger seat	2
206-072-217-135M	Frame, bottom passenger seat	3
407-030-021-111M	Aft fitting assembly	2,3

Notes:

1. Modified fittings for S/N 4567 to 4690 for aft passenger seats after accomplishing this bulletin.
2. Aft center seat cushion.
3. All aft seat cushions use the same seat frames.
4. Left and right seat cushions for aft passenger.

7. Make an entry in the logbook and the helicopter historical service records indicating compliance with this Technical Bulletin.

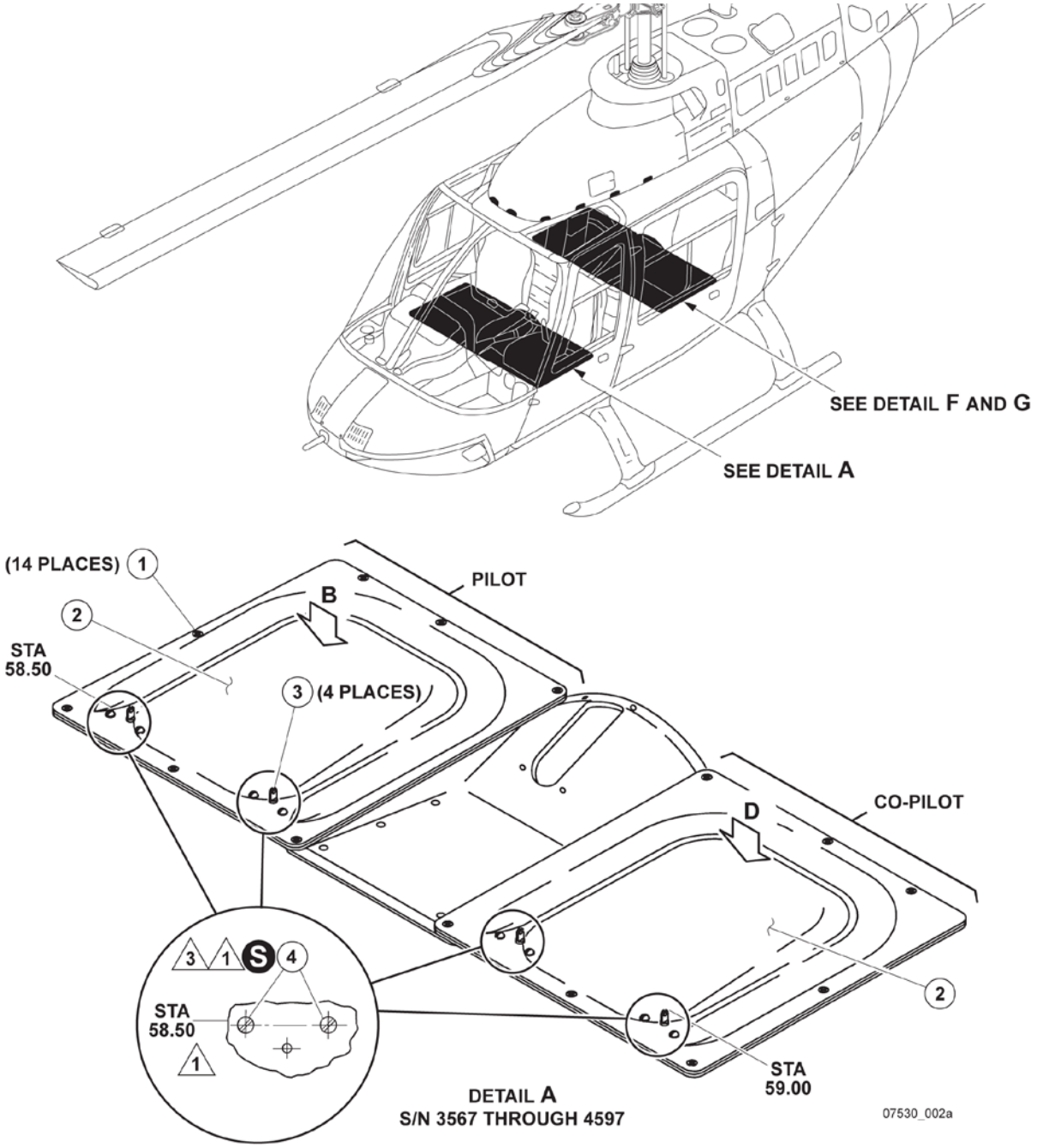

Figure 1 - Crew Seat Panel (Sheet 1 of 4)

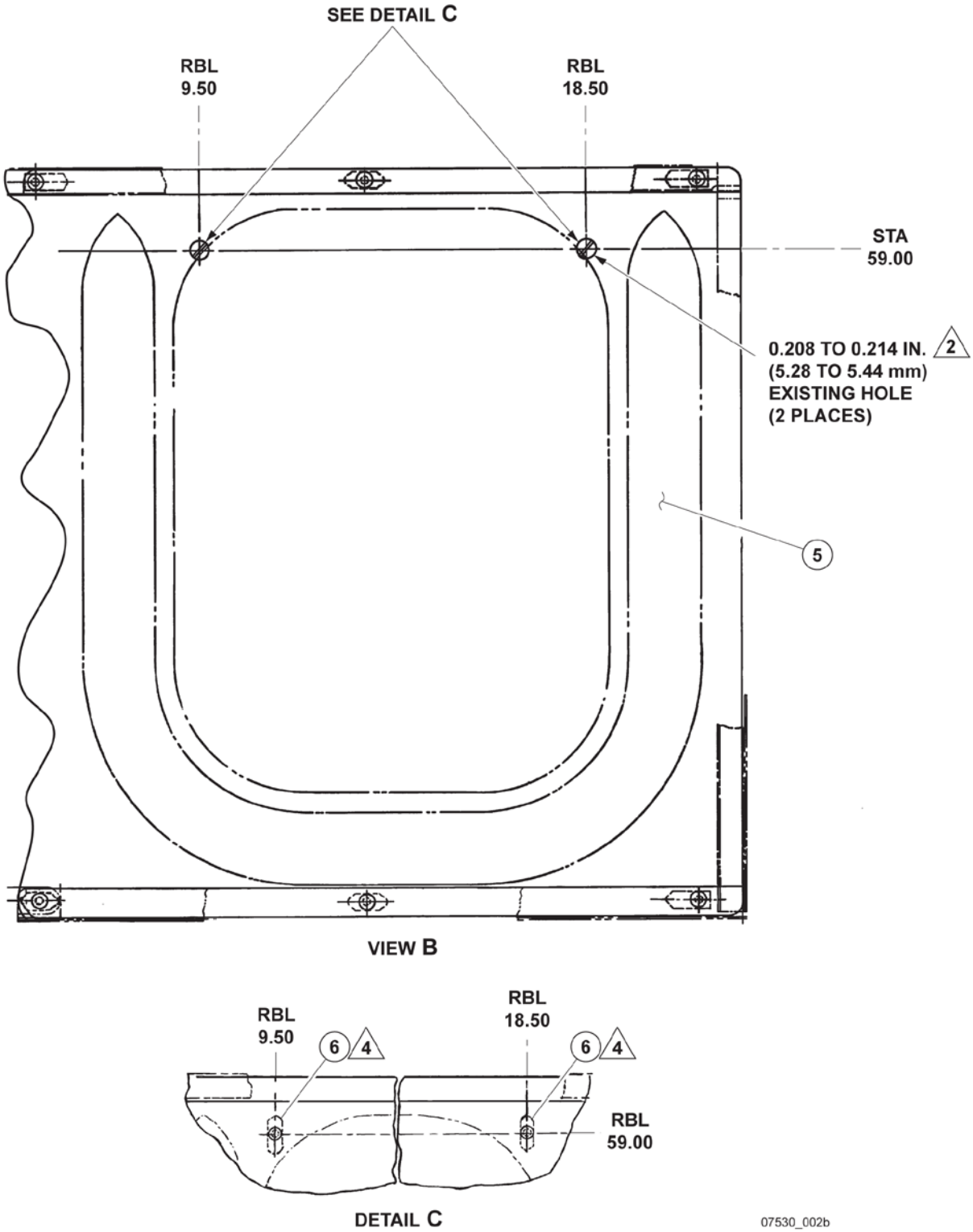

Figure 1 - Crew Seat Panel (Sheet 2 of 4)

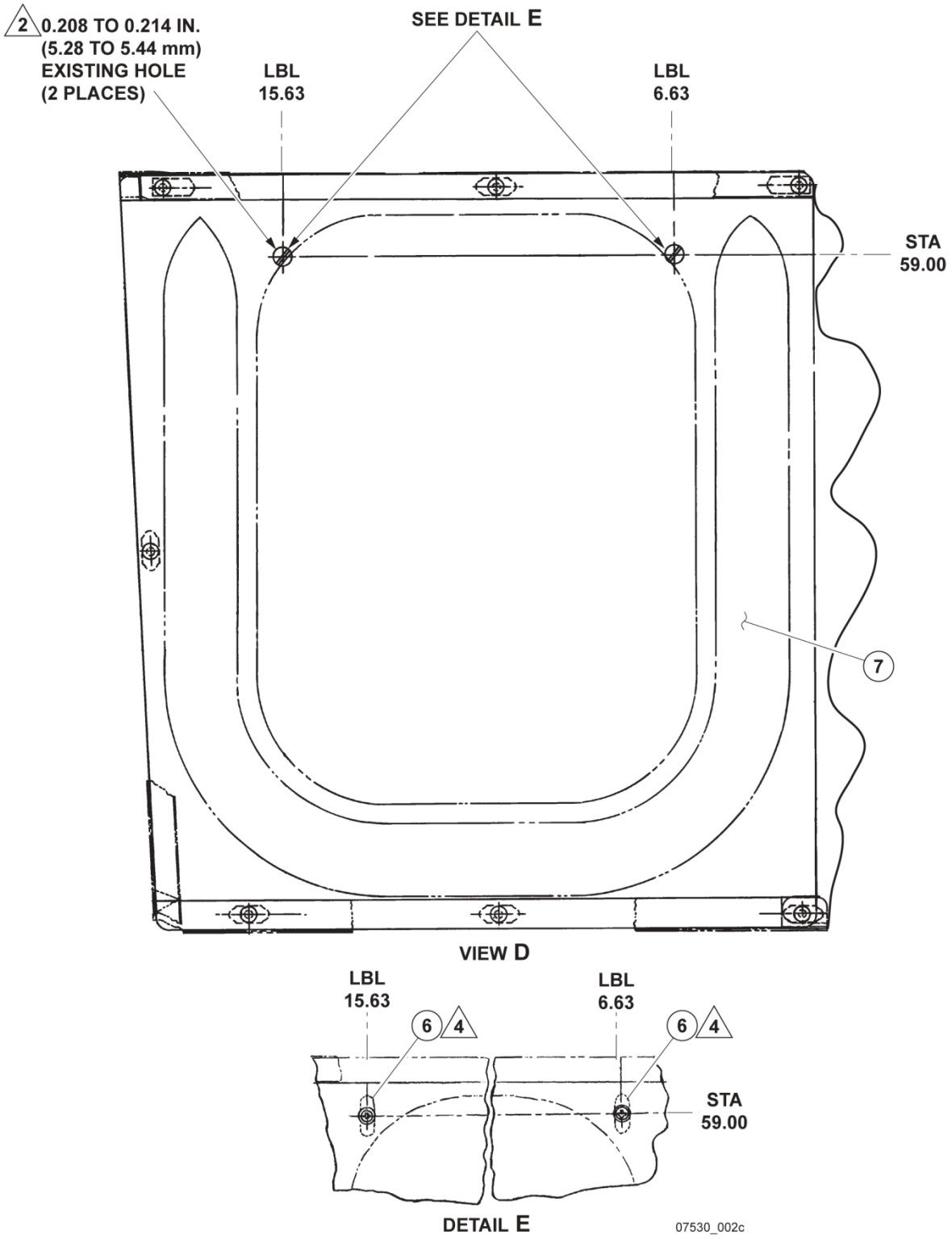

Figure 1 - Crew Seat Panel (Sheet 3 of 4)

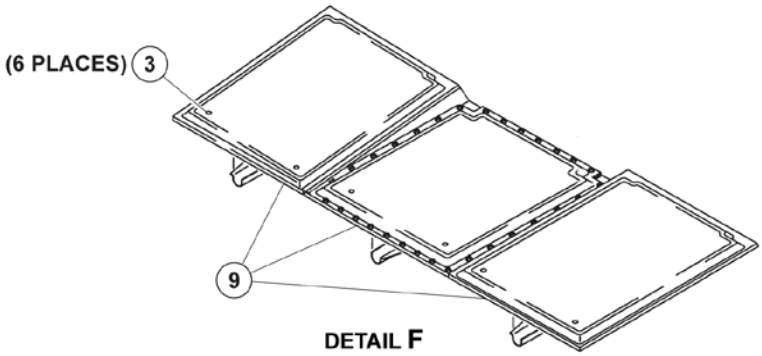

DETAIL F
SN 3587 THROUGH 4597

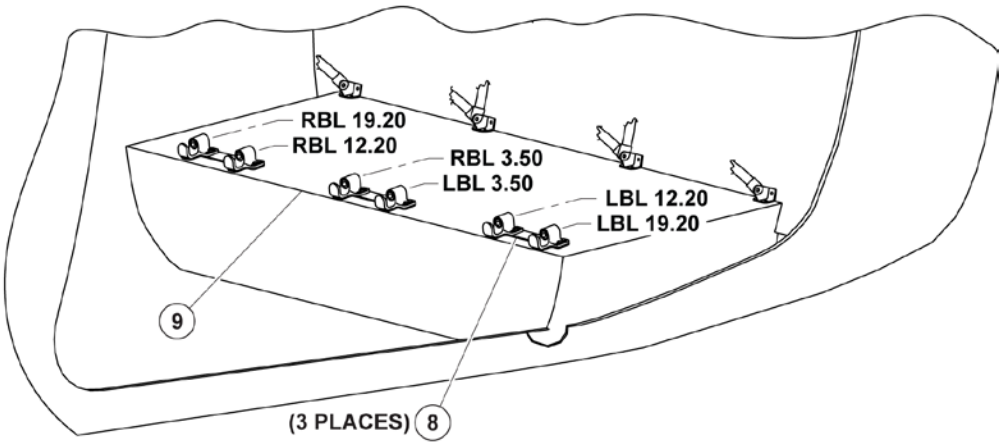

DETAIL G
SN 4598 THROUGH 4690

1. Attaching hardware
2. Seat panel (pilot and copilot)
3. Eye bolt
4. Screw (station 58.50), as applicable
5. Seat panel (pilot)
6. Nutplate
7. Seat panel (copilot)
8. Seat fitting assembly
9. Seat panel (passenger)

S SEALANT (C-308)

NOTES

1. If screws are installed (four per panel), remove and discard.
2. Install (two each) MS21059L3 nutplates and (four each) MS20426AD3 rivets.
3. Fill open screw holes using sealant (C-308).
4. Nutplate can be installed on an angle as needed.

07530_002d

Passenger area

Figure 1 - Removal of Eye Bolts and Seat Fitting Assemblies (Sheet 4 of 4)

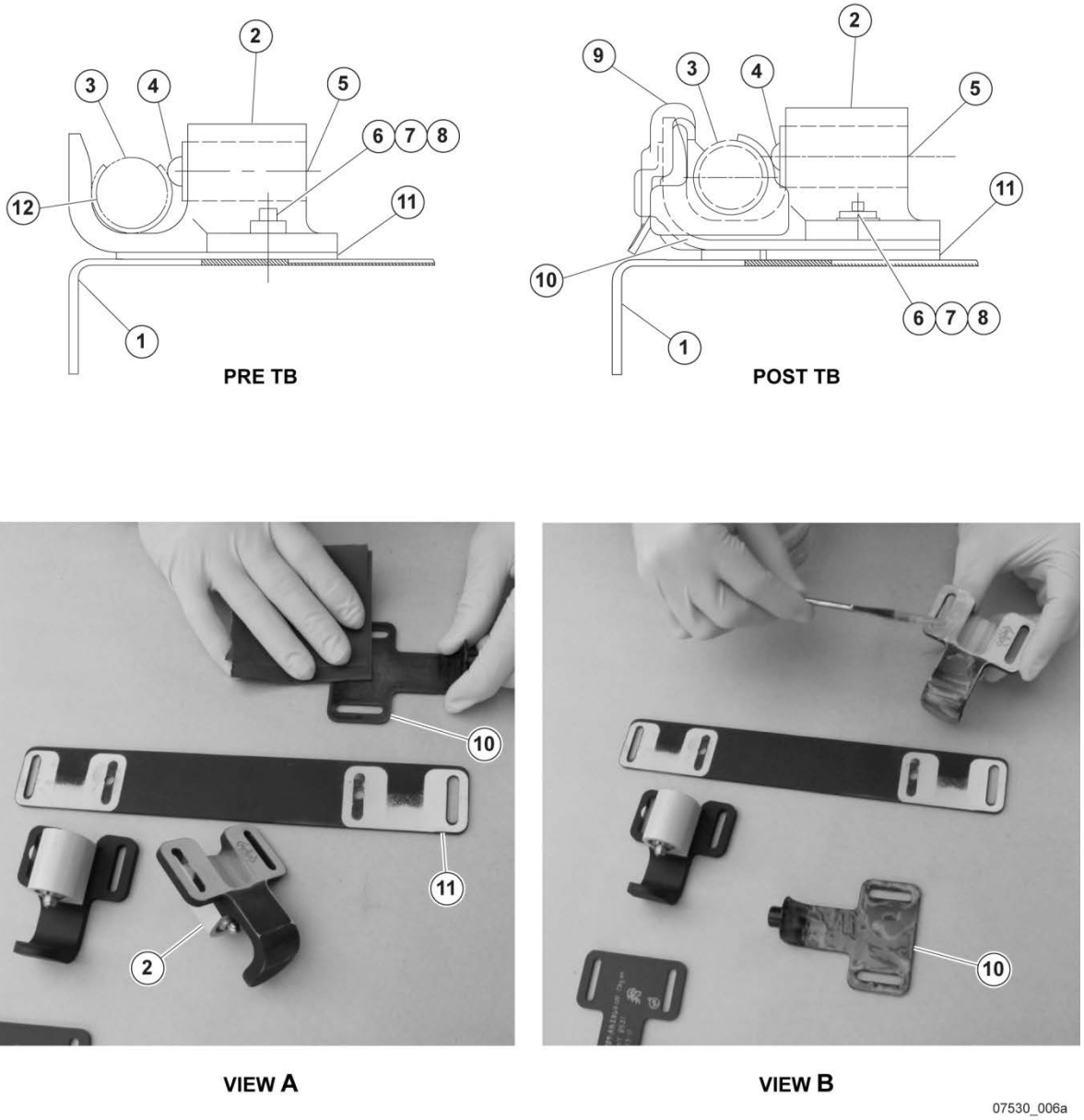

Figure 2 - Seat Clip and Base Plate Assembly Modification (Sheet 1 of 2)

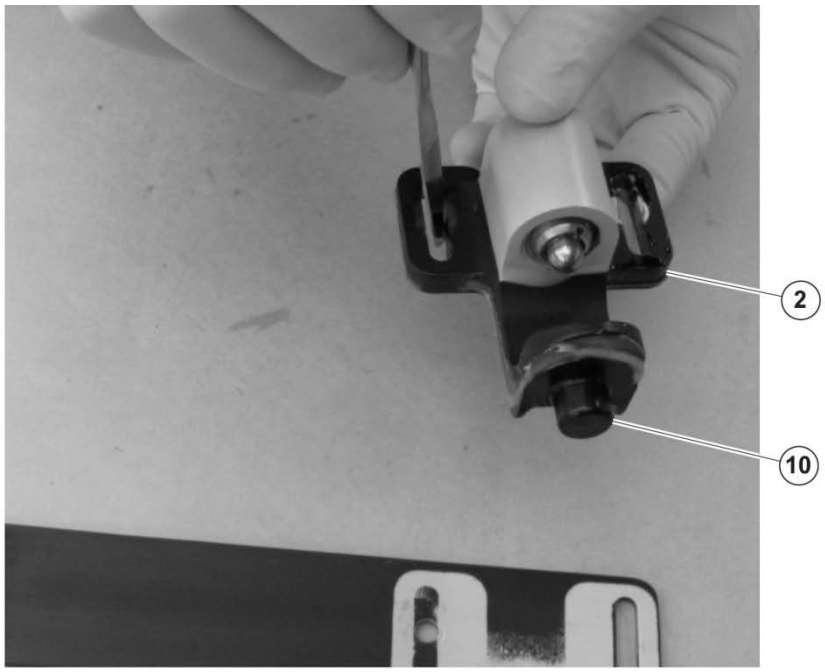

VIEW C

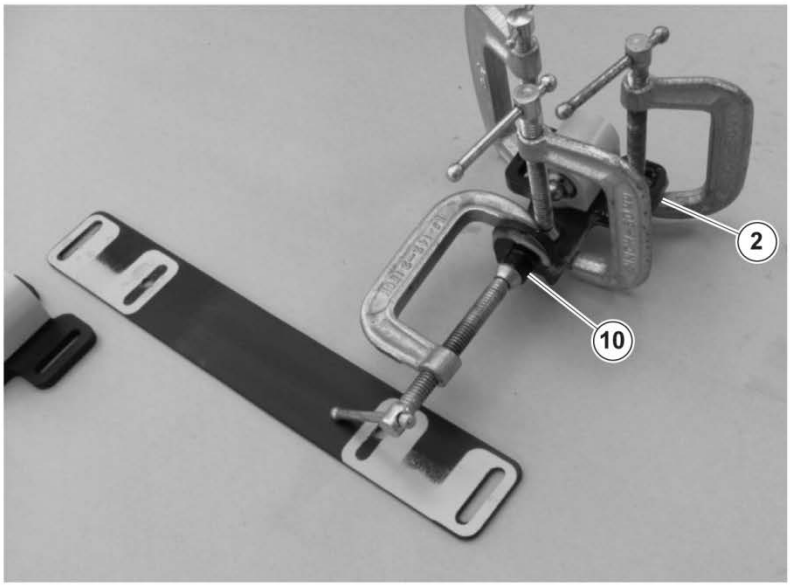

VIEW D

1. Seat panel
2. Seat fitting
3. Seat cushion forward frame
4. Seat fitting plunger
5. Plunger adjustment screw
6. Screw
7. Washer
8. Nut
9. Clip restraint
10. Base restraint
11. Base plate
12. Nylon tube

07530_006b

Figure 2 - Seat Clip Assembly Modification (Sheet 2 of 2)

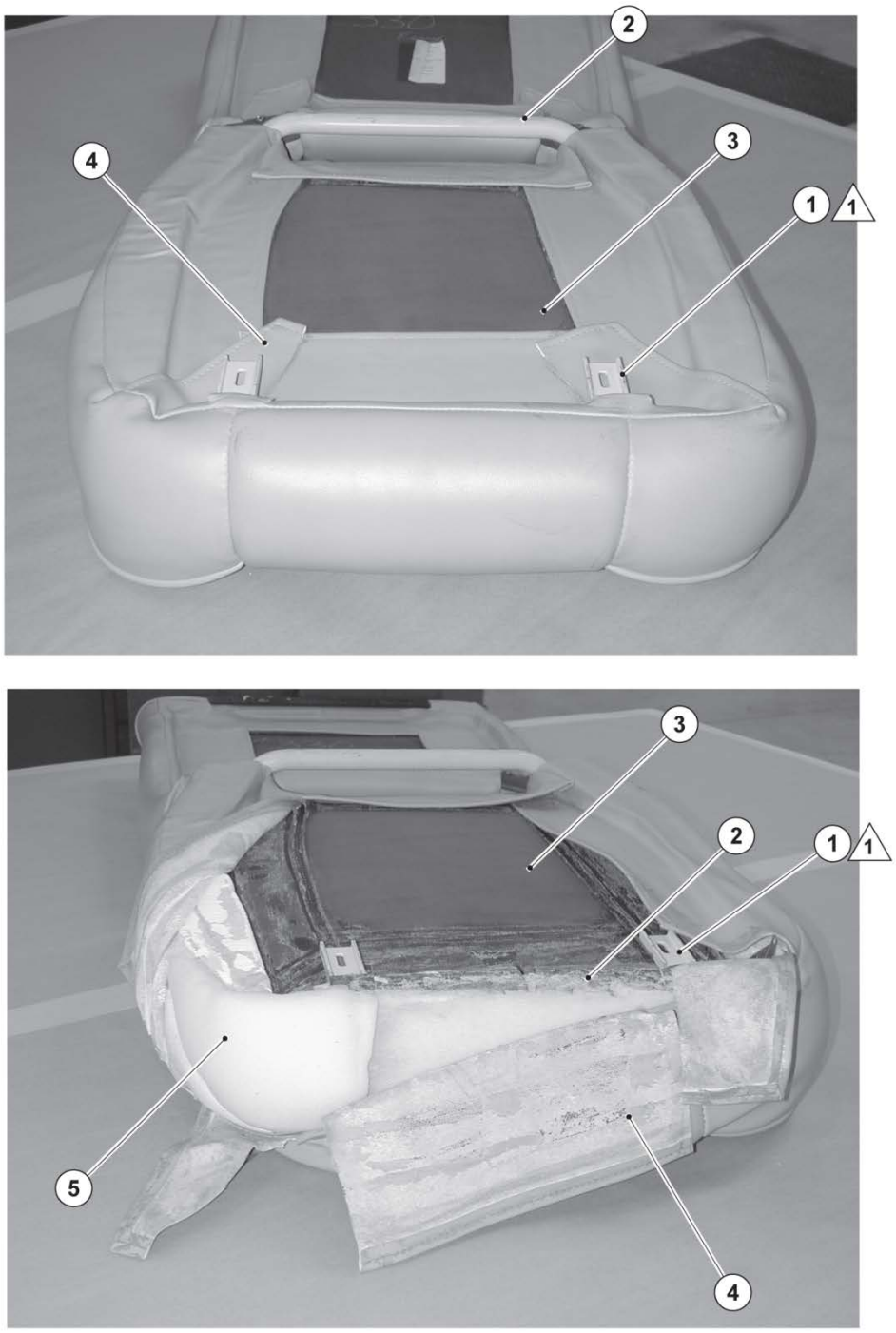

1. Clip (Ref)
2. Seat frame (Ref)
3. Seat frame cover (Ref)
4. Forward flap seat fabric (Ref)
5. Foam (Ref)

NOTE

1 Plug holes with sealant (C-308).

07530_003

Figure 3 - Seat Cushion Removal of Riveted Seat Clips

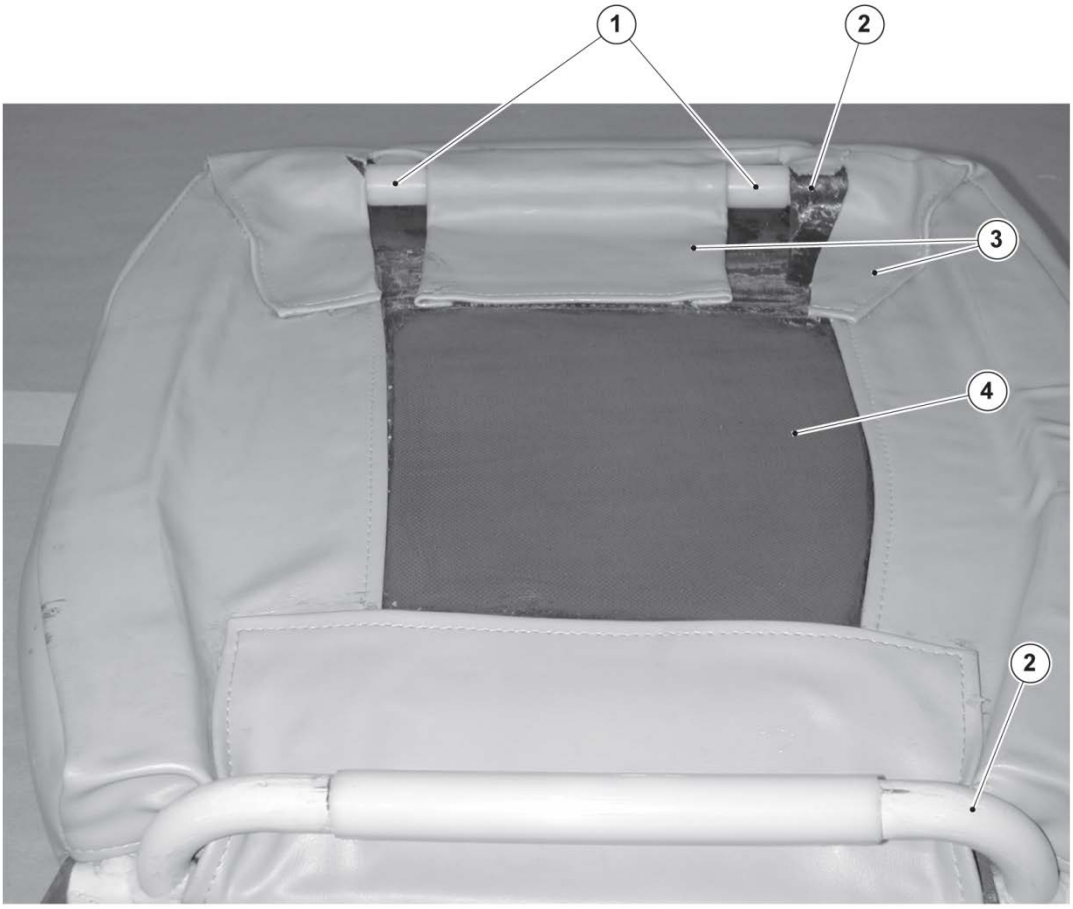

1. Forward nylon tubes
2. Seat frame
3. Seat covering material
4. Seat frame covers

07530_004a

Figure 4 - Location of Nylon Tubes (Sheet 1 of 2)

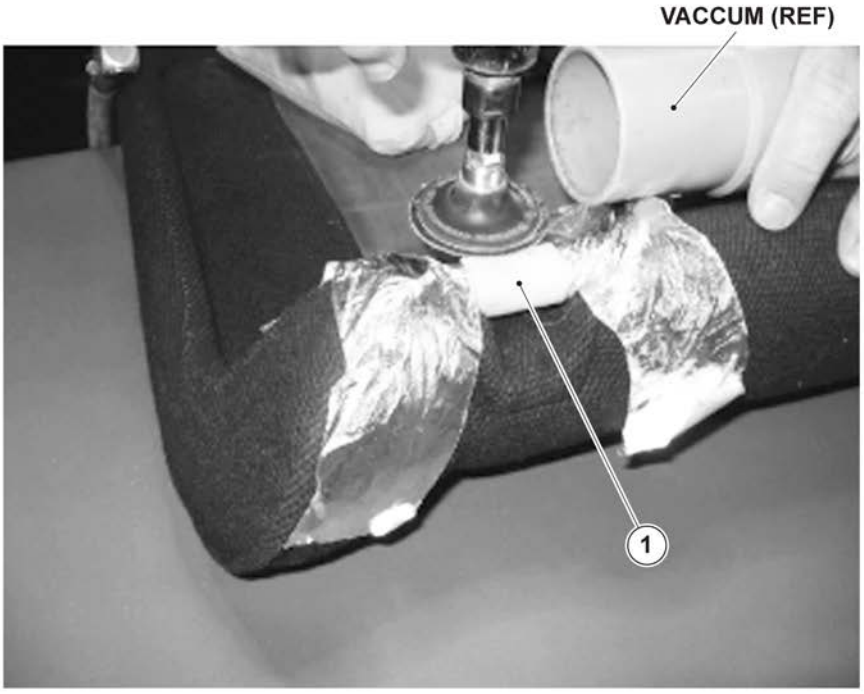

REMOVAL OF THE BONDED NYLON TUBES FORWARD END OF SEAT FRAME

1. Nylon tubes forward area seat frame
2. Seat frame

07530_004b

Figure 4 - Removal of Bonded Nylon Tubes (Sheet 2 of 2)

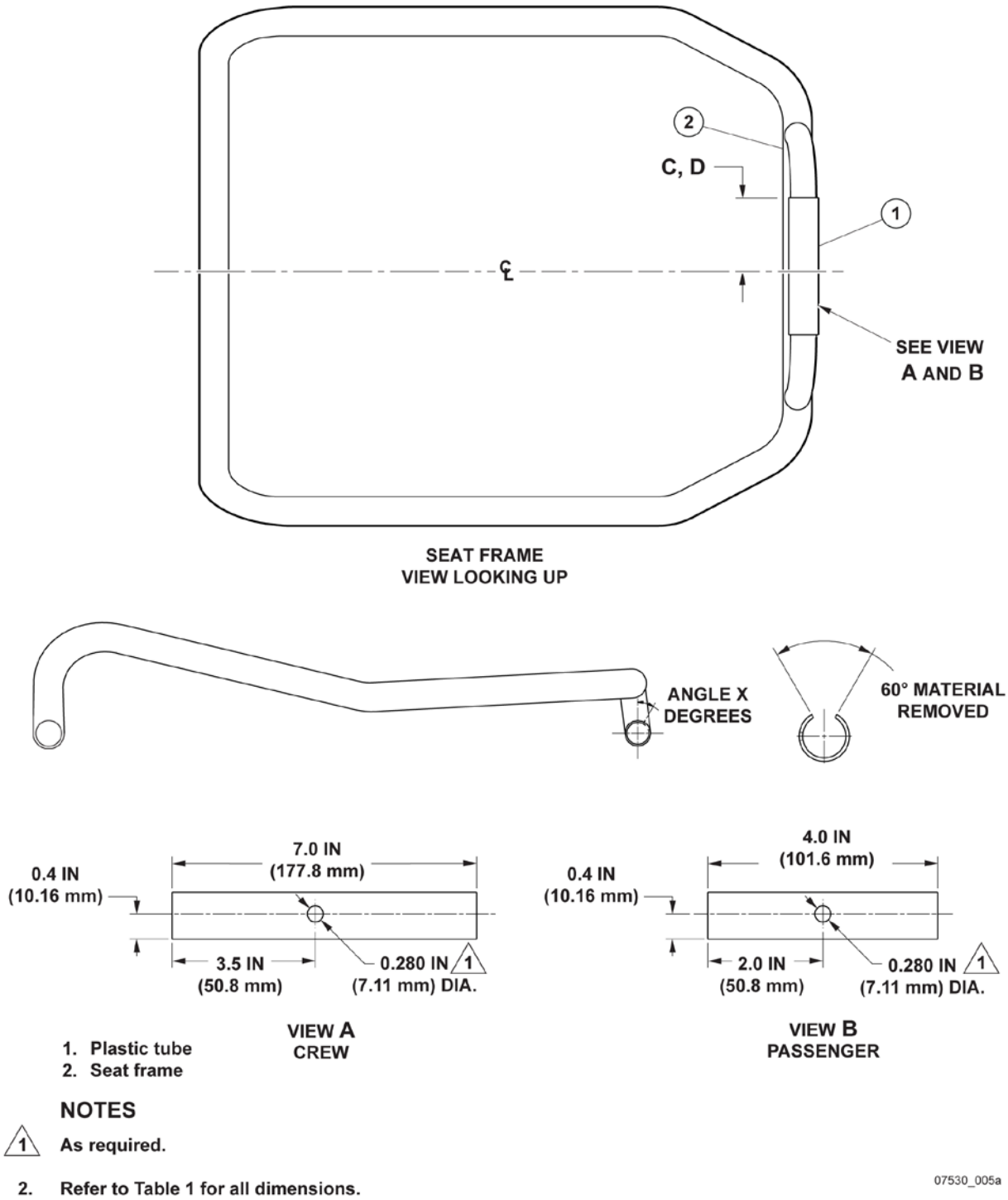

Figure 5 - Plastic Tube Installation, Crew and Passenger Seat Cushion (Sheet 1 of 2)

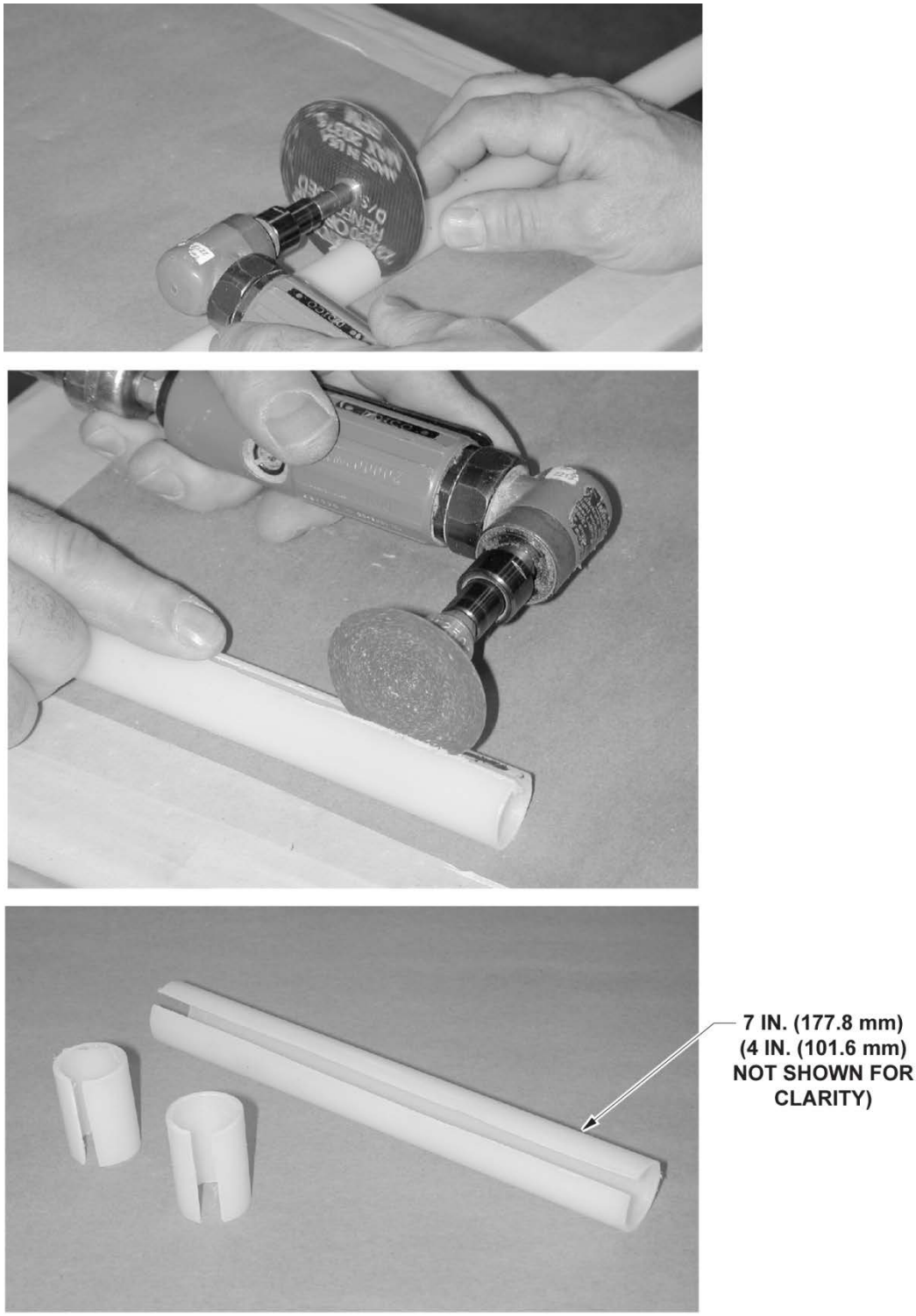

07530_005b

Figure 5 - Plastic Tube Preparation (Sheet 2 of 2)

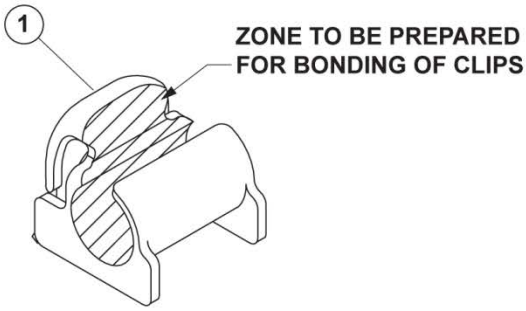

VIEW A

VIEW B

07530_009

1. Clip restraint
2. Seat frame area for clip restraint

Figure 6 - Seat Clip Restraint Location Preparation

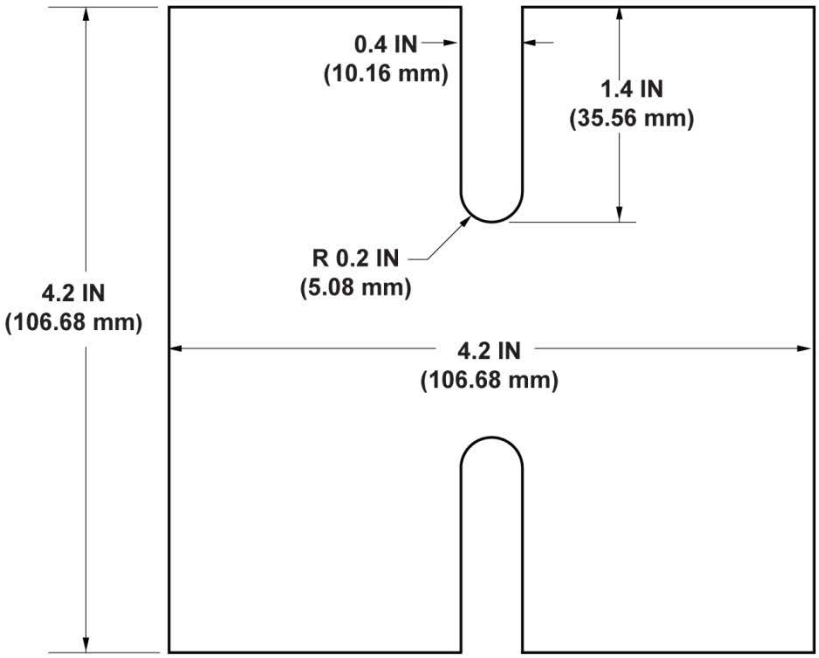

FOAM COVER
MAKE FROM COVER FABRIC (15473_12X12)

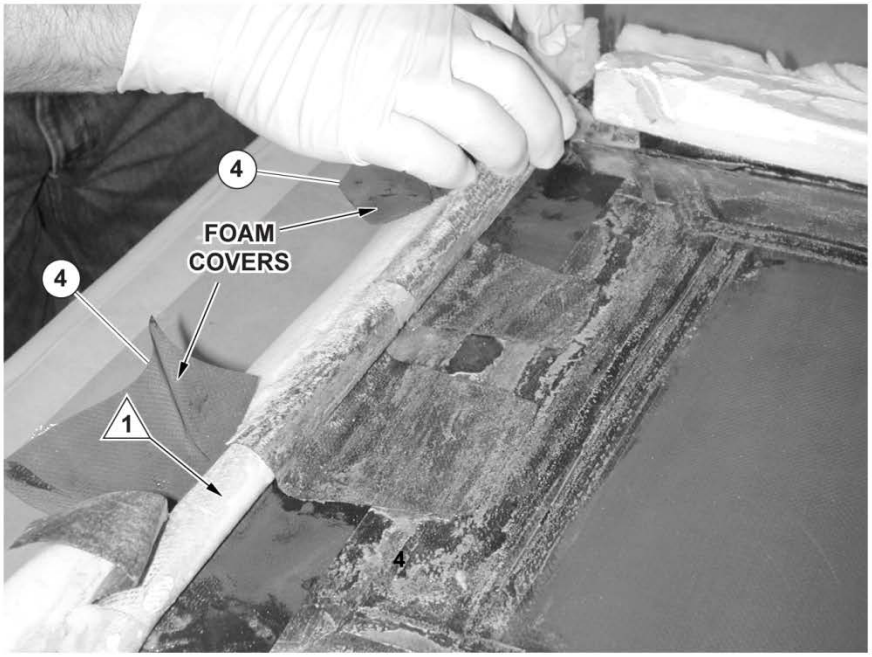

07530_001a

Figure 7 - Covers Preparation (Sheet 1 of 5)

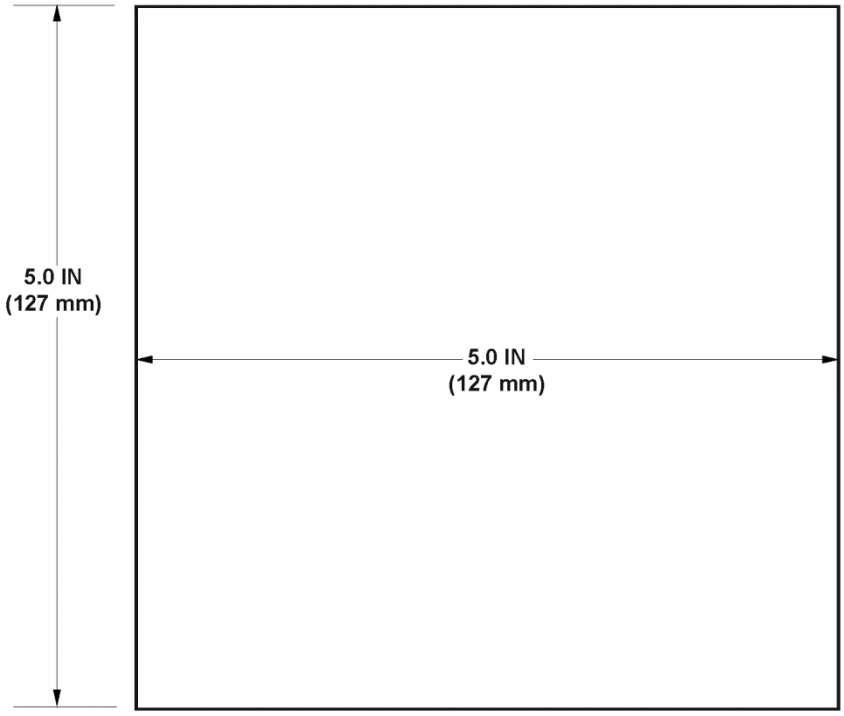

SEAT COVER DOUBLER
MAKE FROM COVER FABRIC (15473_12X12)

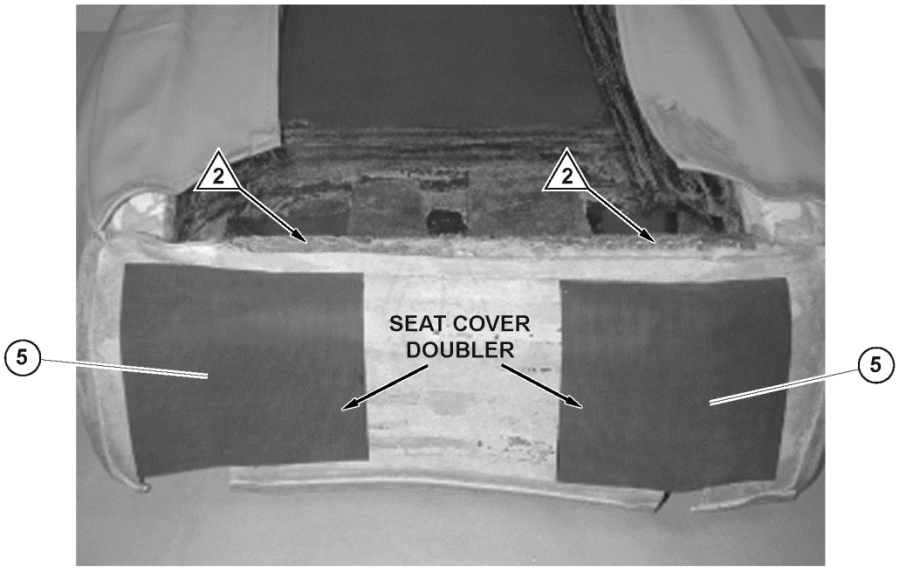

07530_001b

Figure 7 - Doublers Preparation (Sheet 2 of 5)

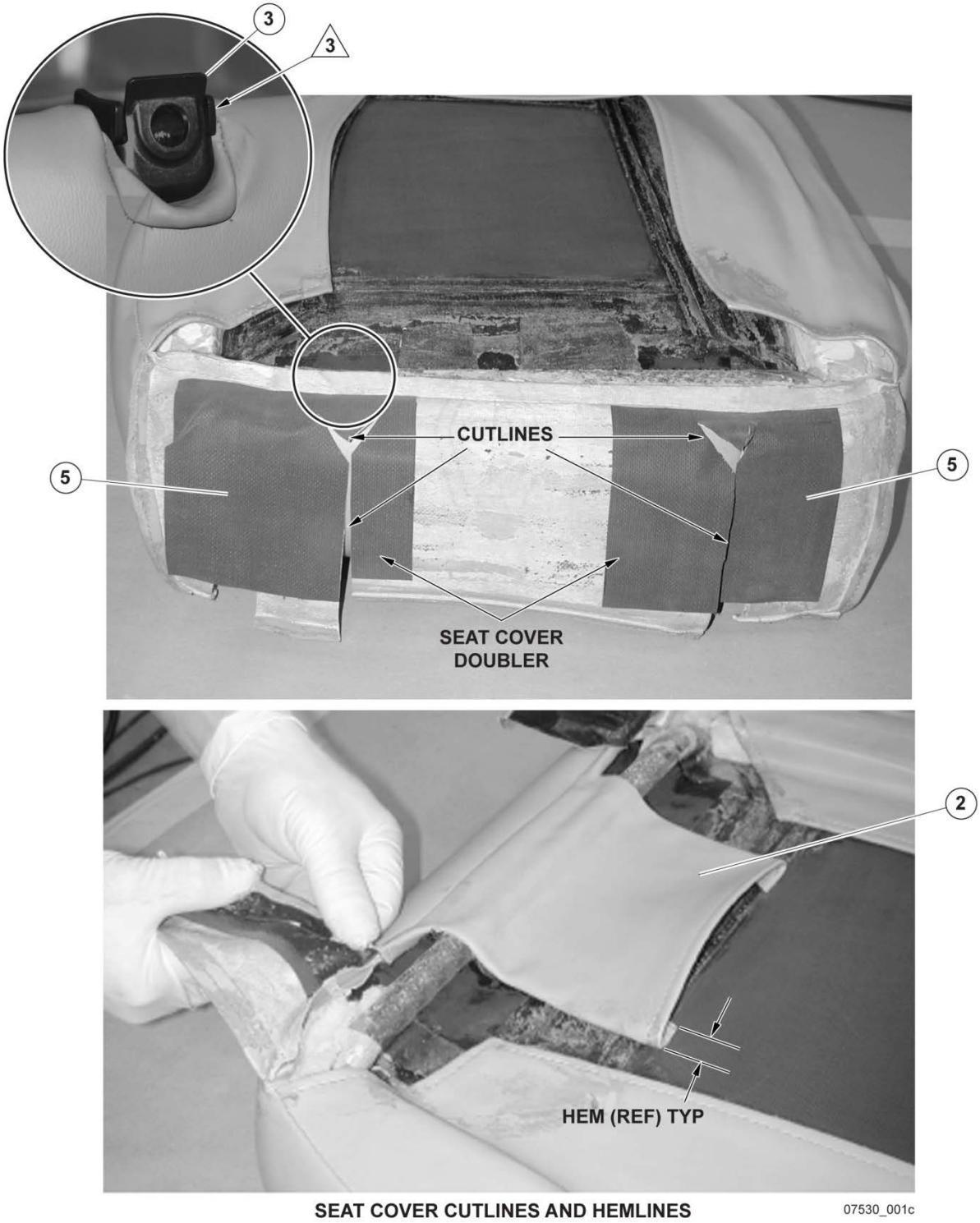

Figure 7 - Covers Preparation (Sheet 3 of 5)

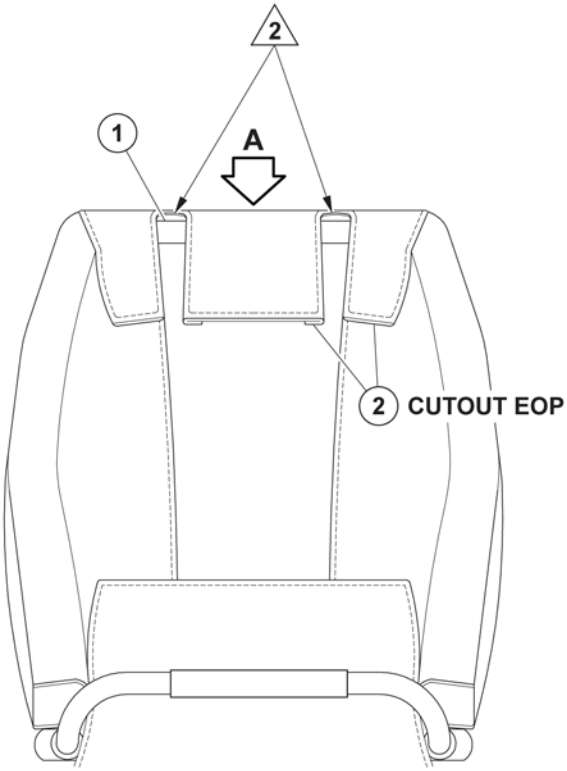

SEAT BOTTOM

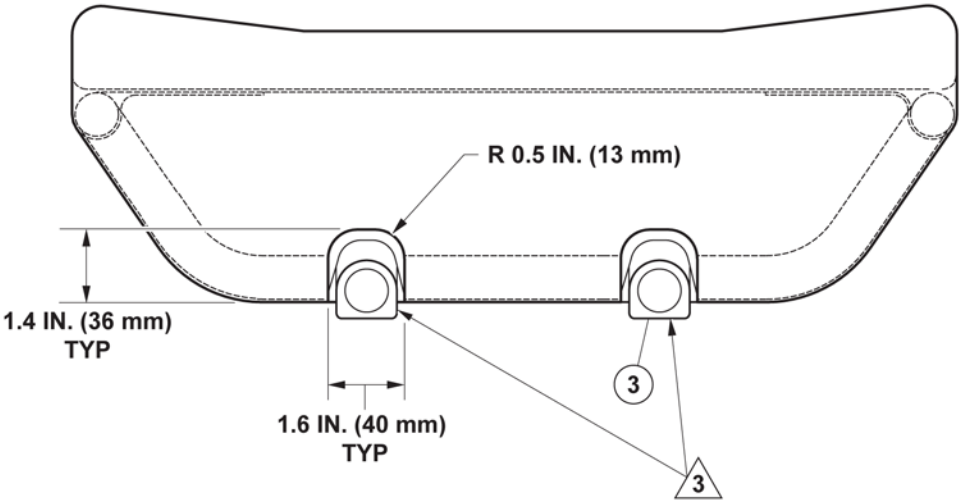

VIEW A

07530_001e

Figure 7 - Covers Clearance (Sheet 4 of 5)

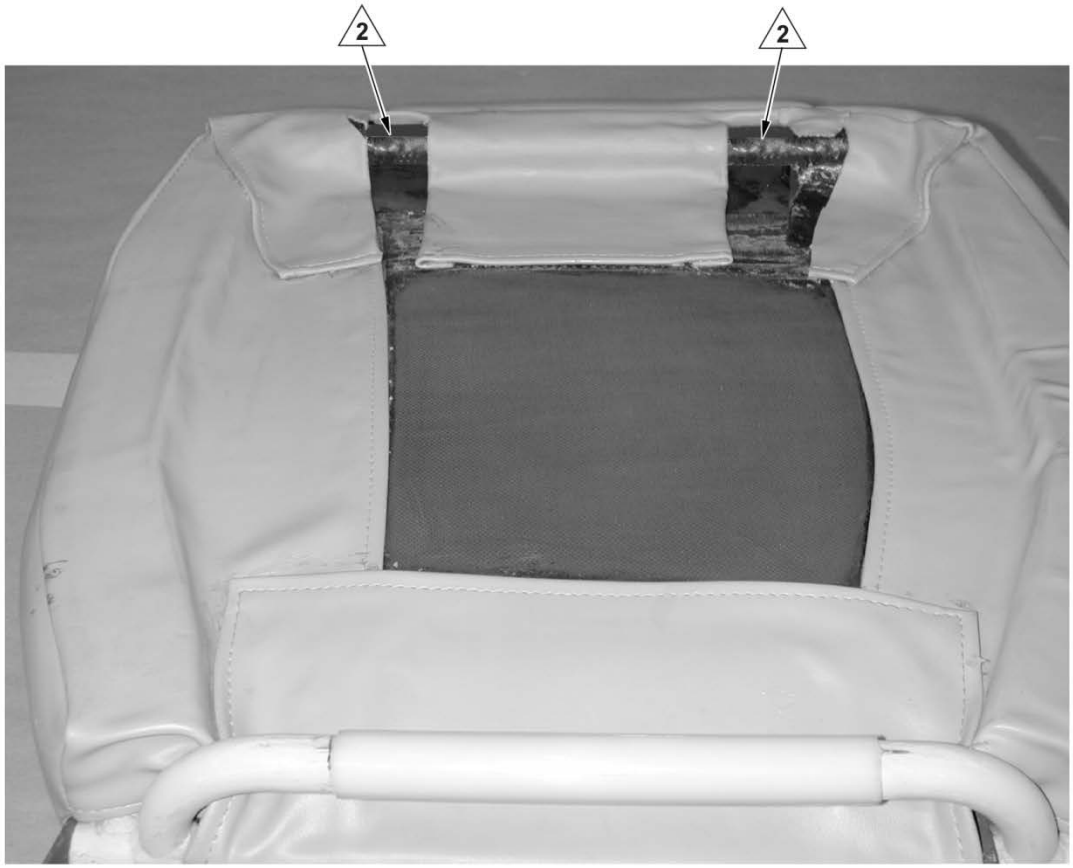

COMPLETED SEAT FABRIC BOND

1. Seat frame
2. Seat covering material
3. Seat clip restraint
4. Foam cover
5. Doubler cover

NOTES

1. Clip restraint (two each), may be temporarily installed to ensure proper gaps and clearance.
2. Clip restraint not shown for clarity.
3. Final appearance after seat cushion modification and clip restraint is installed (only one shown).

07530_001f

Figure 7 - Modified Seat Bottom Cushions (Sheet 5 of 5)

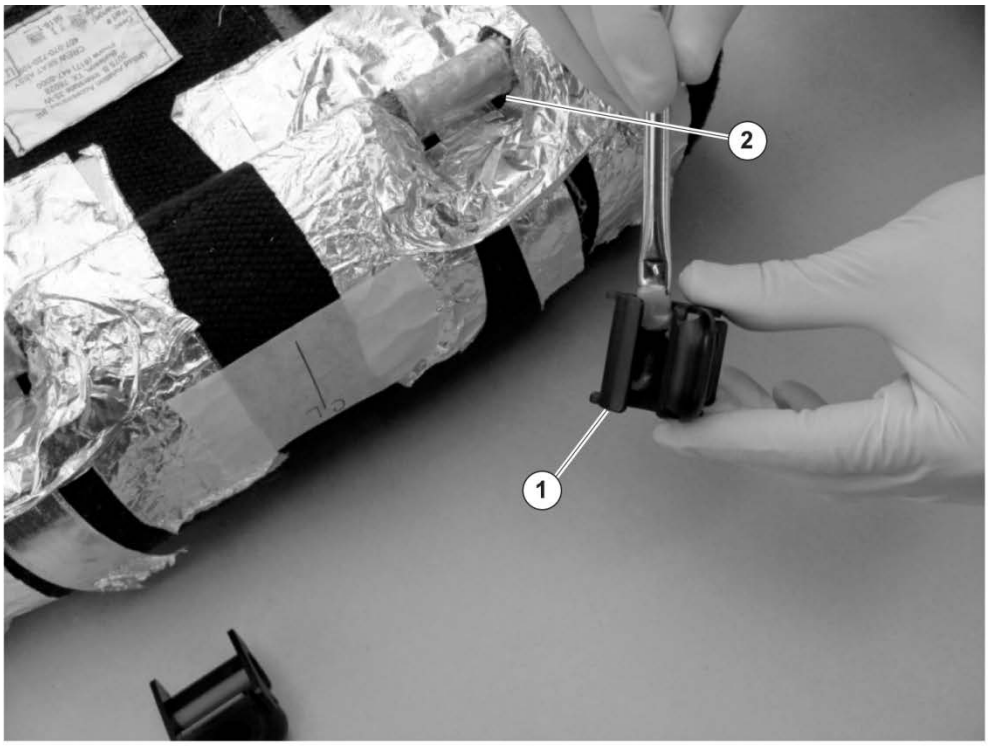

VIEW A

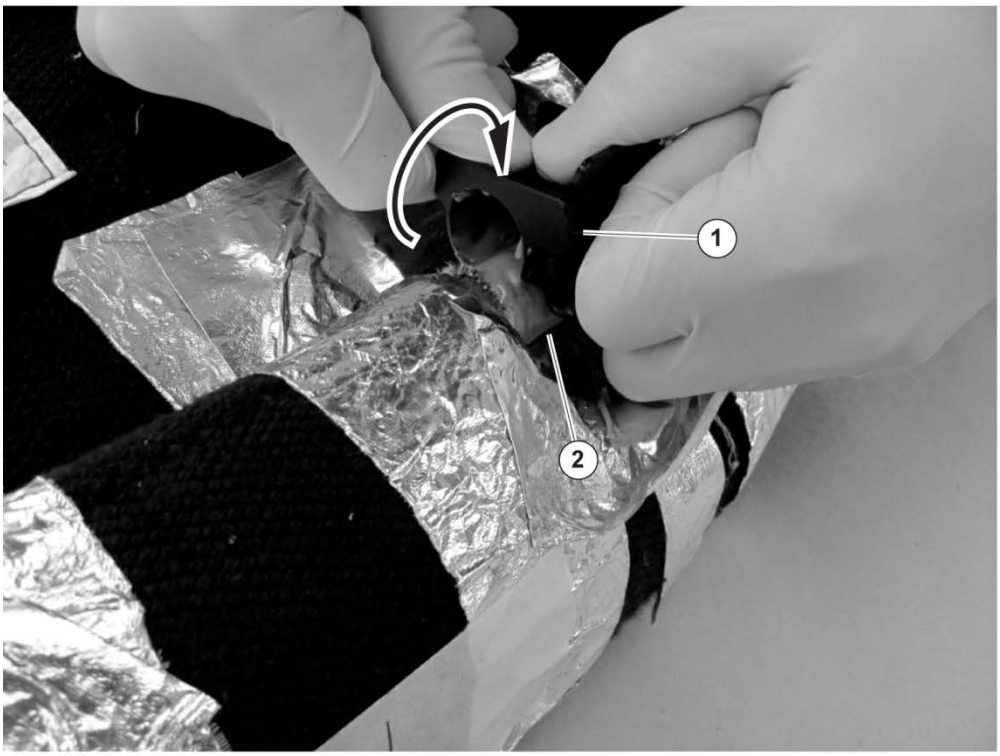

VIEW B

07530_007a

Figure 8 - Installation of Seat Frame Clip Restraint (Sheet 1 of 3)

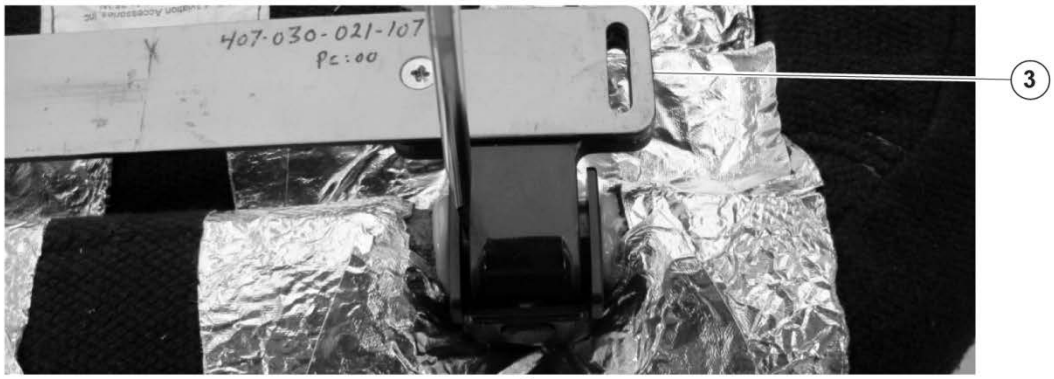

VIEW C

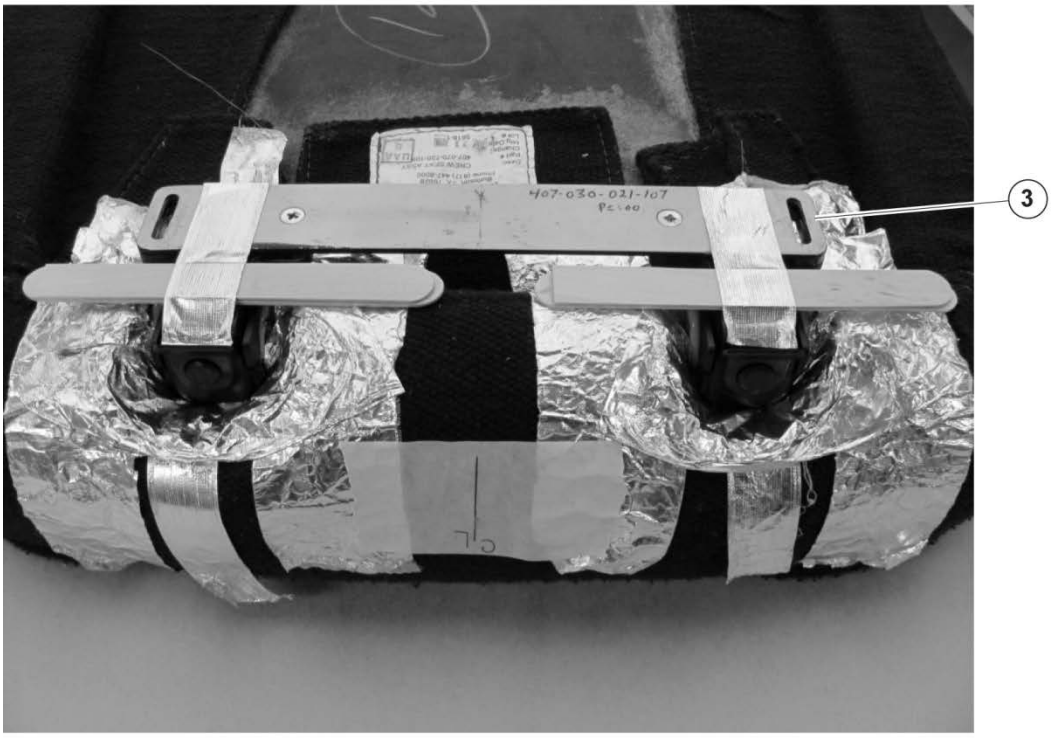

VIEW D

07530_007b

Figure 8 - Installation of Seat Frame Clip Restraint (Sheet 2 of 3)

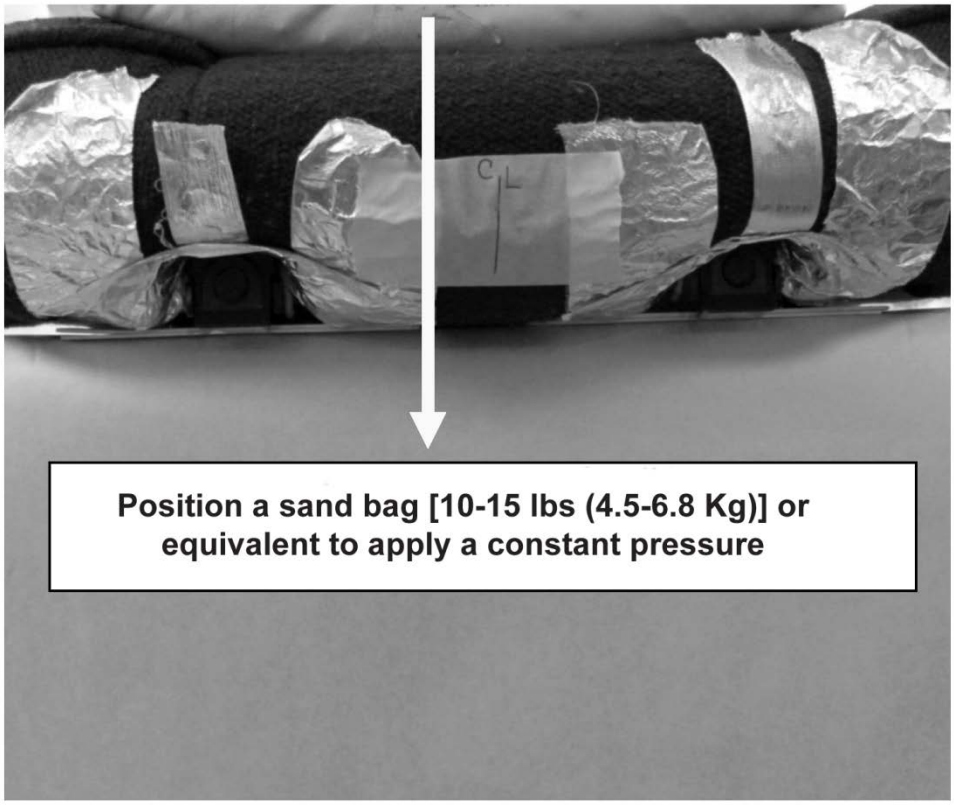

VIEW E

07530_007c

1. Clip restraint
2. Seat frame
3. Seat fitting base

Figure 8 - Installation of Seat Frame Clip Restraint (Sheet 3 of 3)

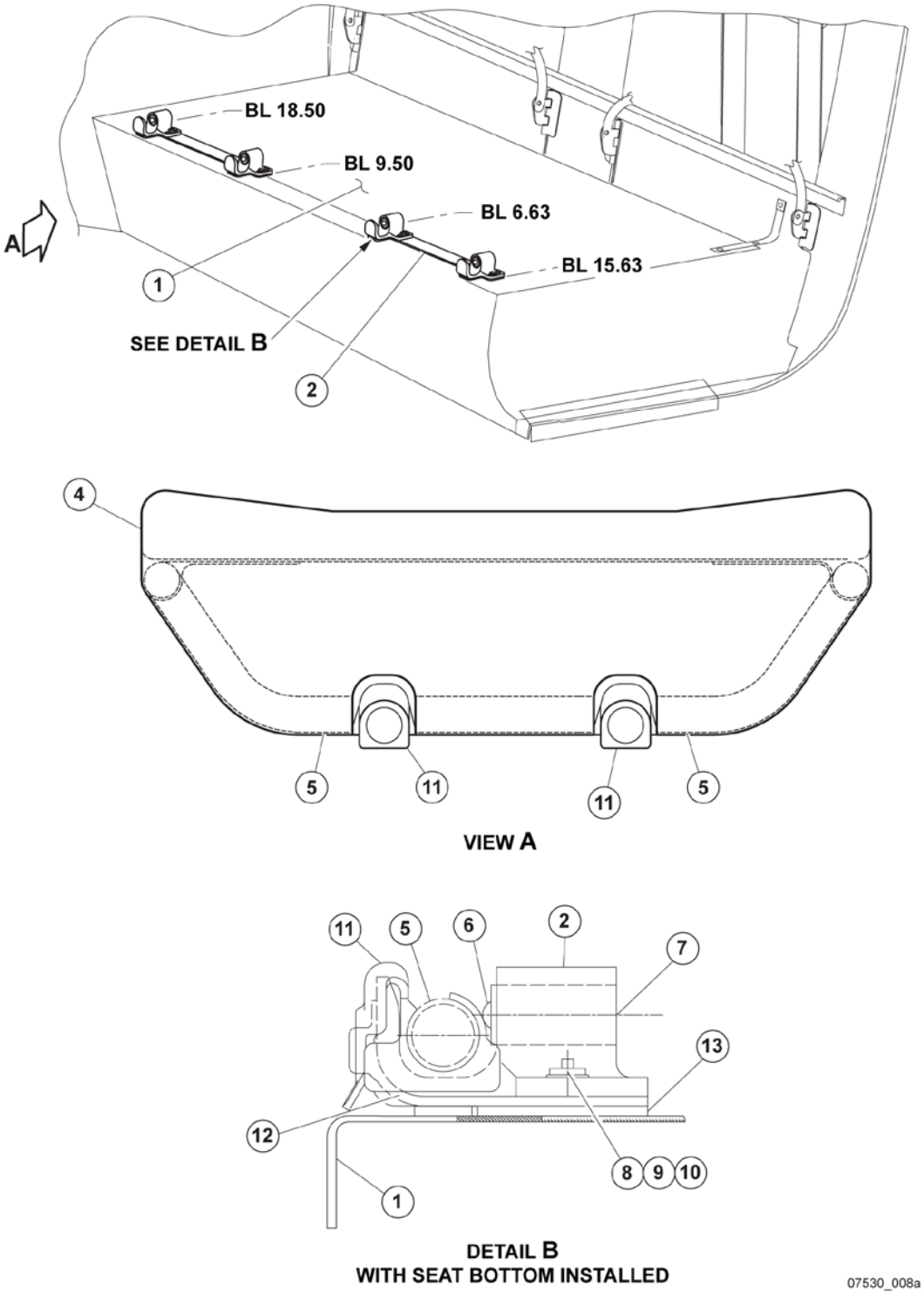

Crew area

Figure 9 - Installation of Seat Fittings with Clip Restraint (Sheet 1 of 3)

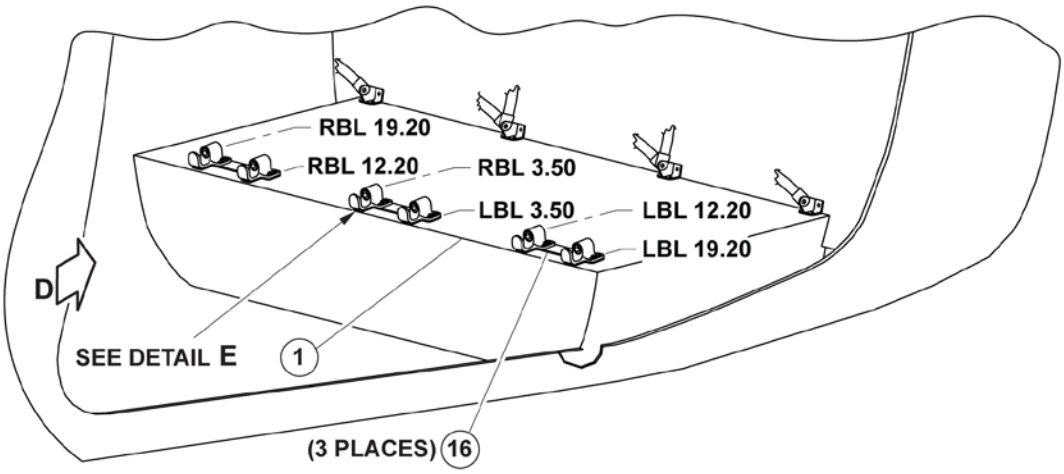

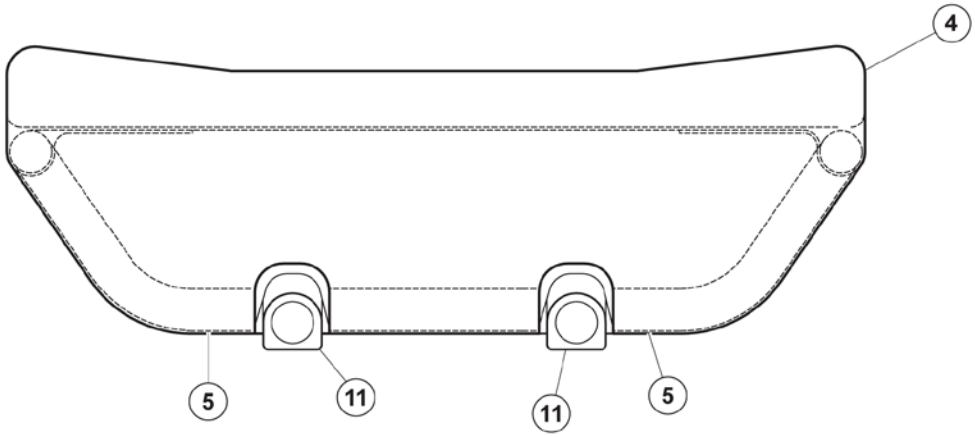

VIEW D

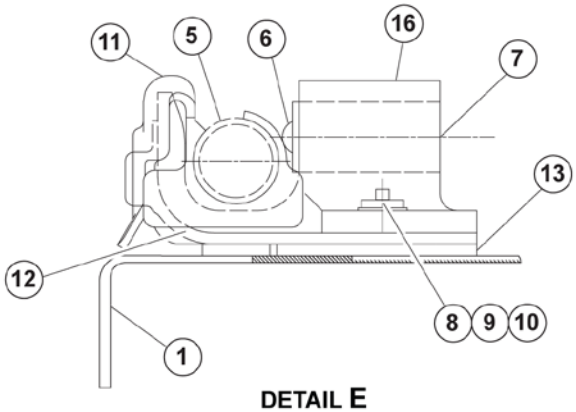

DETAIL E
WITH SEAT BOTTOM INSTALLED

07530_008b

Passenger area

Figure 9 - Installation of Seat Fittings with Clip Restraint (Sheet 2 of 3)

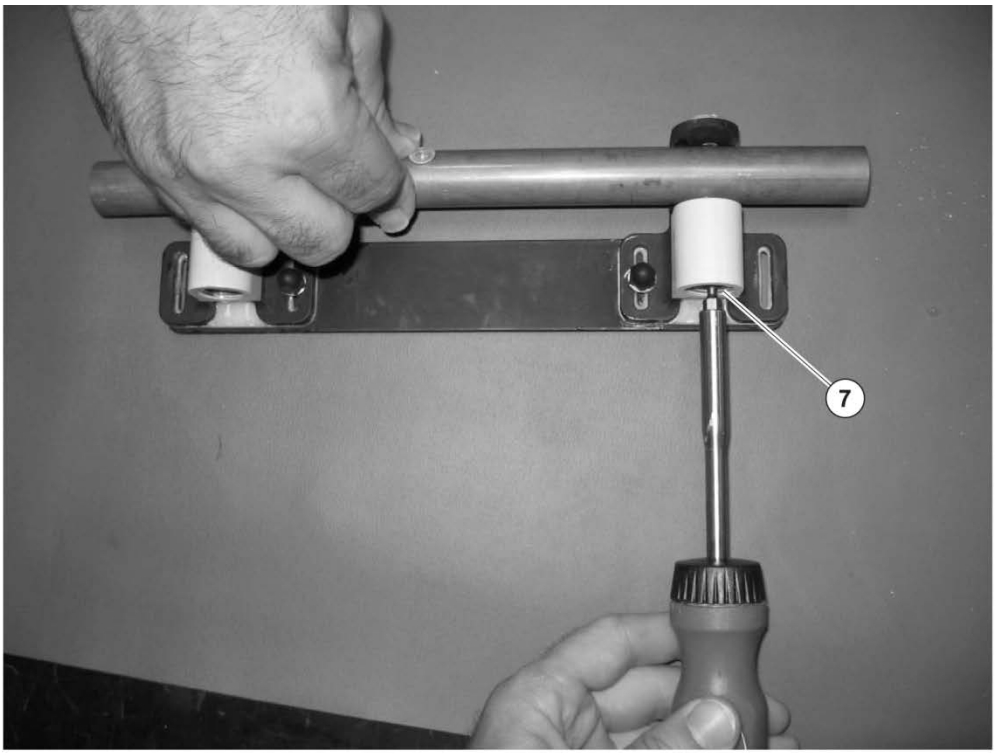

DETAIL C

1. Seat panel
2. Crew seat fitting assembly (Detail B)
3. Deleted
4. Seat cushion
5. Seat cushion forward frame
6. Seat fitting plunger
7. Plunger adjustment screw
8. Screw
9. Washer
10. Nut
11. Clip restraint
12. Base restraint
13. Base plate
14. Deleted
15. Deleted
16. Passenger seat fitting assembly (Detail E)

07530_008c

Figure 9 - Installation of Seat Fittings with Clip Restraint/ Plunger adjustment (Sheet 3 of 3)