Bell Helicopter TEXTRON

A Subsidiary of Textron, Inc.

April 7, 2005

TO: **All Owners/Operators of Bell 212 Helicopters**

SUBJECT: **REVISION "A" TO TECHNICAL BULLETIN 212-88-106: MAIN BEAM CAP 205-030-186-005 INSPECTION AND REPLACEMENT WITH MAIN BEAM CAP 205-030-186-101**

Revision "A" to this bulletin introduces a new shim P/N to be used when installing the new cap and clarifies many areas of the text. It is a complete re-write and although a major portion of the text has changed, the intent remains the same except for the areas marked with a revision bar. There is no need to upgrade aircraft that were modified in accordance with this TB prior to the release date. However, future accomplishments of this technical bulletin shall be done in accordance with the procedure outlined in this revision. Furthermore, the new shims should be added to existing installations of the 205-030-186-101 Cap as modified per the original release of this bulletin, whenever the Center Engine Deck requires removal or replacement. A method to differentiate the existing cap and the new cap was also incorporated to verify configuration.

MODEL AFFECTED: **212**

SUBJECT: **MAIN BEAM CAP 205-030-186-005 INSPECTION AND REPLACEMENT WITH MAIN BEAM CAP 205-030-186-101**

HELICOPTERS AFFECTED: **Model 212 helicopters serial number 30503 through 30999, 31101 through 31304, 32101 through 32143 and 32201 through 32262.**

[Model 212 helicopters serial number 31305 and subsequent and 35001 and subsequent will have the intent of this bulletin accomplished prior to delivery]

COMPLIANCE: PART I - INSPECTION (S)

Inspect Main Beam Cap P/N 205-030-186-005 in accordance with Part I no later than 10 000 hours of flight time after installation and every 300 hours of flight time thereafter or annually (whichever comes first) until Main Beam Cap is replaced in accordance with Part II of this bulletin. If Main Beam Cap flight time exceeds 10 000 hours, inspect Main Beam Cap within 20 flight-hours after receipt of this bulletin and every 300 hours of flight time thereafter or annually (whichever comes first) until Main Beam Cap is replaced in accordance with Part II of this bulletin.

Part II - MAIN BEAM CAP P/N 205-030-186-101 INSTALLATION

Replace Main Beam Cap in accordance with Part II when any crack is detected or as a preventive measure. The shims introduced by revision A of this bulletin shall be added to existing installations of the 205-030-186-101 as modified per the original **A**

release of this bulletin whenever the Center Engine Deck requires removal or replacement. **A**

DESCRIPTION:

A number of reports have been received of cracks in the Left Hand Main Beam Upper Cap at station 166 in the leg that extends above the engine deck. These cracks were easily detected and alerted the operator that a replacement cap should be installed before further damage occurred. Recently, however, a report of a cracked lower leg and an inboard horizontal leg has been received. The inboard horizontal and lower legs are much more difficult to see as they are concealed below the engine deck in the fuel cell area. Failure to detect these cracks early can result in major airframe damage.

A new production Main Beam Cap P/N 205-030-186-101 was created and will be installed in future production helicopters. This new Main Beam Cap is available for spares replacement of Main Beam Cap P/N 205-030-186-005. Part I of this bulletin describes the inspection to be accomplished (preferably in conjunction with a major inspection) and Part II outlines a replacement procedure to install the improved Cap. Once installed, the only visible feature of the cap is the length of the vertical flange aft of the slot at fuselage station 166 (refer to Figure 2 for existing cap (-005) and Figure 3 for new cap (-101)). This feature may be used to verify configuration. **A**

APPROVAL:

The engineering design aspects of this bulletin are FAA/DER approved.

MANPOWER:

Approximately 15 man-hours are required to complete Part I of this bulletin. Approximately 50 man-hours are required to complete Part II of this bulletin. Man-hours are based on hands-on time, and may vary with personnel and facilities available.

MATERIALS:

Required Material:
The following material is required for the accomplishment of this bulletin and may be obtained through your Bell Helicopter Textron Supply Center.

Part Number	Nomenclature	Quantity
205-030-186-101	Cap Assy	1

Part Number	Nomenclature	Quantity
212-030-015-101P	Fitting	1
412-030-055-121	Shim	2 *
100-047-5-3	Pin	5
100-047-5-4	Pin	3
100-047-6-10	Pin	2
100-047-6-11	Pin	2
100-048-5-3	Pin	4
100-048-5-4	Pin	13
100-048-5-5	Pin	5
100-048-6-3	Pin	4
100-048-6-4	Pin	18
100-048-6-5	Pin	19
100-048-6-6	Pin	2
100-048-6-7	Pin	5
100-048-8-5	Pin	2
30-015-5	Collar	29
30-015-6	Collar	50
30-015-8	Collar	2

A

Consumable Material:
The following material is required to accomplish this bulletin, however this material is considered consumable (bench stock) material and may not require ordering depending on the operators consumable material stock levels. This material may be obtained through your Bell Helicopter Textron Supply Center.

Part Number	Nomenclature	Quantity	Reference
MIL-P-85582, TY1,CL2 (513X395/910X710 or equivalent)	Primer	A/R	(C-204)
MS20426AD3	Rivet	A/R	
MS20426AD4	Rivet	A/R	
MS20426E6	Rivet	A/R	
MS20427M4C	Rivet	A/R	
MS20427M5C	Rivet	A/R	
MS20470AD4	Rivet	A/R	
MS20426AD5	Rivet	A/R	
MS20470E6	Rivet	A/R	
MS20615-4MP	Rivet	A/R	
MS20615-5MP	Rivet	A/R	
NAS9310M-4	Rivet	A/R	

* Shim 412-030-055-121 may be locally fabricated using a 0.7 by 2.2 inches strip of 0.032-inch 7075T6 aluminum, tapered to 0.010-inch.

SPECIAL TOOLS:

-NOTE-

Use drill bushings to transfer Hi-Lok holes.

0.1635-in. Drill Bushing for #40 Drill
0.1895-in. Drill Bushing for #40 Drill

WEIGHT AND BALANCE:

	Longitudinal		Lateral*	
Weight	**Arm**	**Moment**	**Arm**	**Moment**
+0.5 Lbs	166.0 in.	+83 in-Lbs	-13.9 in.	-6.95 in-Lbs
+0.23 kg	4216 mm	+9.6 kg x mm/100	353 mm	0.8 kg x mm/100

* In lateral calculations, - is left and + is right.

ELECTRICAL LOAD DATA:

Not affected

REFERENCES:

BHT-212-MM Maintenance Manual
BHT-SRM-MED-1 Structural Repair Manual

PUBLICATIONS AFFECTED:

BHT-212-IPB Illustrated Parts Breakdown
BHT-212-MM Maintenance Manual

ACCOMPLISHMENT INSTRUCTIONS:

PART I - INSPECTION, MAIN BEAM CAP P/N 205-030-186-005

1. Remove components as necessary to gain access to main beam cap, between fuselage stations 164 and 168, particularly the inboard flanges inside the main fuel tank cavity, following procedures outlined in Maintenance Manual. See Figure 1.

-NOTE-

This procedure requires entering fuel cell areas but does not require removal of any rivets.

2. Clean exposed main beam cap and inspect all flanges between fuselage station 155 and 178 with bright light and 3X magnifying glass. If a crack is found, replace cap in accordance with Part II of this bulletin before next flight.

3. Replace any damaged surface finish.

4. Re-install components removed in previous steps.

5. Make an entry in helicopter historical records indicating compliance with Part I of this technical bulletin.

PART II - INSTALLATION OF MAIN BEAM CAP P/N 205-030-186-101

1. Prepare helicopter for maintenance and place on jacks.

2. Gain access to main beam cap by removing transmission, powerplant, tailboom, cowlings and all other necessary components.

3. Remove center fuel cell.

4. Drop left fuel cell as required to gain access to outboard side of main beam cap. Seal fuel cell cavity above left fuel cell with plastic or paper and tape to protect it from falling debris.

-NOTE-

Identify the type, size and location of fasteners by looking at the manufactured head of the fasteners and referring to information in BHT-SRM-MED-1 Structural Repair Manual.

5. Remove center engine deck.

6. Remove left service deck.

7. Remove engine support fittings and fasteners securing cap to main beam.

8. Remove main beam cap exercising care to prevent any deformation and inspect main beam panel for presence of crack.

-NOTE-

Use drill bushings to transfer Hi-Lok holes.

9. Fabricate a three-piece drill template as follows: (See Figure 2)

   a. Form a 0.040-in. thick aluminum angle (Angle -a) to nest on outboard lower portion of cap that extends length of main beam cap. Clamp in place and backdrill template from cap. Remove angle. (See Figure 2)

   b. Place a 0.040-in. thick aluminum strip (Strip -b) on top of main beam cap (make a notch in the strip that will be long enough to clear the longer vertical leg of the new beam cap). The strip is to be the width of the horizontal section of the main beam cap and the length of the inboard horizontal leg. Clamp the strip in place on top of the main beam cap and backdrill template to match cap. Remove template (Strip -b, Figure 2).

   c. Locate and clamp 2 ¾-in. strip (Strip -c, Figure 2) of 0.040-in. aluminum sheet on the outboard vertical face of the main beam cap covering the area from the front end of the main beam to approximately one inch forward of the outer horizontal main beam cap leg (See Figure 2). Drill the strip to match the cracked cap. Remove strip (Strip -c, Figure 2).

   d. Deburr all three parts of the drilled templates.

-NOTE-

All holes except Hi-Lok pin holes should be drilled full size. Hi-Lok pin holes should be 0.0015 to 0.003-in. undersize to allow reaming to match existing holes.

10. Drill lower and outboard flanges of new main beam cap using (Angle -a) template as a guide. Attach first (Strip -b) template to top of new cap and drill inboard flange using Clecos. Attach second strip (Strip -c) to lower flange of cap using Clecos and drill upper flange. Remove template parts and deburr cap.

11. Install main beam cap on main beam using noted fasteners. Make sure Hi-Lok fastener holes are reamed to correct tolerance. Install cap to main beam using Clecos and install fasteners between FS 155 and FS 166, then work both ways.

12. Install new engine support fitting P/N 212-030-015-101 (or -101P) to replace fitting P/N 212-030-015-001, as follows:

    a. Clamp fitting to support P/N 212-030-016-003.

b. Drill and ream to match support Hi-Lok pin hole pattern and engine support fitting.

c. Remove, deburr holes and install using noted fasteners.

13. Install left service deck using noted rivets.

14. Install center engine deck using noted rivets and (qty 2) shims P/N 412-030-055-121. Shims are to be located between cap & deck at forward & aft ends of top cap reinforcement doubler (See Figure 3). Shims previously installed in accordance with the original release of this bulletin (1 x 6 x 0.032 inch tapered to 0.010 inch) are acceptable but shall be replaced with the new shims (introduced with this revision) whenever the Center Engine Deck requires removal or replacement. **A**

15. Prime all raw metal with primer (C-204).

16. Clean fuel cell cavities.

17. Install components removed at steps 2, 3 and 4. Follow procedures in Maintenance Manual.

18. Make an entry in helicopter historical records indicating compliance with Part II of this technical bulletin.

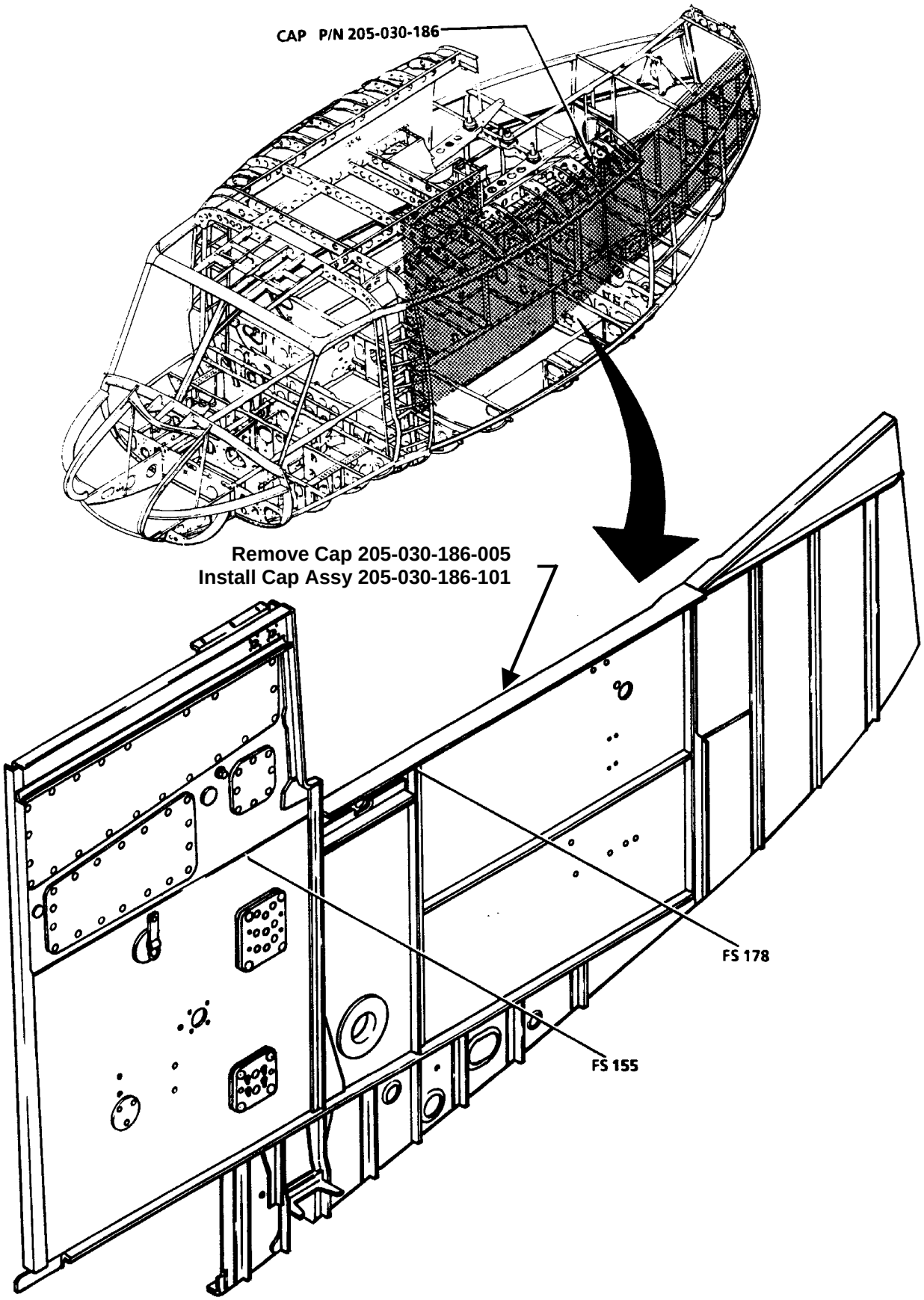

FIGURE 1

TB412-30-1

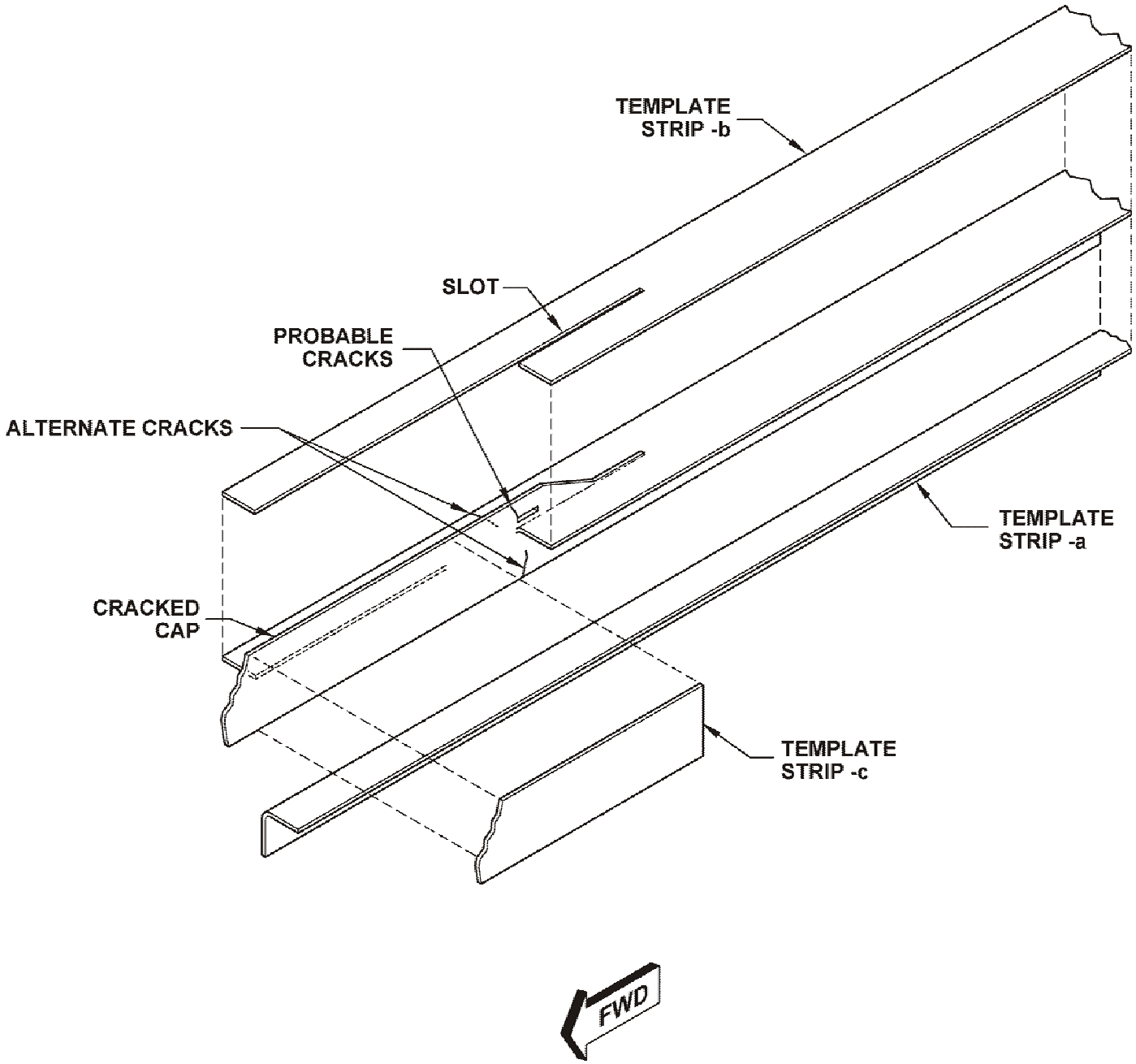

FIGURE 2
Template Layout

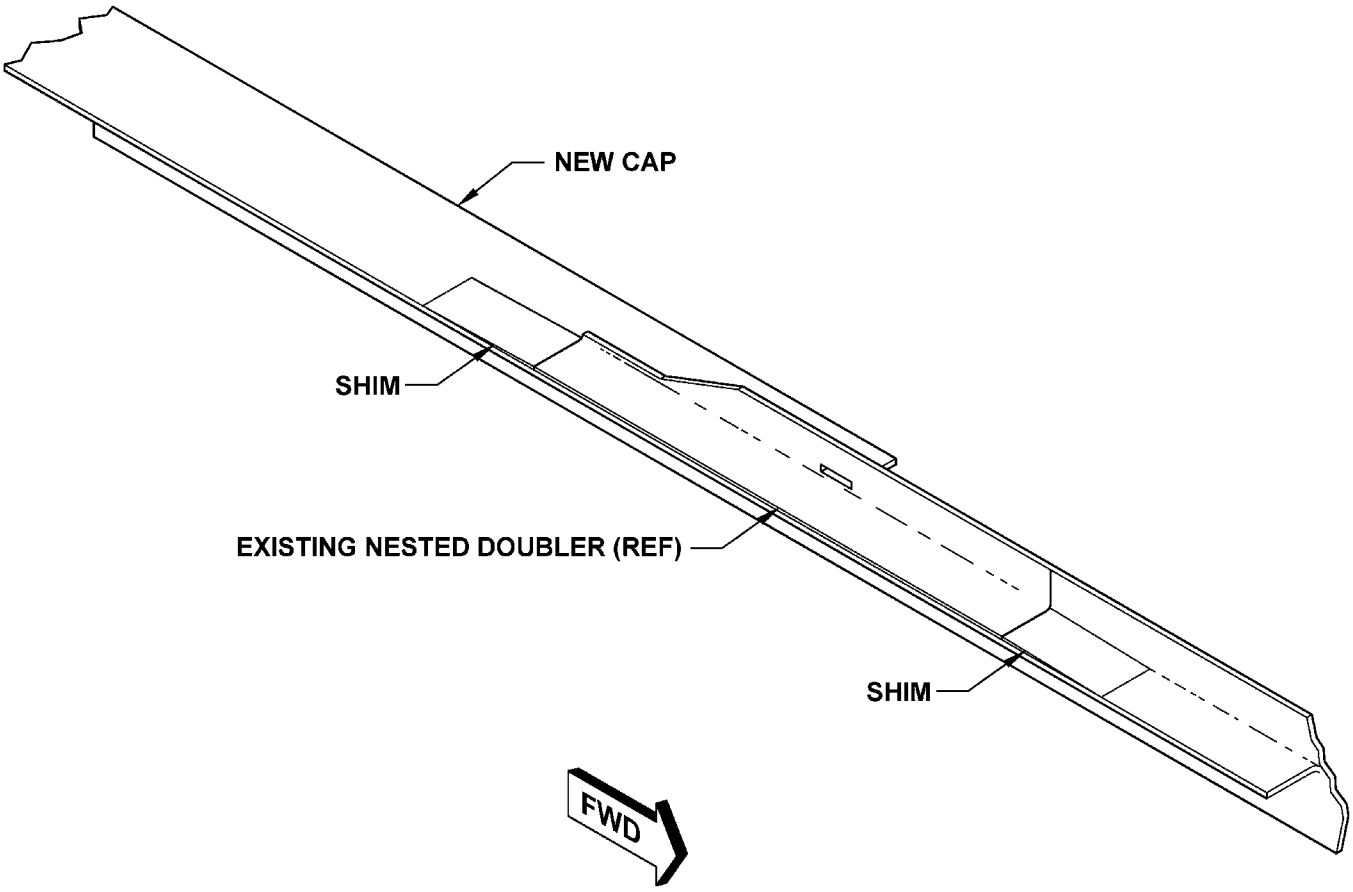

FIGURE 3
Shim Installation