A Textron Company

ALERT SERVICE BULLETIN **412CF-23-74**

8 June 2023

MODEL AFFECTED: **412CF**

SUBJECT: **FLEXIBLE TUBING HCTE-1250-0 AND 130-056C10-0970, REMOVAL OF**

HELICOPTERS AFFECTED: **Part I: Serial numbers 46400 through 46499.**

Part II: Serial number 46401, 46403, 46405 through 46427, 46429, 46430, 46432 through 46442, 46444, 46445, 46446, 46448, 46449, 46450, 46452 through 46474 and 46476 through 46499.

[Serial number 46400, 46402, 46404, 46428, 46431, 46443, 46447, 46451, and 46475 are not affected by PART II. Flexible tubing P/N 130-056C10-0970 is not installed.]

COMPLIANCE: **PART I:** For all affected helicopter serial numbers, within the next 600 flight hours or 24 months after the release date of this bulletin, whichever comes first.

PART II: For all affected helicopter serial numbers, if SPS-65 kit 412-706-091 has been installed, within the next 600 flight hours or 24 months after the release date of this bulletin, whichever comes first.

DESCRIPTION:

Bell has received reports of electrical wires found with chafing damage through the insulation. In one case, two damaged wires shorted causing an inflight failure of a cockpit instrument, followed by a burning smell and smoke in the cockpit.

The wires that were found with the chafing damage were routed in flexible tubing installed at the time of manufacture to facilitate wiring harness installation. The

investigation following this incident indicates that wires inadequately protected and secured when routed in a flexible tubing may be susceptible to chafing damage with time in service. Factors such as quantity of loose wires routed in the tubing, number and severity of bends, total length of the tubing, moisture accumulation and the helicopter's inherent vibrations can contribute to the wiring chafing damage.

The subject flexible tubing HCTE-1250-0 was included as part of the basic helicopter design on the model 412CF. The second plastic flexible tubing 130-056C10-0970, was installed on helicopters in accordance with the Bell SPS-65 kit drawing 412-706-091 (BHT-412CF-II-14), as per modification 412-575-023-101/-103.

To mitigate the risk of wire chafing damage that could lead to failure of an electrical system, this ASB mandates the removal of the subject flexible tubing from all affected helicopters.

PART I of this bulletin provides the instructions for the removal of the flexible tubing HCTE-1250-0 and provides guidance for securing and clamping of the wiring that was routed in the flexible tubing.

PART II of this bulletin provides the instructions for the removal of flexible tubing 130-056C10-0970 and provides guidance for securing and clamping of the wiring that was routed in the flexible tubing.

APPROVAL:

The engineering design aspects of **PART I** of this bulletin are FAA approved.

The engineering design aspects of **PART II** of this bulletin are Bell Engineering approved.

CONTACT INFO:

For any questions regarding this bulletin, please contact:

Bell Product Support Engineering
Tel: 1-450-437-2862 / 1-800-363-8023 / productsupport@bellflight.com

MANPOWER:

Approximately 40 man-hours are required to complete this bulletin. This estimate is based on hands-on time and may vary with personnel and facilities available.

WARRANTY:

There is no warranty credit applicable for parts or labor associated with this bulletin.

MATERIAL:

Required Material:
The following material is required for the accomplishment of this bulletin and may be obtained through your Bell Helicopter Textron Supply Center.

Part Number	Nomenclature	Qty (Note)	Reference *
AS21919WDG10Y	CLAMP	1	
AS21919WDG11Y	CLAMP	11	
AS21919WDG14Y	CLAMP	9	
AS21919WDG24Y	CLAMP	1	
NAS1712D6-12N	CLAMP	2	
NAS1712D8-14N	CLAMP	2	
MS9551-006	BRACKET	1	
MS9596-014	BRACKET	1	
MS9596-022	BRACKET	1	
MS9596-024	BRACKET	1	
MS9596-144	BRACKET	1	
NAS1149D0332J	WASHER	41 (1)	
NAS1801-3-7	SCREW	4 (2)	
NAS1801-3-8	SCREW	6 (2)	
NAS1801-3-9	SCREW	3 (2)	
NAS1801-3-12	SCREW	9 (2)	
NAS1801-3-17	SCREW	1 (2)	
NAS1801-3-22	SCREW	1 (2)	
NAS43DD3-16N	SPACER	2	
NAS43DD3-32N	SPACER	8	
NAS43DD3-48N	SPACER	1	
NAS9926-3L	NUT	9 (3)	
NAS6203-13	BOLT	1	
80-005-2-8	INSERT	3	
120-229-3E12H	STANDOFF	1	

Notes:

1. Existing and removed washer P/N AN960JD10L may be reused.
2. Existing and removed screw P/N MS27039-3- (**) may be reused.
3. Existing and removed nut P/N MS21042L3 may be reused.

Consumable Material:
The following material is required to accomplish this bulletin, but may not require ordering, depending on the operator's consumable material stock levels. This material may be obtained through your Bell Supply Center.

Part Number	Nomenclature	Qty (Note)	C-Code
AS33671	STRAP	A/R (4)	C-592
2010-00088-00	SEALANT	A/R	C-308
299-947-100 TY II CL 2	ADHESIVE	A/R	C-317
299-947-125 TY I	ADHESIVE	A/R	C-331
MS21266-1N/-2N/-3N/-4N	GROMMET (Plastic)	A/R (2)	

Notes:

1. Suitable size and length of AS33671 straps to be determined during installation.
2. May be required in some areas to allow for proper protection of the wires passing through a bulkhead. The dash number required will vary based on the sheet metal thickness. Refer to the table below.

Dash No.	Sheet Thickness
-1N	0.015 – 0.052 inch (0.38 – 1.32 mm)
-2N	0.052 – 0.085 inch (1.32 – 2.46 mm)
-3N	0.085 – 0.128 inch (2.46 – 3.25 mm)
-4N	0.128 – 0.192 inch (3.25 – 4.9 mm)

* C-XXX numbers refer to the consumables list in the BHT-ALL-SPM, Standard Practices Manual

SPECIAL TOOLS:

None required.

WEIGHT AND BALANCE:

Not affected.

ELECTRICAL LOAD DATA:

Not affected.

REFERENCES:

C-12-146-000/MF-001, Maintenance Manual
C-12-146-000/MY-001, Illustrated Parts Breakdown
C-12-146-000/MS-001, Standard Practices Manual
BHT-412CF-MM. Maintenance Manual
BHT-412CF-IPB, Illustrated Parts Breakdown
BHT-ALL-SPM, Standard Practices Manual
BHT-412CF-II-14, Installation Instruction SPS65(V)4
BHT-ELEC-SPM, Electrical Standard Practice Manual

PUBLICATIONS AFFECTED:

C-12-146-000/MY-001, Illustrated Parts Breakdown
BHT-412CF-IPB, Illustrated Parts Breakdown
BHT-412CF-II-14, Installation Instruction SPS65(V)4

ACCOMPLISHMENT INSTRUCTIONS:

PART I. Removal of the flexible tubing HCTE-1250-0 and securing of wire harness for helicopters listed in the **PART I** HELICOPTERS AFFECTED section.

-NOTE-

PART II of this Alert Service Bulletin may be accomplished concurrently with PART I.

1. Prepare the helicopter for maintenance.

2. Disconnect the helicopter battery.

3. Gain access to the flexible tubing (24, Figure 1 Section A-A).

-NOTE-

Use diagonal cutting pliers or scissors to cut the tube and tube end. Use of knife or similar tool can result in damage to wire insulation.

-NOTE-

Removed clamping hardware may be reused.

4. Remove and discard, if applicable, clamping hardware that secures flexible tubing (24) to the aircraft structure.

5. Remove and discard flexible tubing (24) by cutting the tube lengthwise. Inspect for any damaged wires inside tube, remove and replace, or repair any damage wires.

6. Locate and install standoff (30, Figure 1, Section B-B, Detail D) using adhesive (C-331) as per the instructions in BHT-ALL-SRM Chapter 3.

7. Locate and install insert (21, Figure 1, Section A-A, Detail C) using adhesive (C-317) as per the instructions in BHT-ALL-SRM Chapter 3.

-NOTE-

It is permissible to substitute a different size clamp, as required, to obtain the best fit.

-NOTE-

It is permissible to adjust hardware (spacers and screws) length, as required, to obtain sufficient clearance.

-NOTE-

Wire harnesses with less than 0.375 inch (9.53 mm) clearance to the structure (such as through a bulkhead routing hole), are to be protected by a grommet bonded to the structure. Refer to the Standard Practices Manual for additional information.

8. Secure wire harness to fuel line using screw (17, Figure 1, Section B-B, Section F-F) washer (1) clamp (16) spacer (6) clamp (31), washer (1) and nut (13).

9. Secure wiring harness using clamp (31, Figure 1, Section B-B, Section G-G) on previously installed standoff (30) using screw (3) and washer (1).

10. Secure wire harness on bulkhead STA 123.00 using screw (4, Figure 1, Section B-B), washer (1), and clamp (2).

11. Secure wire harness on existing insert, aft of STA 129.00 using screw (5, Figure 1, Section B-B) washer (1), clamp (2), spacer (6), and washer (1) between spacer (6) and the existing insert.

12. Secure wire harness on previously installed insert (21, Figure 1, Section B-B) using screw (5), washer (1), clamp (2), spacer (6) and washer (1), between spacer (6) and insert (21).

13. Install bracket (14, Figure 1, Section B-B, Detail J) using screw (3), washer (1) on existing insert.

14. Secure wire harness on the previously installed bracket (14) using screw (4), washer (1), clamp (2), washer (1) and nut (13).

15. Secure wire harness on fuel line using screw (10), washer (1), clamp (11), spacer (12), clamp (2), washer (1) and nut (13).

16. Secure wire harness using screw (4, Figure 1, Section B-B, Detail K), washer (1), clamp (2), bracket (15), washer (1), nut (13), screw (4), and washer (1) on existing nut.

17. Remove and discard existing bolt, and install Bracket (27, Figure 1, Section B-B, View L-L) using bolt (9) with existing nut, washer, and spacer.

18. Secure wire harness using screw (28), washer (1), clamp (2), on previously installed bracket (27), washer (1) and nut (13).

19. Install bracket (18, Figure 1, Section B-B, Detail M) on bulkhead STA 160.0 using screw (5), washer (1), spacer (7) and washer (1).

20. Secure wire harness on bulkhead STA 160.00 using screw (28) washer (1), clamp (2) on previously installed bracket (18), washer (1) and nut (13).

21. Install bracket (19, Figure 1, Section B-B, View N-N) on existing nut using screw (5), washer (1) and spacer (7).

22. Secure wire harness at STA 166.50 using screw (3), washer (1), clamp (2) and nut (13) on previously installed bracket (19).

23. Install plastic ties (23) on wire harness between support clamps as required.

24. Fill area between wire harness (22, Figure 1, Section B-B, Section E-E) and grommet (20) using sealant (C-308).

25. Connect helicopter battery.

26. Make an entry in the helicopter logbook and historical service records indicating compliance with PART I of this Alert Service Bulletin.

PART II. Removal of the flexible tubing 130-056C10-0970 and securing of wiring harness for helicopters listed in the **PART II** HELICOPTERS AFFECTED section.

-NOTE-

PART I of this Alert Service Bulletin must be accomplished prior to or concurrently with PART II.

1. Prepare the helicopter for maintenance.

2. Disconnect the helicopter battery.

3. Gain access to the flexible tubing (25, Figure 1 Section A-A).

-NOTE-

Use diagonal cutting pliers or scissors to cut the tube and tube end. Use of knife or similar tool can result in damage to wire insulation.

-NOTE-

Removed clamping hardware may be reused.

4. Remove and discard all clamping hardware that secures flexible tubing (25) to the aircraft structure.

5. Remove and discard flexible tubing (25) by cutting the tube lengthwise. Verify for any damaged wires inside tube, remove and replace any damage wires.

6. Locate and install qty 2 inserts (8, Figure 1, Section A-A, Detail C) using adhesive C-317 as per the instructions in BHT-ALL-SRM Chapter 3.

-NOTE-

It is permissible to substitute a different size clamp, as required, to obtain the best fit.

-NOTE-

It is permissible to adjust hardware (spacers and screws) length, as required, to obtain sufficient clearance.

-NOTE-

Wire harnesses with less than 0.375 inch (9.53 mm) clearance to the structure (such as through a bulkhead routing hole), are to be protected by a grommet bonded to the structure. Refer to the Standard Practices Manual for additional information.

7. Secure wire harness to fuel line by adding clamp (32, Figure 1, Section B-B, Section F-F) to existing clamping arrangement using existing hardware.

8. Secure wire harness to existing standoff by adding clamp (32, Figure 1, Section B-B, Section G-G) using existing hardware.

9. Secure wire harness, at STA 123.00 using screw (4, Figure 1, Section B-B) washer (1) and clamp (26).

10. Secure wire harness on previously installed inserts (8, Figure 1, Section B-B) and on qty 3 existing inserts using screw (5), washer (1), clamp (26), spacer (6) and washer (1), between spacer (6) and inserts.

11. Secure wire harness on existing angle bracket on strut assembly forward of STA 155.10 using screw (4, Figure 1, Section B-B, Detail H) washer (1), clamp (26), washer (1) and nut (13).

12. Secure wire harness on STA 155.10 using screw (3) washer (1) and clamp (26) on existing nut.

13. Secure wire harness on STA 160.00 using screw (28, Figure 1, Section B-B, Detail I) washer (1) clamp (29) on hydraulic line, clamp (26) on wire harness, washer (1) and nut (13).

14. Secure wire harness on STA 166.50, BL 0.00 using screw (3, Figure 1, Section B-B) washer (1) and clamp (26).

15. Secure wire harness on STA 178.00, BL 0.00 using screw (3, Figure 1, Section B-B) washer (1) and clamp (26).

16. Install plastic ties (23) on wire harness between support clamps as required.

17. Fill area between wire harnesses (22) and grommet (20) using sealant C-308 (Figure 1, Section B-B, Section E-E).

18. Connect helicopter battery.

19. Make an entry in the helicopter logbook and historical service records indicating compliance with PART II of this Alert Service Bulletin.

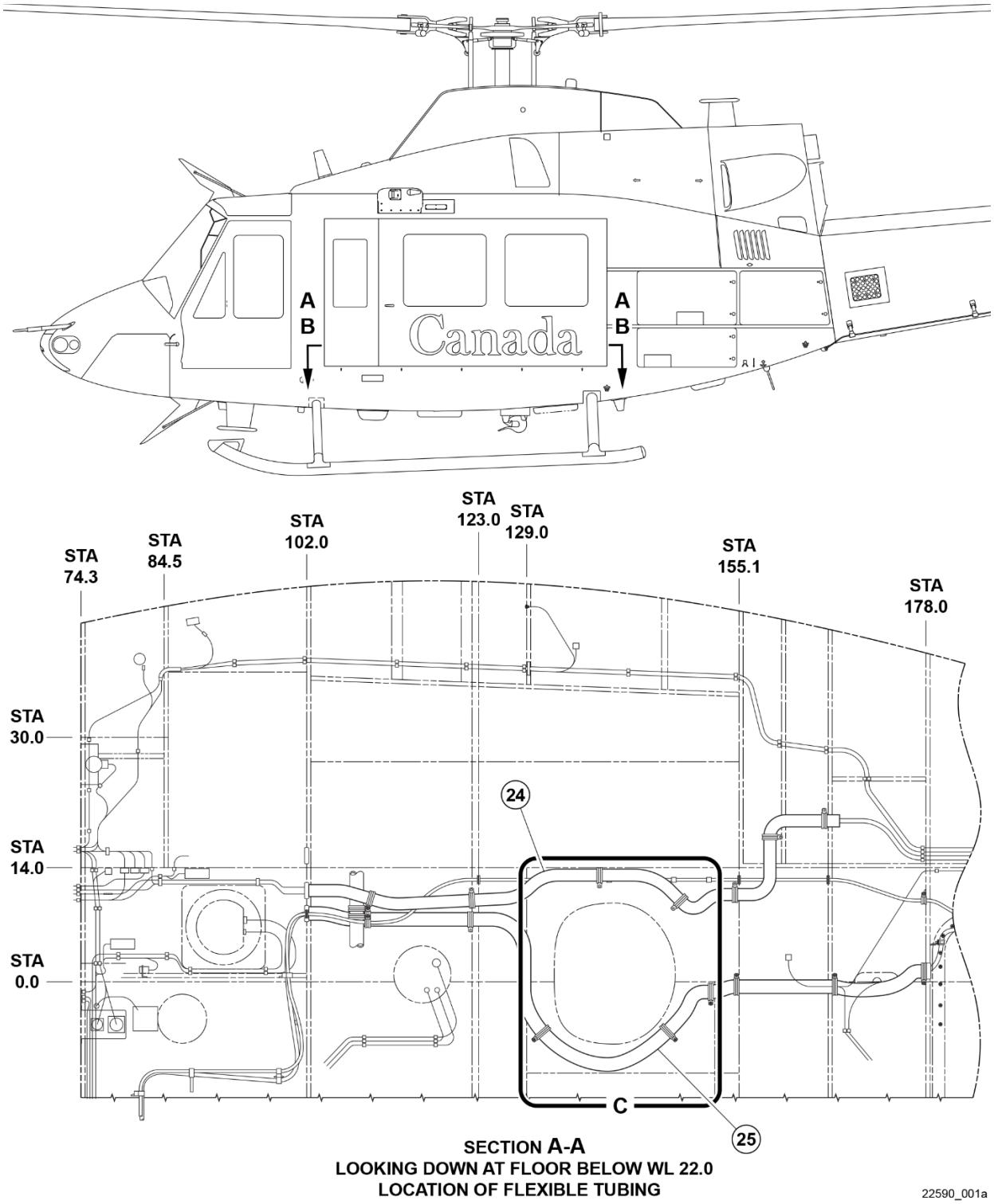

Figure 1 (Sheet 1 of 7)

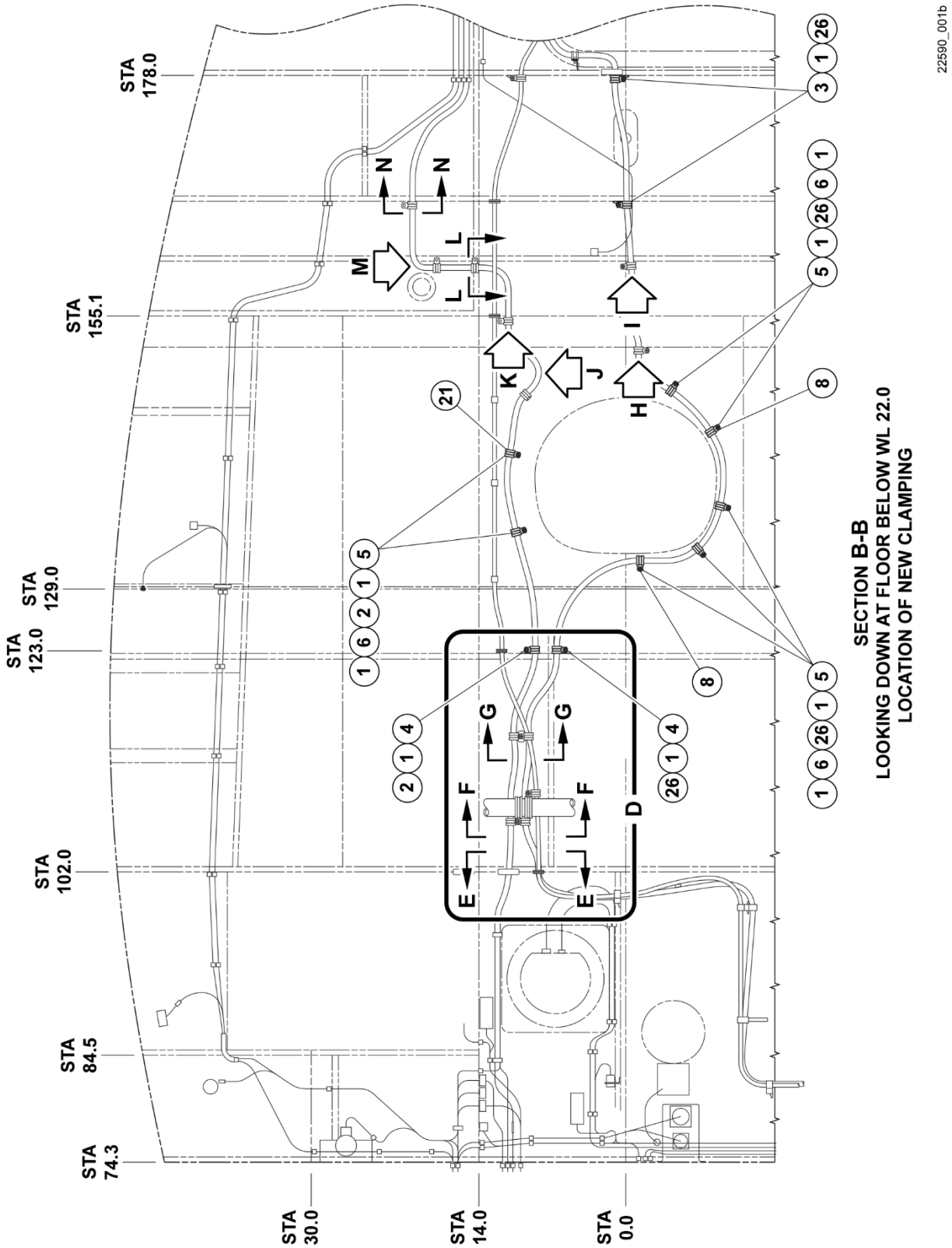

Figure 1 (Sheet 2 of 7)

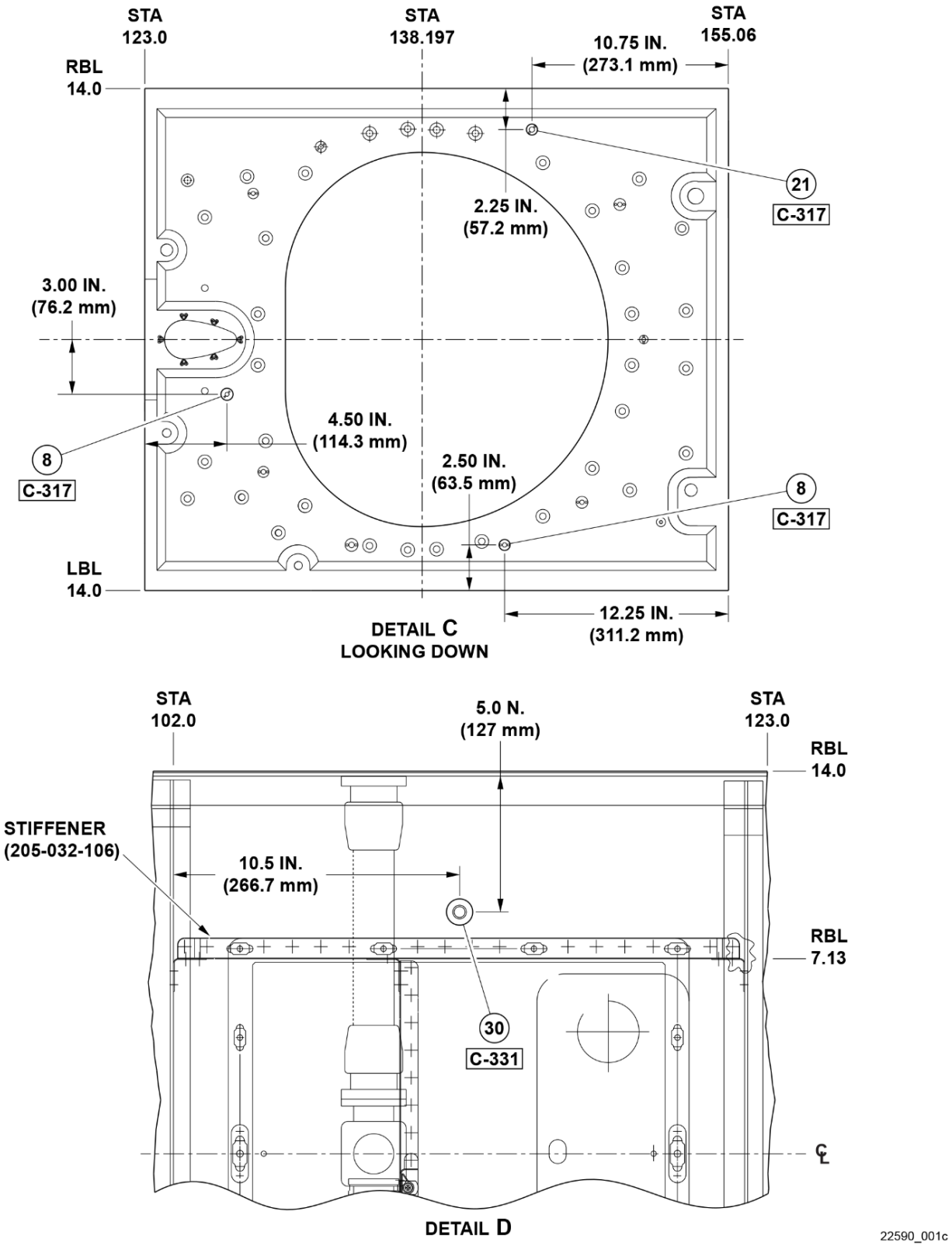

Figure 1 (Sheet 3 of 7)

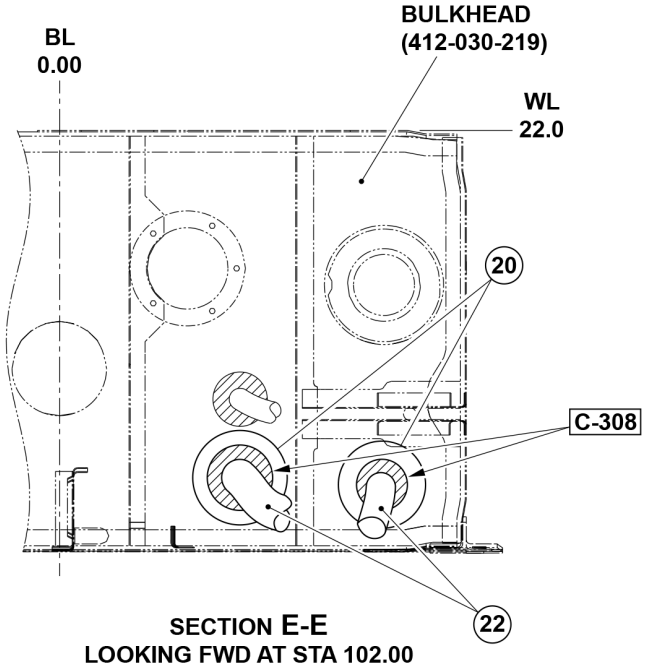

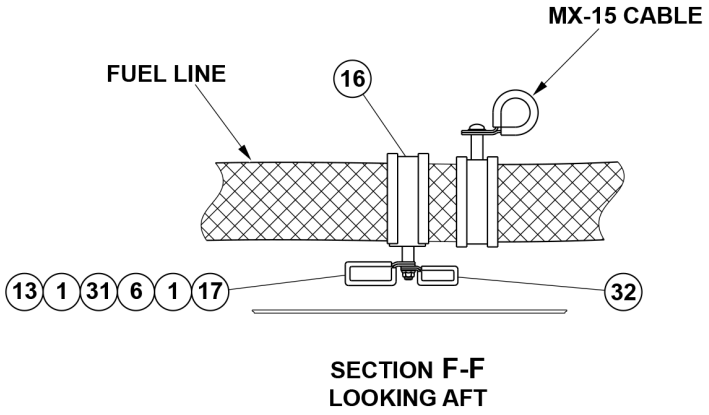

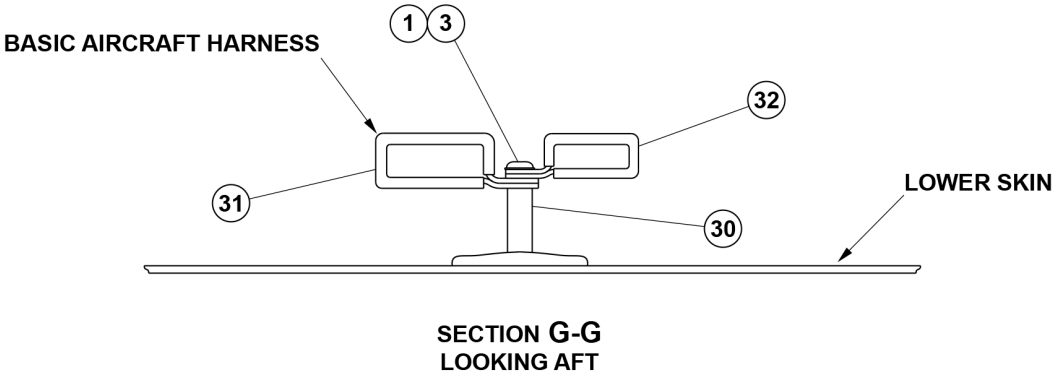

22590_001d

Figure 1 (Sheet 4 of 7)

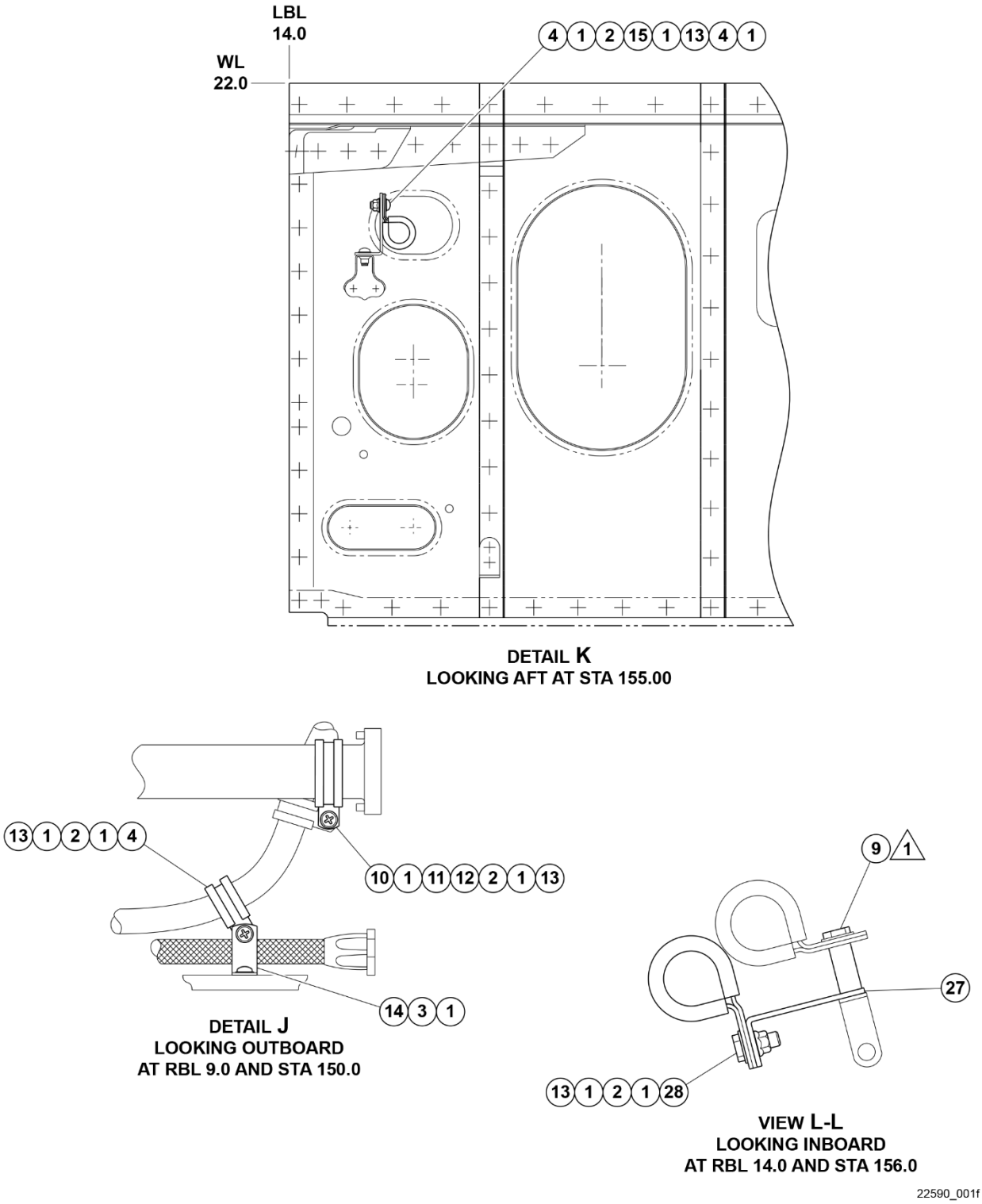

Figure 1 (Sheet 5 of 7)

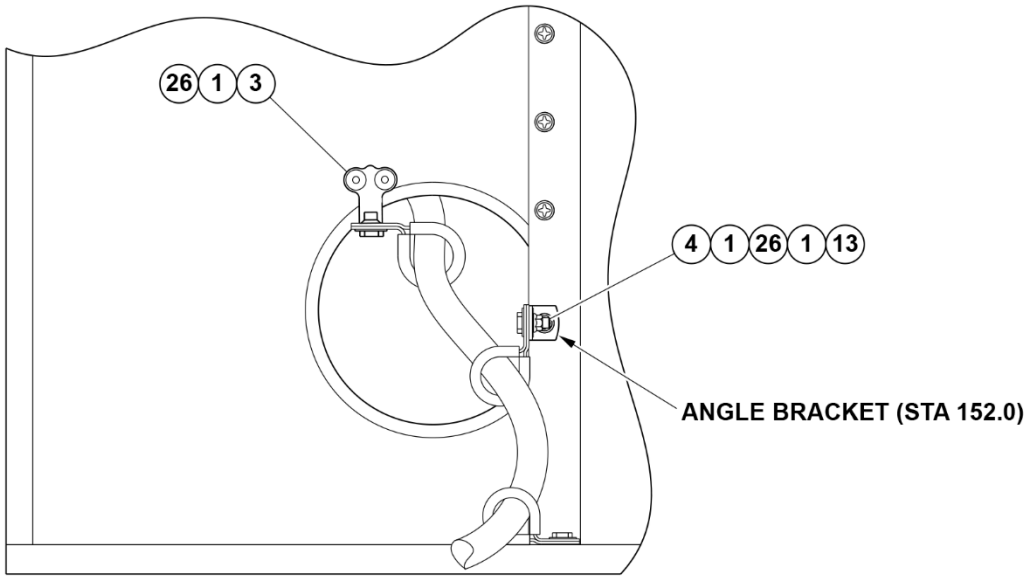

DETAIL H
LOOKING AFT AT STA 155.10

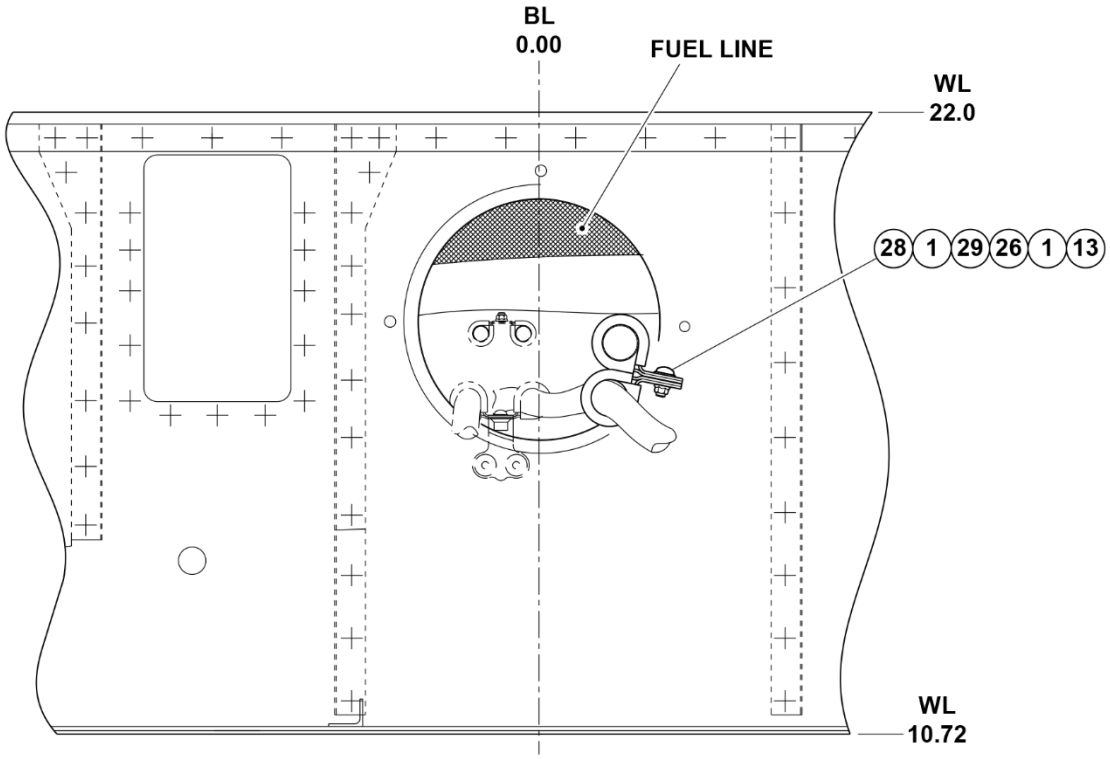

DETAIL I
LOOKING AFT AT STA 160.00

22590_001e

Figure 1 (Sheet 6 of 7)

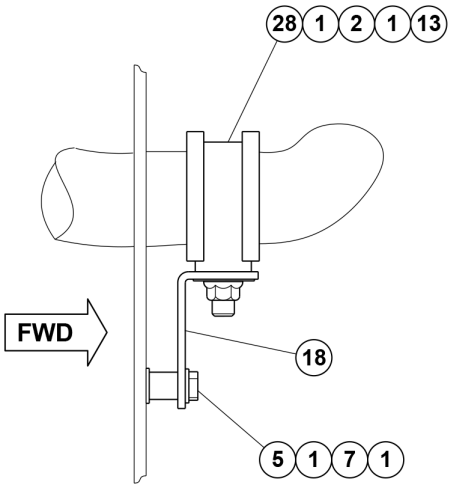

DETAIL M
LOOKING INBOARD
AT RBL 18.5 AND STA 160.0

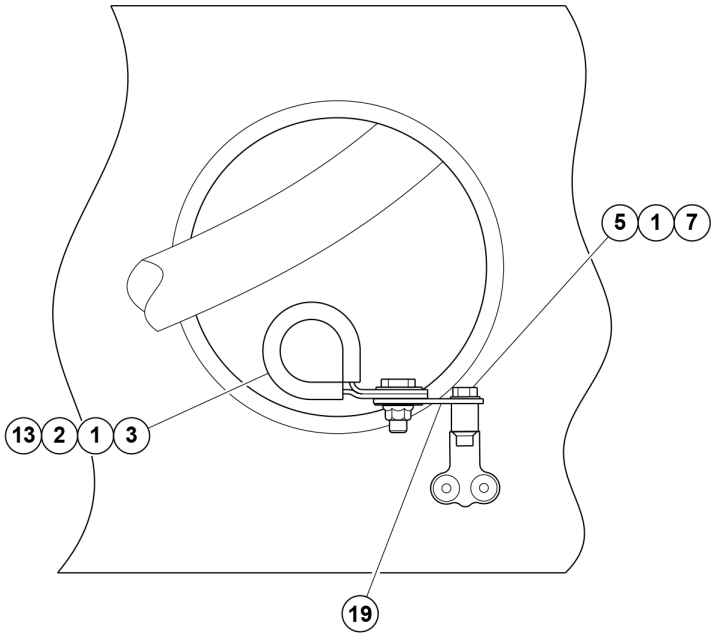

VIEW N-N
LOOKING AFT AT STA 166.5

1. Washer (NAS1149D0332J)
2. Clamp (AS21919WDG14Y)
3. Screw (NAS1801-3-7)
4. Screw (NAS1801-3-8)
5. Screw (NAS1801-3-12)
6. Spacer (NAS43DD3-32N)
7. Spacer (NAS43DD3-16N)
8. Insert (80-005-2-8)
9. Bolt (NAS6203-13)
10. Screw (NAS1801-3-22)
11. Clamp (AS21919WDG24Y)
12. Spacer (NAS43DD3-48N)
13. Nut (NAS9926-3L)
14. Bracket (MS9596-014)
15. Bracket (MS9596-144)
16. Clamp (Ref)
17. Screw (NAS1801-3-17)
18. Bracket (MS9596-024)
19. Bracket (MS9551-006)
20. Grommet (Ref)
21. Insert (80-005-2-8)
22. Wire Harness (Ref)
23. Plastic Ty (AS33671) (C-592)
24. Flexible Tubing (Ref)
25. Flexible Tubing (Ref)
26. Clamp (AS21919WDG11Y)
27. Bracket (MS9596-022)
28. Screw (NAS1801-3-9)
29. Clamp (AS21919WDG10Y)
30. Stand Off (120-229-3E12H)
31. Clamp (NAS1712D8-14N)
32. Clamp (NAS1712D6-12N)

NOTES

1. Remove existing bolt and discard. Reuse existing hardware (washer, spacer, and nut).

22590_001g

Figure 1 (Sheet 7 of 7)