BHT-205A1-MM-1

Bell MODEL 205A-1

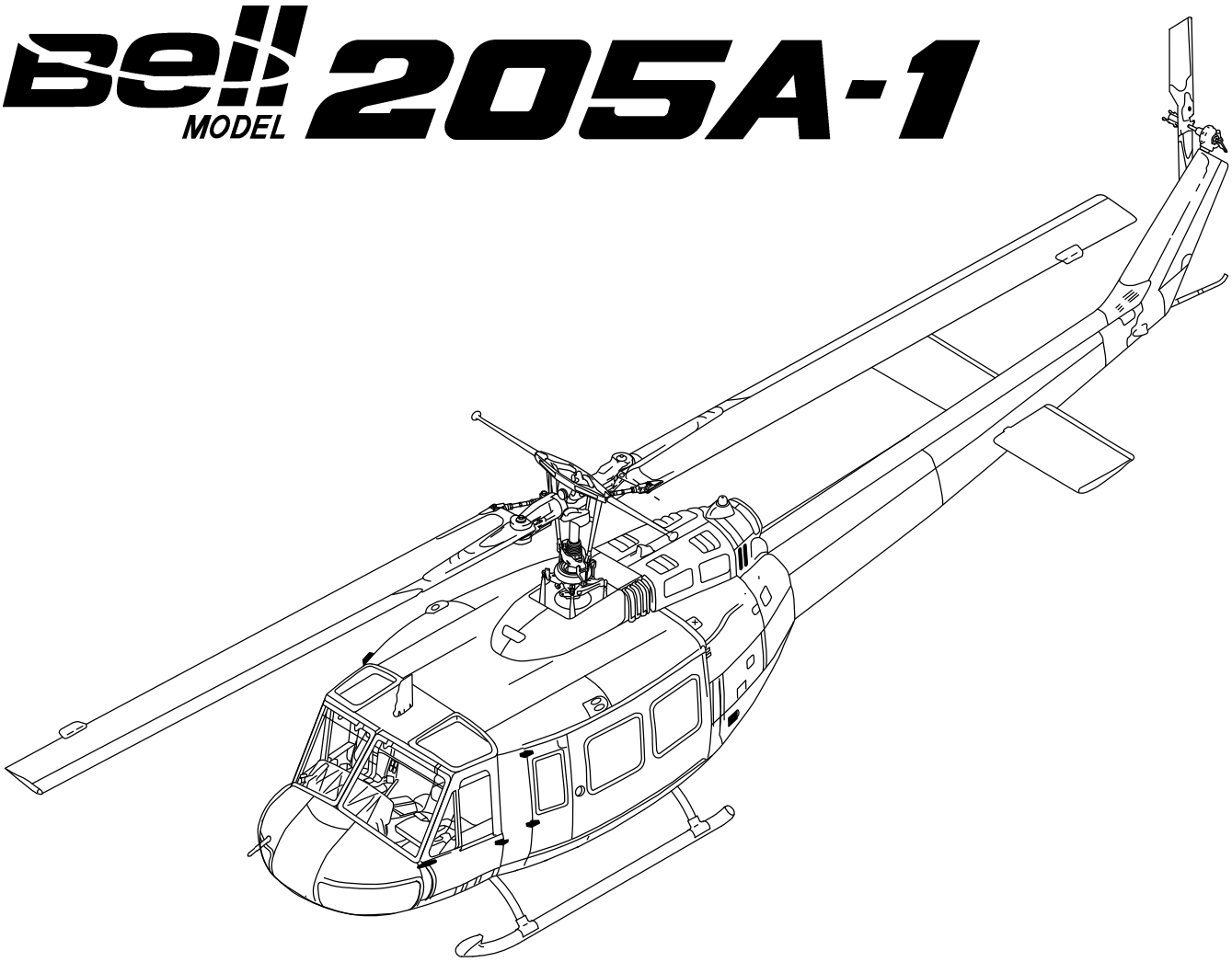

MAINTENANCE MANUAL

VOLUME 1

GENERAL INFORMATION

NOTICE

The instructions set forth in this manual, as supplemented or modified by Alert Service Bulletins (ASB) or other directions issued by Bell Helicopter Textron Inc. and Airworthiness Directives (AD) issued by the applicable regulatory agencies, shall be strictly followed.

COPYRIGHT NOTICE
COPYRIGHT 2016
BELL ® HELICOPTER TEXTRON INC.
AND BELL HELICOPTER TEXTRON
CANADA LTD.
ALL RIGHTS RESERVED

Bell Helicopter
A Textron Company
POST OFFICE BOX 482 • FORT WORTH, TEXAS 76101

REISSUE — 7 AUGUST 1990
REVISION 9 — 5 JULY 2016

Export Classification C, ECCN EAR99

Bell Helicopter
A Textron Company

PROPRIETARY RIGHTS NOTICE

These data are proprietary to Bell Helicopter Textron Inc. Disclosure, reproduction, or use of these data for any purpose other than helicopter operation or maintenance is forbidden without prior written authorization from Bell Helicopter Textron Inc.

DESTINATION CONTROL STATEMENT

WARNING — This document contains technical data whose export is restricted by the Arms Export Control Act (Title 22, U.S.C., Sec 2751, et. seq.) or the Export Administration Act of 1979, as amended, Title 50, U.S.C., App. 2401 et. seq. Violations of these export laws are subject to severe criminal penalties. Disseminate in accordance with provisions of DoD Directive 5230.25.

Additional copies of this publication may be obtained by contacting:
Commercial Publication Distribution Center
Bell Helicopter Textron Inc.
P. O. Box 482
Fort Worth, Texas 76101-0482

WARNING

THIS MANUAL APPLIES ONLY TO HELICOPTERS AND COMPONENTS MAINTAINED IN ACCORDANCE WITH BELL HELICOPTER TEXTRON (BELL) APPROVED PROCEDURES USING BELL APPROVED PARTS.

ALL INSPECTION, REPAIR AND OVERHAUL PROCEDURES PUBLISHED BY BELL, INCLUDING PART RETIREMENT LIFE, ARE BASED SOLELY ON THE USE OF BELL PARTS THAT HAVE BEEN MAINTAINED USING BELL APPROVED DATA. THE DATA PUBLISHED HEREIN OR OTHERWISE SUPPLIED BY BELL IS NOT APPLICABLE TO NON-BELL PARTS OR PARTS THAT HAVE BEEN REPAIRED USING DATA AND/OR PROCESSES NOT APPROVED BY BELL.

BELL IS NOT RESPONSIBLE FOR ANY PART OTHER THAN THOSE THAT IT HAS APPROVED.

BEFORE PERFORMING ANY PROCEDURE CONTAINED IN THIS MANUAL YOU MUST INSPECT THE AFFECTED PARTS AND RECORDS FOR EVIDENCE OF ANY MANUFACTURE, REPAIR, REWORK OR USE OF A PROCESS NOT APPROVED BY BELL.

IF YOU IDENTIFY OR SUSPECT THE USE OF PARTS NOT AUTHORIZED BY BELL, EITHER REMOVE THE AFFECTED ITEM FROM THE AIRCRAFT OR OBTAIN INSTRUCTIONS FOR CONTINUED AIRWORTHINESS FROM THE MANUFACTURER OR THE ORGANIZATION THAT APPROVED THE REPAIR.

CUSTOMER SUPPORT AND SERVICES

Flying smart means that no matter where you are, or what time it is, you can make a call and get additional information, clarification, or advice on a technical or operational issue concerning your helicopter or information contained in our Technical Publications. Product Support Engineering (PSE) is just a phone call away and may be contacted as follows:

Model 206 or 407

Phone: 450-437-2862 or 800-363-8023 (U.S./Canada)

Fax: 450-433-0272

E-mail: pselight@bh.com

Model 222, 230, 427, 429, or 430

Phone: 450-437-2077 or 800-463-3036 (U.S./Canada)

Fax: 450-433-0272

E-mail: pseinter@bh.com

Model 204, 205, 212, or 412

Phone: 450-437-6201 or 800-363-8028 (U.S./Canada)

Fax: 450-433-0272

E-mail: psemedium@bh.com

Model 210, HUEY II, and All Bell's Active and Surplus Military Medium Helicopter Models

Phone: 817-280-3548

Fax: 817-280-2635

E-mail: mts-medium@bh.com

Model OH-58, TH-67, TH-57, Both Active and Surplus Military

Phone: 817-280-3548

Fax: 817-280-2635

E-mail: mts-light@bh.com

For additional information on Customer Support and Services as well as Product Support Engineering (PSE) and your local Customer Service Engineering (CSE) network, please access http://www.bellhelicopter.com/support.

HELP

EVALUATE

LOGISTICS

PUBLICATIONS

Have you found something wrong with this manual — an error, an inconsistency, unclear instructions, etc.? Although we strive for accuracy and clarity, we may make errors on occasion. If we do and you discover it, we would appreciate your telling us about it so that we can change whatever is incorrect or unclear. Please be as specific as possible.

Your complaint or suggestion will be acknowledged and we will tell you what we intend to do.

You may use the enclosed Customer Feedback form, as applicable, to inform us where we have erred.

Your assistance is sincerely appreciated.

Export Classification C, ECCN EAR99

Bell Helicopter
A Textron Company

CUSTOMER FEEDBACK

Return by fax to Product Support Engineering (450) 433-0272, e-mail to publications@bh.com, or mail to the address on the next page.

Manual Title: _____

Manual Number (if assigned): _____

Date of Issue: _____

Date of Last Revision: _____

Section, Chapter, Paragraph Affected: _____

Your Feedback: _____

_____

_____

_____

Now Reads: _____

_____

_____

_____

Should Read: _____

_____

_____

_____

_____

Your Name: _____

Address: _____

_____

Position: _____ Telephone No.: _____

Company: _____ Fax No.: _____

Reference No. (your initials and date): _____

(If you choose to mail this form, fold in thirds with address exposed, tape and mail.)

Export Classification C, ECCN EAR99

TAPE HERE

From _____

_____

_____

POSTAGE
NECESSARY

Bell Helicopter
A Textron Company

Product Support Engineering
12,800 rue de l'Avenir
Mirabel, Québec, Canada, J7J 1R4

FOLD ON DOTTED LINES AND TAPE

Export Classification C, ECCN EAR99

TAPE HERE

IMPORTANT

HELICOPTER SALES NOTICE

Please complete this form and return by mail, e-mail (publications@bh.com), or fax (817-280-6466, Attention: CPDC). This will ensure that the new owners/operators receive updates to their ***Bell Helicopter Textron Technical Manuals*** and ***Bulletins.***

Model of Helicopter Sold or Purchased _____

Serial and Registration Number _____

Name of ***New Owner*** (company or individual) _____

Name of ***New Operator*** _____

Future Publications to be mailed to this address:

Address _____

City _____

State/Province _____

Zip/Postal Code _____

Country _____

Fax No. _____ Telephone No. _____

E-mail Address _____

Register for access to electronic publications at www.bellhelicopter.net

Export Classification C, ECCN EAR99

From _____

_____

_____

NO POSTAGE
NECESSARY
IF MAILED
IN THE
UNITED STATES

BUSINESS REPLY MAIL

FIRST CLASS PERMIT NO. 1744 FORT WORTH, TEXAS

Bell Helicopter

A Textron Company

COMMERCIAL PUBLICATION DISTRIBUTION CENTER
P.O. BOX 482
FORT WORTH, TEXAS 76101-0482

FOLD ON DOTTED LINES AND TAPE

TAPE HERE

Export Classification C, ECCN EAR99

SPARE PARTS WARRANTY

ONE YEAR/1,000 HOURS PRORATED

WARRANTY AND REMEDY: Seller warrants each new helicopter part or helicopter part reconditioned by seller to be free from defect in material and workmanship under normal use and service and if installed on Bell model helicopters. Seller's sole obligation under this warranty is limited to replacement or repair of parts which are determined to Seller's reasonable satisfaction to have been defective with 1,000 hours of operation or one (1) year after installation, whichever occurs first and reimbursement of reasonable freight charges. After 200 hours of use, there will be a prorated charge to the Purchaser for replacement parts (prorating the hours of total use against the then applicable part life or 2,000 hours, whichever is the lesser). Defective parts must be reported in writing to the Seller's Warranty Administration within 90 days of being found defective. Replacement of parts may be with either new or reconditioned parts, at Seller's election. Warranty adjustment is contingent upon the Purchaser complying with the Warranty Remedies as described in the Commercial Warranty Information brochure and the Seller's Warranty Administration disposition instructions for defective parts. Failure to comply with all of the terms of this paragraph may, at Seller's sole option, void this warranty.

NOTE: Parts, components and assemblies of all new helicopters may have been restored or reworked due to mars, blemishes, dents or other irregularities during the manufacturing process. Such restoration and/or rework is permitted under Seller's approved manufacturing and engineering processes and guidelines. The restoration and/or rework so completed does not render such items defective in material or workmanship.

THIS WARRANTY IS GIVEN AND ACCEPTED IN PLACE OF (i) ALL OTHER WARRANTIES OR CONDITIONS, EXPRESS OR IMPLIED, INCLUDING BUT NOT LIMITED TO THE IMPLIED WARRANTIES OR CONDITIONS OF MERCHANT ABILITY AND FITNESS FOR A PARTICULAR PURPOSE AND (ii) ANY OBLIGATION, LIABILITY, RIGHT, CLAIM OR REMEDY IN CONTRACTOR IN TORT (DELICT), INCLUDING PRODUCT LIABILITIES BASED UPON STRICT LIABILITY, NEGLIGENCE, OR IMPLIED WARRANTY IN LAW.

This warranty is the only warranty made by Seller. The Purchaser's sole remedy for a breach of this warranty or any defect in a part is the repair or replacement of helicopter parts and reimbursement of reasonable freight charges as provided herein. Seller excludes liability, whether as a result of a breach of contract or warranty, negligence or strict product liability, for incidental or consequential damages, including without limitation, damage to the helicopter or other property, costs and expenses resulting from required changes or modifications to helicopter components and assemblies, changes in retirement lives and overhaul periods, local customs fees and taxes, and costs or expenses for commercial losses or lost profits due to loss of use or grounding of helicopters or otherwise.

Seller makes no warranty and disclaims all liability in contract or in tort (delict), including, without limitation, negligence and strict tort (delictual) liability, with respect to work performed by third parties at Purchaser's request and with respect to engines, engine accessories, batteries, radios, and avionics, except Seller assigns each manufacturer's warranty to Purchaser to the extent such manufacturer's warranty exists and is assignable.

This warranty shall not apply to any helicopter part which has been repaired or altered outside Seller's factory in any way so as, in Seller's judgment, to affect its stability, safety or reliability, or which has been subject to misuse, negligence or accident, or which has been installed in any aircraft which has been destroyed unless that helicopter has been rebuilt by Bell. A list of destroyed aircraft is obtainable from Bell Product Support. Repairs and alterations which use or incorporate parts and components other than genuine Bell parts or parts approved by Bell for direct acquisition from sources other than Bell itself are not warranted by Bell, and this warranty shall be void to the extent that such repairs and alterations, in Seller's sole judgment, affect the stability, safety or reliability of the helicopter or any part thereof, or damage genuine Bell or Bell-approved parts. No person, corporation or organization, including Bell Customer Service Facilities, is authorized by Seller to assume for it any other liability in connection with the sale of its helicopters and parts.

NO STATEMENT, WHETHER WRITTEN OR ORAL, MADE BY ANY PERSON, CORPORATION OR ORGANIZATION, INCLUDING BELL CUSTOMER SERVICE FACILITIES MAY BE TAKEN AS A WARRANTY NOR WILL IT BIND SELLER.

Seller makes no warranty and disclaims all liability with respect to components or parts damaged by, or worn due to, corrosion. Seller makes no warranty and disclaims all liability for consumables (wear items) which are defined as items required for normal and routine maintenance or replaced at scheduled intervals shorter than the warranty period. "Consumables" include but are not limited to engine and hydraulic oil, oil filters, packings and o-rings, anti-corrosion and/or sealing compounds, brush plating material, nuts, bolts, washers, screws, fluids, compounds, and standard aircraft hardware that is readily available to aircraft operators from sources other than Seller.

All legal actions based upon claims or disputes pertaining to or involving this warranty including, but not limited to, Seller's denial of any claim or portion thereof under this warranty, must be filed in the courts of general jurisdiction of Tarrant County, Texas or in the United States District Court for the Northern District of Texas, Ft. Worth Division located in Ft. Worth, Tarrant County, Texas. In the event that Purchaser files such an action in either of the court systems identified above, and a final judgment in Seller's favor is rendered by such court, then Purchaser shall indemnify Seller for all costs, expenses and attorneys' fees incurred by Seller in defense of such claims. In the event Purchaser files such a legal action in a court other than those specified, and Seller successfully obtains dismissal of that action or transfer thereof to the above described court systems, then Purchaser shall indemnify Seller for all costs, expenses and attorneys' fees incurred by Seller in obtaining such dismissal or transfer.

January 2007

AIRWORTHINESS LIMITATIONS

TABLE OF CONTENTS

Paragraph Number	Title	Page Number
4-1	Airworthiness Limitations Schedule	4-3

FAA Approved

REVISION NO.	DATE OF SIGNATURE	F.A.A. APPROVED SIGNATURE
Revision 3	1 May 1996	

AIRWORTHINESS LIMITATIONS

4-1. AIRWORTHINESS LIMITATIONS SCHEDULE.

This schedule lists the maximum airworthiness life that various components may remain in service. A component shall be removed from service before the airworthiness life is exceeded.

Refer to appropriate Lycoming engine manual for power plant components airworthiness limitation schedule.

CAUTION: AIRWORTHINESS LIFE OF SOME KIT COMPONENTS IS NOT COVERED IN THIS SCHEDULE. REFER TO APPLICABLE SERVICE INSTRUCTIONS FOR KIT COMPONENTS SCHEDULE.

Airworthiness lives assigned to components are based upon experience, testing, and engineering judgment. Lives are subject to change at the sole discretion of Bell Helicopter Textron or an appropriate government agency.

WARNING: SOME PARTS ARE INSTALLED AS ORIGINAL EQUIPMENT ON BOTH MILITARY AND COMMERCIAL HELICOPTERS AND MAY HAVE A LOWER AIRWORTHINESS LIFE AND/OR OVERHAUL SCHEDULE WHEN USED ON A MILITARY HELICOPTER THAN WHEN USED ON A COMMERCIAL HELICOPTER. IN ADDITION, CIRCUMSTANCES SURROUNDING THEIR USE MAY CALL FOR OPERATION OF THE MILITARY HELICOPTER OUTSIDE OF THE APPROVED COMMERCIAL FLIGHT ENVELOPE. CONSEQUENTLY, PARTS THAT HAVE BEEN USED ON MILITARY HELICOPTERS SHOULD NOT BE USED ON COMMERCIAL HELICOPTERS.

Neither the assignment of an airworthiness life to a component nor failure to assign an airworthiness life constitutes a warranty of any kind. The only warranty applicable to the helicopter and any component is that warranty included in the Purchase Agreement for the helicopter or the component.

MANDATORY AIRWORTHINESS LIMITATIONS SCHEDULE

COMPONENT	PART NUMBER (1)	AIRWORTHINESS LIFE
	MAIN ROTOR COMPONENTS	
Blade	204-011-250-001	2500 hours
Blade	204-011-250-005	2500 hours
Blade	204-011-250-009	2500 hours
Blade	204-011-250-113	2500 hours
Grip	204-011-121-005	9000 hours
Grip	204-011-121-117	9000 hours
Drag Brace	204-011-140-001	2400 hours
Main Rotor Yoke	204-011-102 (All)	3600 hours
Main Rotor Yoke	212-011-102-105	10,000 hours (15)
Tension - Torsion Strap	204-012-112-005	1200 hours (4)
Inboard Strap Fitting	204-012-102-005	1200 hours (5)

MANDATORY AIRWORTHINESS LIMITATIONS SCHEDULE (Cont)

COMPONENT	PART NUMBER 1	AIRWORTHINESS LIFE
	MAIN ROTOR COMPONENTS (Cont)	
Inboard Strap Fitting	204-012-102-009	2400 hours 7
Outboard Strap Fitting	204-012-103-001	3000 hours
Strap Pin	204-012-104-005	2400 hours 8
Main Rotor Trunnion	204-011-105-001	15,000 hours or RIN = 300,000 16 17
Tension - Torsion Strap	204-012-122-001 & -005	1200 hours or 2 years, after initial ground run; whichever occurs first 9 15
Tension - Torsion Strap	204-310-101-101	1200 hours or 2 years, after initial ground run; whichever occurs first
Pillow Block	204-011-108-113	Conditional 6
Pillow Block Bushing	204-011-135-105	3600 hours
Pillow Block Bushing	204-011-135-003	2400 hours
	MAIN ROTOR CONTROLS	
Pitch Horn	204-011-120-005	3000 hours
Scissors	204-011-406-009	1000 hours
Swashplate Drive Link	204-011-407-001	9000 hours
Swashplate Support	204-011-404-005	1000 hours
Swashplate Support	204-011-404-009	1000 hours
Swashplate Support	204-011-404-017	1000 hours
Swashplate Support	204-011-404-121	1000 hours
Swashplate Support	204-011-404-125	1000 hours
Collective Lever	204-011-438-003	1000 hours
Collective Lever Pin	204-011-446-003	1000 hours

MANDATORY AIRWORTHINESS LIMITATIONS SCHEDULE (Cont)

COMPONENT	PART NUMBER 1	AIRWORTHINESS LIFE
	MAIN ROTOR CONTROLS (Cont)	
Stabilizer Bar Centerframe	204-011-307-001	10,000 hours
Stabilizer Bar Tube	204-011-328-001	2400 hours or 3 years, after initial ground run; whichever occurs first 10
Stabilizer Bar Tube	204-011-328-011	5000 hours or 5 years, after initial ground run; whichever occurs first 10
Mixing Lever	204-011-301-001	9000 hours
Mixing Lever	212-010-302-001	9000 hours
Mixing Lever	212-010-302-105	9000 hours
Collective Sleeve	204-011-408-003	9000 hours
Gimbal Ring	204-010-404-001	9000 hours
Swashplate Outer Ring	204-011-403-001	9000 hours
Scissors Hub	204-011-405-009	9000 hours
Scissors Hub	204-011-405-013	9000 hours
Scissors Tube	204-011-442-001	9000 hours
Scissors Tube	212-010-404-005	9000 hours
Pitch Link	204-011-127-001	9000 hours
	ELEVATOR CONTROL SYSTEM	
Elevator Assembly	205-030-856-035 & -037	4000 hours 11
	TAIL ROTOR AND CONTROLS	
Blade	204-011-702-015	1000 hours
Blade	204-011-702-019	1000 hours
Grip	204-011-728-013	300 hours 12
Grip	204-011-728-019	300 hours 12
Grip	205-011-711-101	2500 hours
Yoke	204-011-722-005	1000 hours

MANDATORY AIRWORTHINESS LIMITATIONS SCHEDULE (Cont)

COMPONENT	PART NUMBER 1	AIRWORTHINESS LIFE
	TAIL ROTOR AND CONTROLS (Cont)	
Blade	212-010-750-009	5000 hours
Blade	212-010-750-011	5000 hours
Blade	212-010-750-105	5000 hours
Yoke (Forging)	212-010-744-001	5000 hours
Yoke (Forging)	212-010-744-005	5000 hours
Yoke (Hog-Out)	212-010-704-001	5000 hours
Yoke (Hog-Out)	212-010-704-005	5000 hours
Yoke (Hog-Out)	212-010-704-107	5000 hours
Yoke	212-011-702-001	5000 hours
	POWER TRAIN DRIVE SYSTEM COMPONENTS	
Main Rotor Mast	204-011-450-007 & -105	15,000 hours or RIN = 300,000 16 17
Main Input Driveshaft	204-040-433-101	5000 hours
Spider	204-040-785-003	Conditional 13
Spider	412-040-785-101	2500 hours 14

MANDATORY AIRWORTHINESS LIMITATIONS SCHEDULE (Cont)

COMPONENT	PART NUMBER ⚠1	AIRWORTHINESS LIFE
	CONTROLS SYSTEM BOLTS	
Pitch Horn to Pitch Link (2)		1000 Hours
Pitch Link to Universal (2)		1000 Hours
Universal to Mixing Lever (2)		1000 Hours
Mixing Lever to Scissors Tube (2)		1000 Hours
Scissors Tube to Scissors (2)		1000 Hours
Scissors Pivot Bolt (2)		1000 Hours
Scissors to Drive Link (2)		1000 Hours
Drive Link to Rotating Swashplate (2 each)		1000 Hours
Fixed Swashplate to R/H Cyclic Boost Tube (1 each)		1000 Hours
Fixed Swashplate to L/H Cyclic Boost Tube (1 each)		1000 Hours
Collective Lever to Collective Boost Tube (1 each)		1000 Hours
Hydraulic Cylinder Tube to Swashplate Universal (2 each)		1000 Hours
Universal to Boost Tube (2 each)		1000 Hours
Universal to Hydraulic Cylinder (2 each)		1000 Hours
Hydraulic Cylinder to Lower Support (2 each)		1000 Hours
Gimbal to Inner Ring (2 each)		1000 Hours
Gimbal to Swashplate Support (2 each)		1000 Hours
Stabilizer Bar Pivot Bolts (2 each)		1000 Hours
Mixing Lever Pivot Bolts (4 each)		1000 Hours
Damper Tube to Damper Lever (2)		1000 Hours
Damper Tube to Stabilizer Bar (2)		1000 Hours
Collective Lever to Swashplate Support (2)		1000 Hours

MANDATORY AIRWORTHINESS LIMITATIONS SCHEDULE (Cont)

COMPONENT	PART NUMBER 1	AIRWORTHINESS LIFE
	STRUCTURES	
Longeron Assembly (Left Upper)	205-032-806-001 (only)	3000 hours
	LANDING GEAR	
Float crosstube	205-050-114-001, -003, -005, -007, and -009	500 hours
Float crosstube	205-050-114-011 and -013	1000 hours
Float crosstube	205-706-050-013	1000 hours
Float crosstube	205-050-114-023 and -025	Unlimited
	HYDRAULIC	
Piston Rod	41000547	1000 hours 2
Piston Rod	41004497	3000 hours 3

NOTES

1. Airworthiness lift for part number listed applies to all successive dash numbers for that component unless otherwise specified.

2. At the next scheduled overhaul, replace 41000547 piston rod (205-076-035-005 servo actuator) with new serialized 41004497 piston rod.

3. If required, limit strip and chrome plate of 41004497 piston rod (205-076-035-005 servo actuator) to a maximum of two times within 3000 hours.

4. Life reduced to 1200 hours and removed from service by 1 January 1979, per ASB 205-78-2.

5. Life reduced to 1200 hours and removed from service by 1 September 1978, per ASB 205-78-3.

6. An on-condition retirement is assigned to the 204-011-108-113 pillow blocks subject to passing a Fluorescent or Dye penetrant inspection every 2400 hours. Refer to Chapter 5.

7. Inboard strap fitting 204-012-102-009 replaces inboard strap fitting 204-012-102-005 per ASB 205-78-3.

8. Life reduced to 2400 hours per ASB 205-78-6.

MANDATORY AIRWORTHINESS LIMITATIONS SCHEDULE (Cont)

9 Life reduced from 2400 to 1200 hours/2 years per ASB 205-80-12. AD 80-17-09 was issued by the FAA to support this ASB.

10 Life reduced to 2400 or 3 years service per ASB 205-76-4. Life of -11 is 5000 hours/5 years based on improved corrosion protection.

11 Life reduced to 4000 hours per service bulletin 205-76-5.

12 Life reduced to 500 hours per service bulletin 205-05-73-4. FAA reduced life to 300 hours per AD 88-25-5.

13 An on-condition retirement is assigned to the 204-040-785-003 spider subject to passing a magnetic particle inspection every 3100 hours.

14 Spider 412-040-785-101 is superseded by spider 412-040-785-103. Spider 412-040-785-103 has an unlimited fatigue life.

15 Perform magnetic particle inspection of 212-011-102-105 yoke when 1200 hours or 2 year retention straps are changed, per ASB 205-94-60.

16 Retirement Index Number (RIN) is the retirement life based on fatigue damage from normal helicopter lifts and takeoffs. New components will begin with an accumulated RIN of zero that will be increased as lifts and takeoffs are performed. Operators must record the number of lifts and takeoffs and increase the accumulated RIN accordingly. When the maximum RIN or retirement flight hours is reached, whichever occurs first, the component will be removed from service.

17 Retire when the part has 15,000 flight hours or when the accumulated RIN = 300,000 (RIN LIFE). For manual tracking, increase the RIN count by 2 for each takeoff/lift recorded. If logging, increase the RIN count by 4 for each takeoff/lift recorded.

CHAPTER 5 — INSPECTIONS

TABLE OF CONTENTS

Paragraph Number	Title	Chapter/Section Number	Page Number
	INSPECTIONS		
5-1	General	5-00-00	3
5-2	Inspection Requirements	5-00-00	3
5-3	Crash Damage	5-00-00	4
5-4	Types of Inspections	5-00-00	4
5-5	Definitions	5-00-00	5
5-6	Inspection and Overhaul Tolerance	5-00-00	6
	SCHEDULED INSPECTIONS		
5-7	Scheduled Inspections	5-00-00	9
5-8	Daily Inspection	5-00-00	11
5-9	100 Hour Inspection	5-00-00	21
5-10	1000 Hour Inspection	5-00-00	31
	SPECIAL INSPECTIONS		
5-11	Special Inspections	5-00-00	33
5-12	Daily or Each 10 Hours of Flight Operation, Whichever Occurs First Until 250 Hours	5-00-00	35
5-13	Between 5 and 10 Hours of Flight After Each Installation	5-00-00	41
5-14	Each 8 Hours of Component Operation	5-00-00	43
5-15	Each 25 Hours of Component Operation	5-00-00	45
5-16	Each 25 Hours for the Next Four Inspections	5-00-00	51
5-17	Each 25 Hours of Component Operation or 15 Days, or Each 5 Days for Blades Operating in Salt Laden Atmosphere, Whichever Occurs First	5-00-00	53
5-18	100 Hours After Each Installation	5-00-00	55
5-19	Main Rotor Grip Ultrasonic Inspection	5-00-00	57
5-20	Each 300 Hours of Component Operation	5-00-00	59
5-21	Each 300 Hours or 3 Months of Component Operation, Whichever Occurs First	5-00-00	61
5-22	Each 500 Hours of Component Operation	5-00-00	63
5-23	Each 600 Hours/12 Months of Tail Rotor Driveshaft Coupling Operation	5-00-00	65
5-24	Each 600 Hours or 12 Months of Component Operation, Whichever Occurs First	5-00-00	67
5-25	Each 6 Months	5-00-00	69
5-26	Each 12 Months	5-00-00	71
5-27	Each 1000 Hours or 12 Months of Component Operation	5-00-00	73
5-28	First 1000 Hours of Component Time and Each 3000 Hours Thereafter of Component Time	5-00-00	75
5-29	Each 1200 Hours of Component Operation — Deleted	5-00-00	77
5-30	Each 1200 Hours or 24 Months, Whichever Comes First	5-00-00	79
5-31	Each 24 Months of Flight Control System Bolt Operation	5-00-00	83

TABLE OF CONTENTS (CONT)

Paragraph Number	Title	Chapter/Section Number	Page Number
5-32	Each 3000 Hours of Component Operation	5-00-00	87
5-33	Each 3100 Hours of Component Operation	5-00-00	89
	CONDITIONAL INSPECTIONS		
5-34	Conditional Inspections	5-00-00	93
5-35	Hard Landing	5-00-00	95
5-36	After Blade Strike or Other Rotating System Torque Spike	5-00-00	101
5-37	Deleted	5-00-00	109
5-38	Deleted	5-00-00	111
5-39	Overspeed	5-00-00	113
5-40	Overtorque	5-00-00	117
5-41	Compressor Stall or Surge	5-00-00	121
5-42	Lightning Strikes	5-00-00	125
5-43	Magnetic Compass Malfunction	5-00-00	133
	COMPONENT OVERHAUL SCHEDULE		
5-44	Component Overhaul Schedule	5-00-00	135

FIGURES

Figure Number	Title	Page Number
5-1	Inspection of Main Rotor Hub Grip Tangs and Barrel	20
5-2	Spiral Bevel Gear Serial Numbers	37
5-3	Inspection of Spiral Bevel Gear	38
5-4	Tail Rotor Blade — Special Inspection	49
5-5	Inspection of Main Rotor Hub Grip Tangs and Barrel (1200 Hours/24 Months)	82

TABLES

Table Number	Title	Page Number
5-1	Component Overhaul Schedule	135

INSPECTIONS

5-1. GENERAL

This chapter contains the requirements for the Scheduled, Special, and Conditional Inspections and a Component Overhaul Schedule.

WARNING

FAILURE TO CORRECT CONDITIONS SUCH AS, BUT NOT LIMITED TO, CORROSION, EROSION, MECHANICAL DAMAGE, OR OBVIOUS WEAR FOUND DURING A SCHEDULED INSPECTION COULD SERIOUSLY AFFECT THE AIRWORTHINESS OF THE HELICOPTER.

These inspection requirements constitute an approved inspection program for the Bell Helicopter Model 205A1.

The inspection intervals given in this chapter are the maximum permitted. Do not exceed these intervals. The owner/operator is responsible for increasing the scope and the frequency of the inspections as necessary. Make sure the helicopter is maintained safely during all unusual local changes, such as environmental conditions, helicopter use, etc. You can request changes to the requirements in this chapter through the local Aviation Authority.

The inspection intervals and the component overhaul schedule provided in this chapter are applicable only to Bell Helicopter Textron approved parts.

NOTE

The time period given for the overhaul of a component (or the failure to give a time period for the overhaul of a component) does not constitute a warranty of any kind. The only warranty applicable to the helicopter or any component is the warranty included in the Purchase Agreement for the helicopter or the component.

The Time Between Overhaul (TBO) and the inspection periods are determined through experience, tests, Lead The Fleet (LTF), or any other special programs and the judgement of Bell Helicopter Textron engineers. They are subject to change only by Bell Helicopter Textron or an approved Airworthiness Authority.

Changes to the TBO will be introduced by either revision to this chapter or a Technical Bulletin.

Every calendar and hourly inspection is a thorough visual inspection to determine the airworthiness of the helicopter and the components. Qualified persons must do the inspections in accordance with quality standard aircraft practices and the applicable maintenance manuals. Bell Helicopter Textron considers that it is mandatory to obey all the applicable Alert Service Bulletins (ASB) and the Airworthiness Directives (AD).

Component operating time records are necessary for components that have scheduled maintenance procedures, which are different from those of the airframe. It is the owner/operator's responsibility to keep the Historical Service Records (HSR) for the applicable component and to do the necessary maintenance procedures.

Before each inspection, remove or open the necessary cowlings, fairing, inspection doors, and panels.

5-2. INSPECTION REQUIREMENTS

This manual does not include specific inspections required by the FAA or other government regulatory authorities. These specific inspections are given by your government regulatory authority. Refer to their requirements for these specific inspections.

The owner/operator of the helicopter is responsible for the maintenance done on the helicopter. It is the owner.operator's responsibility to:

1. Establish, maintain, and review the log books for discrepancies.

2. Make sure the Alert Service Bulletins (ASB), the Airworthiness Directives (AD), and the special inspections are done when they are required to be done.

3. Make sure the scheduled inspections, the special inspections, and the required tests for all of the installed kits are complied with.

4. Make sure all parts and components for which Historical Service Records are required have documented traceability to their original installation in the helicopter.

WARNING

ALL PARTS REMOVED, DUE TO REACHING THEIR LIMITS OR AS A RESULT OF AN ACCIDENT/INCIDENT INSPECTION AND DEEMED UNAIRWORTHY, SHALL BE PERMANENTLY MARKED AS SCRAP OR PHYSICALLY DESTROYED TO THE EXTENT THAT THERE IS NO CHANCE OF REPAIR OR INSTALLATION ON ANY HELICOPTER OR COMPONENT.

5. Make sure all limited life parts that have completed their published operating limits are replaced.

6. Make sure all of the components that have completed their published overhaul periods are overhauled.

7. Make sure all of the maintenance that is done on the helicopter is done by an approved maintenance organization.

The maintenance organization/person doing the maintenance is responsible for the quality of the maintenance done.

The owner/operator may choose to ask the maintenance organization/person doing the maintenance to perform the tasks listed by prior arrangement through a separate formal agreement.

5-3. CRASH DAMAGE

Because of the many possible combinations that can result from crash damage, it is not possible to include the specific repair tasks in this category. The helicopter mechanic must make an analysis of the crash damage for each situation. Do the repair in accordance with the degree of damage to the specific part and the applicable repair procedures in this manual. Call Product Support Engineering with your analysis of the crash damage.

5-4. TYPES OF INSPECTIONS

1. The maintenance procedures may include scheduled inspections, special inspections, conditional inspections, component interim inspections, and component overhaul inspections.

a. Scheduled inspections must occur at specified operating intervals. The intervals may be in operating time (hours), cycles, torque events (RIN), calendar (days, months, years) or other assigned units. This makes sure that the helicopter is airworthy.

b. Special inspections are of a temporary nature or of a special interval that is not consistent with the scheduled inspections.

c. Conditional inspections do not occur at a specified time. A conditional inspection is the result of known or suspected unusual event, known or suspected malfunctions, or defects.

d. An interim inspection occurs between overhauls.

e. The component overhaul schedule gives the elapsed operating time at which a component must be removed, disassembled, examined for condition, and overhauled, in accordance with data approved by Bell Helicopter Textron.

2. Airworthiness limitations — Replace components in accordance with Airworthiness Limitations Schedule (Chapter 4).

3. Lubrication and servicing requirements are in addition to those stated in this chapter (Chapter 12).

4. For corrosion control refer to the Corrosion Control Guide, CSSD-PSE-87-001 and the BHT-ALL-SPM.

5. For the T53 Series engines, refer to the Lycoming Maintenance and Overhaul Manual for the scheduled inspection, special inspection, conditional inspection, and component overhaul schedule.

6. For the common Bell Helicopter Textron approved optional equipment that is integrated into this maintenance manual, refer to this chapter for the scheduled inspection, conditional inspection, component interim inspection, and component overhaul inspection.

7. For all other Bell Helicopter Textron approved equipment, refer to the applicable Service Instruction for the scheduled inspection, special inspection, conditional inspection, component interim inspection, and component overhaul inspection.

8. For the inspection requirements for optional equipment approved under Supplement Type Certificate (STC), refer to the applicable STC documentation. Maintenance and inspection of these items are the responsibility of the owner/operator.

5-5. DEFINITIONS

- Inspect, check, examine — Determine condition relative to an established standard.

- Condition — The state of being of an item as related to serviceable or unserviceable standard.

- Security — The presence of attaching parts that are properly tightened or appear to be, and the presence of properly installed (as required) locking devices such as lockwire, cotter pins, or other.

- Standard — An established rule or measure to determine condition.

- Damage — Physical deterioration whereby the standard renders the condition or an item acceptable or not acceptable for continuous use.

- Discard — Reject a component that has damage that cannot be repaired. To permanently remove from service.

- Preventive maintenance — Simple or minor preservation and the replacement of small standard parts not involving complex assembly operations.

- Maintenance — Inspection, overhaul, repair, preservation, and the replacement of parts, but excludes preventive maintenance.

- Operating time — Time required to be recorded in historical record sheets or helicopter logs. Operating time to be recorded may be identified as follows:

  - Time in service — Time from the moment a helicopter leaves the surface of the earth until it touches down at the next point of landing. Time during which the engine and rotor are turning with the helicopter on the ground is not taken into account.

  - Calendar time — Elapse time starts the day the inspection is accomplished, the component is installed, or the rotor is turned for the first time and ends on the last day of the month that the time limit expires. Calendar time shall be recorded without interruption. Removal of the component or storage of the helicopter etc. does not stop calendar time.

- Planned event — Occurrence of interval in which a specific action is to be taken as in the case of preventive maintenance, scheduled overhaul, or replacement in accordance with maximum airworthiness life guidelines.

- Lead The Fleet (LTF) Program — This is a program to validate the performance of an approved product improvement or a change to a maintenance interval. The engineering aspects of this change are approved. The program is closely monitored by Bell Helicopter Textron in an operational environment with selected operators.

- Special Programs — These are approved programs that may be initiated under certain special conditions to meet specific requirements. These programs will be clearly defined through a plan and the engineering and maintenance aspects will be approved by the regulatory authorities.

5-6. INSPECTION AND OVERHAUL TOLERANCE

WARNING

DO NOT APPLY THESE TOLERANCES TO PARTS WITH A LIMITED AIRWORTHINESS LIFE (CHAPTER 4).

The Bell Helicopter Textron approved tolerance for scheduled inspections, special inspections, interim inspections, and overhaul intervals, unless otherwise stated, is 10% or up to a maximum of 100 hours operating time/30 days calendar time, whichever is less. The tolerances are established for maintenance scheduling convenience only.

Scheduled inspections, special inspections, interim inspections, or overhaul intervals required beyond the stated tolerances must be approved by Product Support Engineering.

NOTE

The following is only applicable for those operators whose governing aviation authority requires to specifically approve the inspection and overhaul tolerance.

If approval of the inspection and overhaul tolerance is required by the applicable governing aviation authority, this is the responsibility of the owner/operator.

Refer to the Lycoming T53 Series Maintenance and Overhaul Manual for inspection and overhaul tolerances.

The following provides examples of when hourly, calendar, or hourly/calendar inspection tolerances have been applied:

Hourly Example (10% or up to a maximum of 100 hours, whichever is less):

300-HOUR INSPECTION DUE AT:	MAXIMUM ALLOWED TOLERANCE	INSPECTION CARRIED OUT AT:	NEXT 300-HOUR INSPECTION DUE AT:
3400 Hours	10% of 300 hours = 30 hours	3430 Hours (10% tolerance applied)	3730 Hours
3730 Hours	10% of 300 hours = 30 hours	3750 Hours (within 10% tolerance)	4050 Hours
4050 Hours	10% of 300 hours = 30 hours	4050 Hours (tolerance not applied)	4350 Hours

Calendar Example (10% or up to a maximum of 30 days calendar time, whichever is less):

12-MONTH INSPECTION DUE ON:	MAXIMUM ALLOWED TOLERANCE	INSPECTION CARRIED OUT ON:	NEXT 12-MONTH INSPECTION DUE ON:
June 10, 2010	10% of 12 months = ~~1.2 months~~ (maximum allowed is 30 days)	July 8, 2010 (within 30 day tolerance)	July 31, 2011 △1
July 31, 2011	10% of 12 months = ~~1.2 months~~ (maximum allowed is 30 days)	June 15, 2011 (completed early)	June 30, 2012 △1

Calendar Example (10% or up to a maximum of 30 days calendar time, whichever is less): (Cont)

12-MONTH INSPECTION DUE ON:	MAXIMUM ALLOWED TOLERANCE	INSPECTION CARRIED OUT ON:	NEXT 12-MONTH INSPECTION DUE ON:
June 30, 2012	10% of 12 months = ~~1.2 months~~ (maximum allowed is 30 days)	June 30, 2012 (tolerance not applied)	June 30, 2013 △1

NOTE:

△1 The last day of the month applies for the next inspection (paragraph 5-5, calendar time).

Hourly/Calendar Example (10% or up to a maximum of 100 hours operating time/30 days calendar time, whichever is less):

1200-HOUR/ 24-MONTH INSPECTION DUE AT:	MAXIMUM ALLOWED TOLERANCE	INSPECTION CARRIED OUT AT:	NEXT 1200-HOUR/ 24-MONTH INSPECTION DUE AT:
3400 Hours/ June 30, 2010	10% of 1200 hours = ~~120 hours~~ (maximum allowed is 100 hours) or 10% of 24 months = ~~2.4 months~~ (maximum allowed is 30 days)	3400 Hours/July 30, 2010 (within 30 day calendar tolerance)	4600 Hours/ July 31, 2012 △1
4600 Hours/ July 31, 2012	10% of 1200 hours = ~~120 hours~~ (maximum allowed is 100 hours) or 10% of 24 months = ~~2.4 months~~ (maximum allowed is 30 days)	4700 Hours/April 2, 2012 (100 hour tolerance applied)	5900 Hours/ April 30, 2014 △1
5900 Hours/ April 30, 2014	10% of 1200 hours = ~~120 hours~~ (maximum allowed is 100 hours) or 10% of 24 months = ~~2.4 months~~ (maximum allowed is 30 days)	5980 Hours/May 3, 2014 (within 100 hour and 30 day calendar tolerance)	7180 Hours/ May 31, 2016 △1

NOTE:

△1 The last day of the month applies for the next inspection (paragraph 5-5, calendar time).

SCHEDULED INSPECTIONS

5-7. SCHEDULED INSPECTIONS

Inspect helicopter daily, each 100 hours, and each 1000 hours of flight operation.

SCHEDULED INSPECTIONS

5-8. DAILY INSPECTION

DATA REFERENCE	INSPECTION TASK DESCRIPTION	INITIAL MECH	INITIAL OTHER
	DATE: _____ **W.O.** _____ **FACILITY:** _____ **HELICOPTER S/N:** _____ **REGISTRY NO.:** _____ **TOTAL TIME:** _____ **SIGNATURE:** _____ **GENERAL** All areas checked shall include a visual inspection for evidence of corrosion, particularly when helicopter is flown near or over salt water or in areas of high industrial emissions. **FORWARD FUSELAGE AREA** **1.** Battery for security. External connections for arcing and corrosion. Vent lines for obstructions, kinking, and security. **2.** Battery case and cover for damage and distortion. Mount bolts for security. **3.** Instrument tubing and wiring behind instrument panel for security and damage. **4.** Pitot tube for damage, security, and obstruction of ports. **5.** RPM warning box for damage. Wiring for fraying and loose connections. Cover plate for security. **6.** Rotor brake master cylinder for proper oil level. **7.** Rotor brake master cylinder for evidence of leaks. **8.** Windshield wiper motor for security. Wiring for chafing and fraying.		

SCHEDULED INSPECTIONS

5-8. DAILY INSPECTION (CONT)

DATA REFERENCE	INSPECTION TASK DESCRIPTION	INITIAL MECH	INITIAL OTHER
	9. External power receptacle for arcing and condition.		
	10. External power caution light switch for security and operation.		
	11. Navigation lights for damage and security.		
	12. Landing light for damage.		
	13. Searchlight for damage		
	14. Landing gear for excessive wear of skids and shoes, security for mountings of skids and crosstubes. Cracks and distortion, and excessive yielding of skid tubes and crosstubes.		
	15. Crosstube supports for slipping or moving.		
	16. Landing gear steps for peeling, missing, or worn nonslip coat (walkway coating compound).		
	17. Fuselage exterior structure for cracks, dents, corrosion, defective and missing rivets or screws.		
	PYLON AND POWER PLANT AREA		
	1. Stabilizer bar assembly for visible damage in the form of scratches, nicks, dents, cracks, corrosion, and excessively worn bearings.		
	2. Stabilizer tubes 204-011-328-001, -011 for cracks, paying particular attention to an area covering 360° and 1-1/2 inch outboard from vertical bolt 174-23A.		
	3. Main rotor drag braces for evidence of corrosion and security of attachment. Make a close visual examination of inboard end (grip end) of drag brace assembly for corrosion and/or cracks.		
Chapter 65	**4.** Main rotor blades for visible foreign object damage and security.		

SCHEDULED INSPECTIONS

5-8. DAILY INSPECTION (CONT)

DATA REFERENCE	INSPECTION TASK DESCRIPTION	INITIAL MECH	INITIAL OTHER
	5. Upper and lower main rotor blade surfaces for damage, evidence of corrosion, and cracks. Particular attention shall be given to the doubler area and all bond lines. Hairline cracks in the paint finish should be inspected closely for possible voids. **a.** Press test button on electronic detector unit (if installed). If cracked, indicator light will show a steady light. Flashing light indicates no cracks. **b.** Leading edge scarf joints for filler erosion, if splice cover is not installed. **6.** Main rotor reservoirs for proper oil level, evidence of leakage, and obvious contamination. **7.** Main rotor grips for evidence of corrosion and visible damage. Shield area for trapped contamination. Grip barrels for hairline cracks in both the leading and trailing sides of grip barrel (applicable to grip 204-011-121-005 only). Refer to Figure 5-1 for location. **8.** Main rotor hub static stops for obvious deformation and/or cracks. **9.** Main rotor yoke for general condition and security of pillow block assembly attachment, paying particular attention to the area surrounding the pillow block bushing bores. Visually inspect for sealant integrity around yoke to pillow block mating surface and around head and nut of yoke to pillow block attachment bolt. **10.** Main rotor pitch change links, damper tubes, and connecting links for scratches, nicks, dents, security of attachment, and obviously worn bearings. **11.** Pillow block bushing flange and outside area of bushing holes for evidence of cracks/corrosion. **12.** Obvious damage, particularly in the area of main rotor hub static stop contact area. **13.** Security of mast nut and mast. **14.** Mast seal for evidence of leakage.		

SCHEDULED INSPECTIONS

5-8. DAILY INSPECTION (CONT)

DATA REFERENCE	INSPECTION TASK DESCRIPTION	INITIAL MECH	INITIAL OTHER
	15. Stabilizer bar dampers for full fluid level and security of attachment.		
	16. Scissors and sleeve assembly for worn bearings and foreign object damage, condition, and security.		
	17. Scissor links to swashplate bolts for security of attachment. Make sure bolts are not bottomed out.		
	18. Swashplate assembly for worn bearings and foreign object damage.		
	19. Control lugs (3 each) on swashplate inner ring and (2 each) on swashplate outer ring for cracks.		
	20. Collective levers for security of attachment and foreign object damage.		
	21. Fuselage pylon structure for cracks, distortion, missing rivets. Transmission support for cracks, distortion, defective/ missing rivets. Lift beam assembly for cracks.		
	22. Antenna for security and corrosion.		
	23. Antenna coupler for security and damage.		
	24. Transmission for obvious damage, loose accessories, and fittings.		
	25. Transmission for oil leaks and proper oil level. Check oil sight gauge for discoloration or contamination. Service transmission if required.		
	26. Transmission external oil filter for bypass indication.		
Chapter 66	**27.** Main driveshaft boots or seals and surround area for evidence of grease leakage, and temperature indicator TEMP-PLATES on coupling for discoloration and overheat condition. A change in color of temperature indicator TEMP-PLATES (from white or light gray to black) indicates possible overheating and/or component degradation. Cause shall be determined and corrected prior to flight.		

SCHEDULED INSPECTIONS

5-8. DAILY INSPECTION (CONT)

DATA REFERENCE	INSPECTION TASK DESCRIPTION	INITIAL MECH	INITIAL OTHER
	28. Examine all transmission and gearbox inspection windows and sight glasses for cracking, crazing, and discoloration. If any of these conditions are present, the part must be removed and replaced prior to returning helicopter to service.		
	29. Web above input quill in main transmission case for cracks if web area has previously been reworked.		
BHT-205A1-CR&O-1, Chapter 66	**30.** Inspect rotor brake quill for interference between quill sleeve flange and rotor brake assembly. If contact exists, rework sleeve as outlined in BHT-205A1-CR&O-1, Chapter 66.		
	31. Rotor brake quill for condition, damage, and leaking.		
	32. Rotor brake for condition, damage, and security.		
BHT-205-SI-9	**33.** Rotor brake disc for warpage.		
Chapter 66	**34.** Transmission tail rotor drive quill coupling seals and surrounding area for evidence of grease leakage, and temperature indicator TEMP-PLATES for discoloration and overheat condition. A change in color of temperature indicator TEMP-PLATES from white or light gray to black indicates a possible overheat and/or component degradation. Cause of discoloration shall be determined and corrected prior to flight.		
	35. Refer to engine manufacturer's manual for power plant inspection requirements.		
	36. Starter-generator for security of mounting, burned or arced connections, and cooling air ducts for obstructions, kinking, and security.		
	37. Engine mounts for security and tubes for scratches, dents, cracks, and worn bearings.		
	38. Cowling for security. Loose or missing fasteners, cracks, and proper operation of cowl latches.		
	39. Electrical installation for worn or frayed cable bundles, loose or broken clamps or fasteners.		
	40. Fire extinguisher system for state of charge and security.		

SCHEDULED INSPECTIONS

5-8. DAILY INSPECTION (CONT)

DATA REFERENCE	INSPECTION TASK DESCRIPTION	INITIAL MECH	INITIAL OTHER
	41. Hydraulic reservoirs for proper oil level.		
Chapter 29 ASB 205-06-73-1	**42.** Hydraulic reservoir temperature indicator TEMP-PLATES for discoloration and overheat condition. A change in color of temperature indicator indicates possible overheating or component degradation.		
	43. Hydraulic servos for evidence of leaks.		
	44. Hydraulic lines for leaks and chafing.		
	AFT FUSELAGE/TAILBOOM AREA		
	NOTE For step 1 through step 3, a visual check is required of the tail rotor drive couplings temperature indicator TEMP-PLATES for discoloration and overheat condition. A change in color of temperature indicator TEMP-PLATES from white or light gray to black indicates a possible overheat condition and/or component degradation. Cause of discoloration shall be determined and corrected prior to flight.		
	1. Tail rotor driveshaft and tail rotor driveshaft hanger assemblies for security and obvious damage. Driveshaft hangers and surrounding area for evidence of grease leakage. Driveshaft hangers for discoloration and overheat condition. A multicolored appearance of hanger which darkens adjacent to the bearing indicates a possible overheat condition. The cause shall be determined and corrected prior to continued operation.		
Chapter 66	**2.** Intermediate gearbox for security and obvious damage and oil leakage. Input and output quill couplings and surrounding area for grease leakage. Oil for proper level. Inspect coupling indicator TEMP-PLATES for overheat condition. A change from white or light gray to black will indicate a possible overheat condition and/or component degradation. Cause of discoloration should be determined prior to continued operation. Refer to Chapter 66 for tail rotor drive system TEMP-PLATE conditions and corrective action.		

SCHEDULED INSPECTIONS

5-8. DAILY INSPECTION (CONT)

DATA REFERENCE	INSPECTION TASK DESCRIPTION	INITIAL MECH	INITIAL OTHER
	3. Tail rotor gearbox for security and obvious damage and oil leakage. Input quill coupling and surrounding area for grease leakage. Oil for proper level.		
Chapter 66	**4.** Inspect coupling temperature indicator TEMP-PLATES for overheat condition. A change from white or light gray to black will indicate a possible overheat condition and/or component degradation. Cause of discoloration should be determined prior to continued operation. Refer to Chapter 66 for tail rotor drive system TEMP-PLATE conditions and corrective action.		
	5. Tail rotor hub assembly for worn bearings, visible damage, and security of attachment.		
	6. Tail rotor hub bearing wear indicator for indication of trunnion bearing wear.		
	7. Tail rotor blades for physical condition, foreign object damage, and security of attachment.		
	8. Tail rotor hub and blade assembly installation hardware for security of attachment.		
	9. Forward spar of the vertical fin for cracks, loose or working rivets.		
	10. Covers for worn hinges, loose or working rivets.		
	11. Tail rotor driveshaft for damage.		
	12. Anti-collision light for damage and security.		
	13. Fire detector amplifier for damage and security. Exposed wiring for fraying and chafing.		
	14. Elevators for general condition, cracks, corrosion, and excessive play.		
	CABIN EXTERIOR AND INTERIOR		
	1. Cabin for evidence of damage, cracks, corrosion, loose fasteners, and general condition.		

SCHEDULED INSPECTIONS

5-8. DAILY INSPECTION (CONT)

DATA REFERENCE	INSPECTION TASK DESCRIPTION	INITIAL MECH	INITIAL OTHER
	2. Cabin doors for corrosion, damage, distortion, security, and freedom of operation. **3.** Cabin doorpost and forward crew door for cracks and cabin door seals for security and condition. **4.** Emergency escape panel mechanism locking pin for proper engagement and security. **5.** Emergency escape windows (passenger/cargo push out) for security and decals for legibility. **6.** Safety belts for condition, operation of release mechanism, and security. **7.** Windows and windshield for cracks, scratches, crazing, cleanliness, and optical distortion. Sliding windows for free operation, positive locking, and security. **8.** Fire extinguisher for security, condition, and state of charge. **9.** Interior lights for damage and security. **10.** Spare light bulbs available. **11.** Instruments for security. Range markings for accuracy and legibility. Cover glass for cracks, cleanliness, and alignment of slippage marks. **12.** Standby compass for leakage. Correction card for legibility. Mount for security. **13.** Altimeter for damage and security. Exposed wiring for chafing. Altimeter setting control for freedom of movement **14.** Radio transmitter and receiver for cleanliness, security, and broken or loose knobs. Controls for freedom of movement. **15.** All other accessible wiring and components for chafing, loose connections, and damage. **16.** Caution panel for damage to light segments. Switches for binding. Panel for security.		

SCHEDULED INSPECTIONS

5-8. DAILY INSPECTION (CONT)

DATA REFERENCE	INSPECTION TASK DESCRIPTION	INITIAL MECH	INITIAL OTHER
	17. Cyclic, collective, and anti-torque controls for visible damage, security, and for proper feel and response. **18.** Check for indications of "pop-up" red buttons on the integrated valve and filter assembly. (Indicator forward of pilot left foot.) **NOTE** Annotate completion of airworthiness check in logbook before flight. **19.** Helicopter documents for proper entries and location in helicopter.		

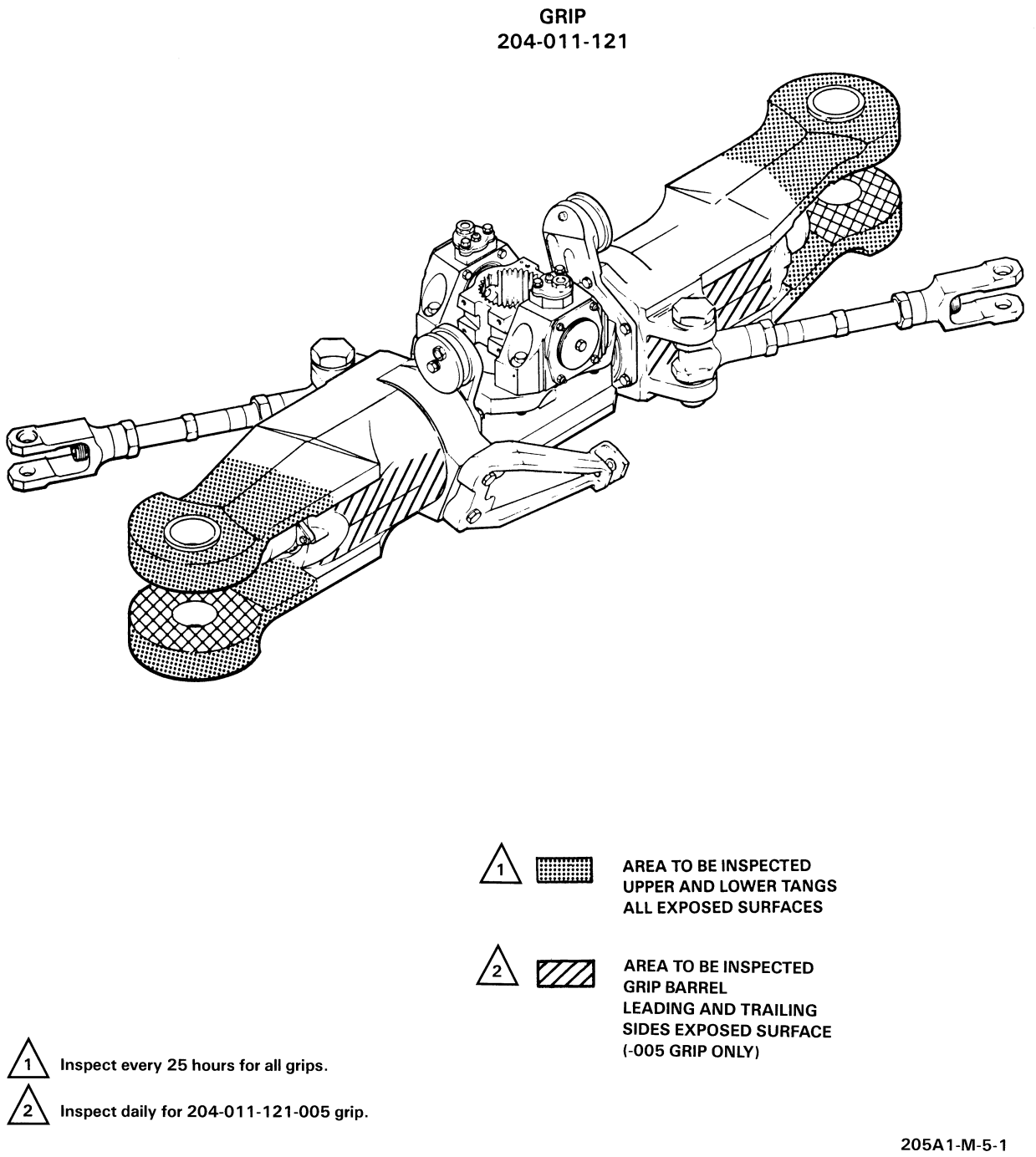

Figure 5-1. Inspection of Main Rotor Hub Grip Tangs and Barrel

SCHEDULED INSPECTIONS

5-9. 100 HOUR INSPECTION

DATA REFERENCE	INSPECTION TASK DESCRIPTION	INITIAL MECH	INITIAL OTHER
	DATE: _____ **W.O.** _____ **FACILITY:** _____ **HELICOPTER S/N:** _____ **REGISTRY NO.:** _____ **TOTAL TIME:** _____ **SIGNATURE:** _____ Accomplish complete daily inspection in conjunction with the following: **MAIN ROTOR** **1.** Main rotor blades for evidence of bond failure and leading edges for erosion. **2.** Main rotor pitch links for excessive radial or axial play in bearing. **3.** Scissors and sleeve assembly for condition and security. **PYLON** **1.** Stabilizer bar damper clamps for evidence of corrosion. **2.** Swashplate assembly for corrosion and gimbal ring for evidence of axial play. **3.** Collective levers for evidence of corrosion. **TAIL ROTOR** **1.** Tail rotor hub assembly for worn bearings. **2.** Tail rotor pitch change shaft bearing 212-010-762-1 for excessive wear.		

SCHEDULED INSPECTIONS

5-9. 100 HOUR INSPECTION (CONT)

DATA REFERENCE	INSPECTION TASK DESCRIPTION	INITIAL MECH	INITIAL OTHER
	3. Clean tail rotor blades to maintain improved visibility. **TRANSMISSION** **1.** Visually inspect main case for cracks in web above input quill. **NOTE** When three-micron filter element 204-040-760-105 is installed, oil need not be drained and element need not be replaced until 1/2 of the transmission Time Between Overhaul period or 12 months is reached. **2.** Drain transmission oil. Inspect and clean sump screen, internal filter, and chip detector. If metallic chips or particles are found, investigate to determine cause. Refer to transmission debris monitor, if installed. **3.** Replace 10-micron external filter element 204-040-760-013. **4.** Inspect for general condition, security, and evidence of oil leaks. **5.** Inspect oil lines and hoses for pin holes or cracks due to chafing. Inspect wire bundles and controls for chafing. **6.** Service transmission to proper oil level. **ENGINE ADAPTER FLANGE RETAINING BOLT** **NOTE** Not applicable to retaining bolt P/N 204-040-813-101. **1.** Carry out a torque check of the engine adapter flange retaining bolt 204-040-813-001 (160 to 200 inch-pounds (18.1 to 22.6 Nm)).		
Chapter 66 TB 205-81-41			

SCHEDULED INSPECTIONS

5-9. 100 HOUR INSPECTION (CONT)

DATA REFERENCE	INSPECTION TASK DESCRIPTION	INITIAL MECH	INITIAL OTHER
Chapter 66	**TRANSMISSION DEBRIS MONITOR** **1.** Remove full flow monitor from transmission sump case. **2.** Remove cup and screen tube from monitor. Visually inspect screen tube for contamination and non-magnetic debris. Inspect external surface of monitor and chip detectors for magnetic chips and particles. If contaminants, chips, or particles are found, investigate to determine cause and correction. **3.** Thoroughly clean screen tube and monitor with drycleaning solvent (C-304). Clean exterior surfaces of magnets with a clean cloth. Install screen tube with new packing, and torque. **4.** Connect electrical harness to monitor and short across magnets (2 places). Verify XMSN caution light illuminates for each magnet. **5.** Install monitor in sump case with new packing. **MAST ASSEMBLY** **1.** Inspect mast assembly for security, nicks, dents, and scratches. Pay particular attention to the area contacted by main rotor hub static stops. **2.** Inspect for evidence of oil leaks at mast bearing caps. **TAIL ROTOR DRIVE SECTION** **1.** Torque check intermediate gearbox attachment bolts. **2.** Torque check tail rotor gearbox retaining nuts. **NOTE** Intermediate gearbox 212-040-003-023 and tail rotor gearbox 212-040-004-009 have a 300 hour/12 month oil change interval. **3.** Drain oil from intermediate and tail rotor gearboxes. **4.** Remove, clean, and reinstall chip detectors.		

SCHEDULED INSPECTIONS

5-9. 100 HOUR INSPECTION (CONT)

DATA REFERENCE	INSPECTION TASK DESCRIPTION	INITIAL MECH	INITIAL OTHER
	5. Service intermediate and tail rotor gearboxes to proper oil level. **6.** Check condition of clamps for tail rotor shaft coupling to gearbox couplings. Inspect clamps for evidence of cracks in or near the bolt hole lugs. **7.** Externally examine shaft hanger bearings and shaft couplings for evidence of grease leakage. **TAILBOOM** **1.** Internal and external structure of tailboom and fin for cracks, distortion, corrosion, and security. **2.** Check tailboom attachment points for cracks and security. **3.** Remove plugs and check barrel nut bores for cracks. Check attachment bolt and barrel nut for no less than one and no more than two threads showing. **4.** Visually inspect all tailboom attach point fittings as follows: **a.** Remove the two dome lights in the baggage compartment and inspect upper tailboom attachment fittings and longerons. Using a bright light and mirror, inspect visible portions of attachment fittings for cracks. Give special attention to upper left attachment fitting, particularly in area of most forward rivets. Inspect longerons, left and right sides, from attachment fittings to aft bulkhead of baggage compartment for any evidence of corrosion. **b.** Remove three access doors on lower skin of tailboom baggage compartment to expose lower attachment fittings. Using a bright light and mirror, inspect visible portions of attachment fittings for any indications of cracking, particularly in area of most forward rivets. Inspect longeron left and right sides, from attachment fittings to aft bulkhead of baggage compartment for any evidence of corrosion. **c.** Visually inspect tailboom attachment point fittings, at bores of barrel nuts, for cracks. Be sure that no less than one, and no more than two threads protrude through the barrel nut.		

SCHEDULED INSPECTIONS

5-9. 100 HOUR INSPECTION (CONT)

DATA REFERENCE	INSPECTION TASK DESCRIPTION	INITIAL MECH	INITIAL OTHER
	d. Open access door on right side of fuselage and inspect the four tailboom attachment fittings on fuselage aft bulkhead for cracks, giving special attention to the area around tailboom attachment bolt and most aft fasteners. Give particular attention to inspection of lower left fitting. **e.** Any crack, corrosion, or bond separation is cause for immediate grounding of helicopter until problem is eliminated. **5.** Check tail rotor and synchronized elevator push-pull tubes for chafing. **6.** Check elevator and horn assembly for security, condition, and corrosion. **Every third 100 hour inspection (300 hours) or every 12 months:**		
ASB 205-90-39	**7.** Inspect tailboom joints, splices, longerons, attachment fittings, and attaching hardware for corrosion, damage, and cracks. **8.** Remove plug button at BS 99.00. **NOTE** Paint fissures are common in the splice area, cracks will be evident by black powder emanating from cracked area, and corrosion will leave evidence of white powder. **9.** Using a borescope or suitable means, inspect inside of longeron paying particular attention to cracking and/or corrosion in area of splice. **10.** Report any cracks to Product Support Engineering. **11.** Install plug button with sealant (C-308). **<u>PILOT AND PASSENGER COMPARTMENTS</u>** **1.** Check all safety equipment for inspection due dates and operation.		

SCHEDULED INSPECTIONS

5-9. 100 HOUR INSPECTION (CONT)

DATA REFERENCE	INSPECTION TASK DESCRIPTION	INITIAL MECH	INITIAL OTHER
	2. Check all heating and cooling ducts and controls for cracks, security, and operation.		
	3. Check cabin structure for cracks, loose rivets, and other damage.		
	FUSELAGE		
	1. Inspect friction dampers. Perform operational check. Move pylon fore and aft, using mast as lever. Check friction dampers for freedom of movement and smooth operation.		
	2. Repair or replace dampers found binding.		
	3. Inspect mounts, mounting brackets and structure for cracked or broken parts.		
	4. Inspect lift link and fitting for security and cracks.		
TB 205-76-10	**5.** Inspect main beam caps in accordance with TB 205-76-10.		
	ELECTRICAL		
	1. Check inverters for security of mounting and connections.		
	2. Check voltage regulator for damage and security of mounting and terminals.		
	3. Relays and main bus area for security of mounting and connections.		
	4. Bus insulation for damage and condition.		
BHT-205A1-MM-2	**5.** Operational check of cabin heater system, bleed air shutoff and line check valve. Refer to BHT-205A1-MM-2 for engine operational check of bleed air pressure valve.		
BHT-205A1-MM-2	**6.** Perform an operational check of transmission chip detector system.		

SCHEDULED INSPECTIONS

5-9. 100 HOUR INSPECTION (CONT)

DATA REFERENCE	INSPECTION TASK DESCRIPTION	INITIAL MECH	INITIAL OTHER
	7. Remove battery and perform reconditioning cycle in accordance with battery instruction manual. Install serviceable battery.		
	FLIGHT CONTROLS		
	1. Inspect all control rods for clearances, security, and general condition.		
Chapter 27	**2.** Inspect tail rotor and synchronized elevator control tubes for wear.		
	3. Check all controls for freedom of motion.		
	4. Collective stick for proper minimum friction. Check shoes and liners for excessive wear.		
	5. Inspect all anti-torque control tubes in tailboom for chafing and wear.		
Chapter 27	**ELEVATOR**		
	— Detailed Visual Inspection		
	1. Elevators for security, cracks, damage, loose or missing rivets, and corrosion.		
	2. Check elevator attachment lugs at each end of elevator horn for cracks and security of attachment. Check elevator horn to elevator spar attaching bolts and surrounding joints for cracks and security of attachment.		
	Every third 100 hour inspection (300 hours) or 12 months:		
	1. Check left and right elevator assemblies for excessive axial and radial play using a dial indicator mounted on the tailboom, with stylus touching inboard edge of elevator near attachment bolt for axial measurement, and touching upper surface near attachment bolt for radial measurement. Applying light force to move elevator in required direction, check that radial movement does not exceed 0.010 inch (0.254 mm), and that axial movement is within 0.005 to 0.030 inch (0.127 to 0.762 mm). Adjust shims as required.		

SCHEDULED INSPECTIONS

5-9. 100 HOUR INSPECTION (CONT)

DATA REFERENCE	INSPECTION TASK DESCRIPTION	INITIAL MECH	INITIAL OTHER
	2. Elevator rigging for proper setting and travel. **3.** Check elevator horn for security, mechanical damage, and corrosion. **4.** Trailing edge tabs and tip caps for condition and security. **Every sixth 100 hour inspection (600 hours) or 12 months:** **1.** Remove left and right elevators. **2.** Clean elevator spars and inspect for corrosion. **3.** Clean internal bore of elevator horn and inspect for corrosion. **4.** With elevator control removed, attach a spring scale to hole in arm of horn where control tube is normally installed. Pull scale at right angle to arm, verify friction is 26 to 32 pounds (115.65 to 142.34 N). If friction is not within limits, adjust shim thickness. **5.** Install left and right elevators. **HYDRAULIC SYSTEM** **1.** Inspect all lines, fittings, and hoses for security, kinks, general condition, and pitting. Pay particular attention to the condition of the hoses. **2.** Check hydraulic actuators for leakage and security. Clean exposed area of cylinder piston with hydraulic fluid and a lint-free cloth. **3.** Inspect pump for damage to finish and leakage. **4.** Check actuator attachment brackets for security, cracks, and corrosion in immediate area.		

SCHEDULED INSPECTIONS

5-9. 100 HOUR INSPECTION (CONT)

DATA REFERENCE	INSPECTION TASK DESCRIPTION	INITIAL MECH	INITIAL OTHER
Chapter 29	**5.** Check cyclic hydraulic cylinders piston rods for evidence of excessive wear or scoring. Wear of the piston rod indicates cylinder assembly is incorrectly aligned to lower supports and should be readjusted. Remove lower attachment bolt and check to assure no side loads have been induced into cylinder. (Refer to Chapter 29 for installation, alignment, and nut torque.)		
	POWER PLANT		
Chapter 71	**1.** Refer to engine manufacturer's manual for engine inspection requirements.		
Chapter 28	**2.** Replace main fuel filter element.		
Chapter 79	**3.** Replace engine external oil filter element.		
	INSTRUMENTS		
BHT-205A1-MM-2	**1.** Drain pitot-static system of any accumulated moisture. Leak check pitot-static system per local aviation authority requirements.		
	ENGINE FIRE EXTINGUISHER		
	1. Check for secure mounting of container, manifold, and wiring.		
	2. Check for correct charge at container indicator.		
	3. Check manifold, below engine, for cleanliness with special attention to discharge holes, and evidence of corrosion.		
	LUBRICATION REQUIREMENTS		
Chapter 12	**1.** Refer to Chapter 12 for lubrication requirements.		

SCHEDULED INSPECTIONS

5-10. 1000 HOUR INSPECTION

DATA REFERENCE	INSPECTION TASK DESCRIPTION	INITIAL MECH	INITIAL OTHER
	DATE: _____ **W.O.** _____ **FACILITY:** _____ **HELICOPTER S/N:** _____ **REGISTRY NO.:** _____ **TOTAL TIME:** _____ **SIGNATURE:** _____		
	1. Accomplish complete Daily and 100 Hour Inspections in conjunction with the following:		
	2. Remove and replace components as scheduled in component overhaul schedule (paragraph 5-44).		
	3. Remove, inspect, and clean or replace the hydraulic filters.		
	4. Calibrate fuel quantity system.		
Chapter 29	**5.** Remove hydraulic accumulator; disassemble, clean, and inspect for corrosion. Assemble and install.		
Chapter 28	**6.** Remove, clean, and reinstall ejector pumps in forward cells.		
	7. Check baggage smoke detection system. **a.** Check voltage reading to ground from pin D of plug (P282) in the fire detector amplifier. This voltage should not be more than 4 volts and should be read with a 20,000 ohm/volt voltmeter. Check actual operation of system by reducing light transmission around beacon light by 30 to 35%. **b.** Replace beacon light bulb in smoke detector unit.		
	8. Deleted.		

SCHEDULED INSPECTIONS

5-10. 1000 HOUR INSPECTION

DATA REFERENCE	INSPECTION TASK DESCRIPTION	INITIAL MECH	INITIAL OTHER
Chapter 65	**9.** Inspect swashplate and support assembly 204-011-400-17 and subsequent, and scissors and sleeve assembly 204-011-401-019 and subsequent. Disconnect bottom of each drive link from swashplate trunnion and each mixing lever control tube from scissors. Check swashplate duplex bearing and collective sleeve hub bearing set for roughness and ease of rotation. Purge lubricate bearings. Reconnect drive links and tubes. (Refer to Chapter 65 for maintenance instructions.) **10.** Inspect cyclic and collective flight control cylinder installations as follows: **a.** Inspect universal bearings for looseness. **b.** Inspect input lever bushings and bolts for wear and looseness. **c.** Retighten nuts attaching cylinders to upper supports. **d.** Inspect fasteners attaching cyclic cylinder lower supports to structure for looseness. **e.** Inspect cyclic cylinder lower bearings for looseness. **f.** Remove bolts attaching cyclic cylinders to lower supports. Check alignment of cylinders to lower supports. No side loads should exist on rod end bearings. **g.** Inspect cylinder extension tubes and dust boots for condition and security. **h.** Inspect linkage for wear and security.		

SPECIAL INSPECTIONS

5-11. SPECIAL INSPECTIONS

Perform applicable special inspection of helicopter:

1. Daily inspection.

2. Daily or each 10 hours of flight, whichever occurs first until 250 hours.

3. Between 5 and 10 hours of flight after each installation.

4. Each 8 hours of component operation.

5. Each 25 hours of component operation.

6. Each 25 hours for the next four inspections.

7. 25 hours of component operation or 15 days, or each 5 days for blades operating in salt laden atmosphere.

8. 100 hours after each installation.

9. Main Rotor Grip Ultrasonic Inspection.

10. Each 300 hours of component operation.

11. Each 300 hours or 3 months of component operation, whichever occurs first.

12. Each 500 hours of component operation.

13. Each 600 hours/12 months of tail rotor driveshaft coupling operation.

14. Each 600 hours or 12 months of component operation, whichever occurs first.

15. Each 6 months.

16. Each 12 months.

17. Each 1000 hours or 12 months of component operation.

18. First 1000 hours of component time and each 3000 hours thereafter of component time.

19. Deleted.

20. Each 1200 hours or 24 months, whichever occurs first.

21. Each 24 months of flight control bolt operation.

22. Each 3000 hours of component operation.

23. Each 3100 hours of component operation.

SPECIAL INSPECTIONS

5-12. DAILY OR EACH 10 HOURS OF FLIGHT OPERATION, WHICHEVER OCCURS FIRST UNTIL 250 HOURS

DATA REFERENCE	INSPECTION TASK DESCRIPTION	INITIAL MECH	INITIAL OTHER
	DATE: _____ W.O. _____ **FACILITY: _____** **HELICOPTER S/N: _____** **REGISTRY NO.: _____** **TOTAL TIME: _____** **SIGNATURE: _____** **NOTE** Accomplish daily or each 10 hours flight operation, whichever occurs first until 250 hours, on transmission with affected gears with 50 hours or more.		
Chapter 66 ASB 205-89-32	**SPIRAL BEVEL GEAR 204-040-701-103** — Inspect **NOTE** This inspection is only applicable to transmissions/ helicopters with the spiral bevel gears, shown in Figure 5-2, installed. **1.** Remove and inspect the transmission internal sump filter for metal contamination. If metal contamination is evident, notify Product Support Engineering of spiral bevel gear serial number, hours, and type of contamination. **2.** Every 50 hours (until 250 hours), visually inspect spiral bevel gear. **a.** Remove quill pad cover 204-040-174-001 or rotor brake quill from transmission.		

SPECIAL INSPECTIONS

5-12. DAILY OR EACH 10 HOURS OF FLIGHT OPERATION, WHICHEVER OCCURS FIRST UNTIL 250 HOURS (CONT)

DATA REFERENCE	INSPECTION TASK DESCRIPTION	INITIAL MECH	INITIAL OTHER
	b. Utilizing port opening in main gear case and a bright light and mirror, inspect all 62 teeth in spiral bevel gear 204-040-701-103. Carefully inspect each tooth for evidence of chipping or loss of material (Figure 5-3). **c.** Remove and replace any gear not meeting inspection requirements set forth in step b. Notify Product Support Engineering of serial number and total time of any gear replaced. **d.** Install quill pad cover or rotor brake quill. **3.** Spare (uninstalled) affected spiral bevel gears. **a.** Return spare affected serial numbered spiral bevel gears to Bell Helicopter Textron for inspection and reidentification. Refer to Information Letter (IL) GEN-04-98 for shipping instructions.		

A-3819	A-3896	A-4085	A-4243	A-4368
A-3821	A-3897	A-4087	A-4244	A-4369
A-3825	A-3899	A-4089	A-4245	A-4370
A-3826	A-3901	A-4090	A-4254	A-4371
A-3829	A-3911	A-4091	A-4266	A-4372
A-3833	A-3915	A-4092	A-4267	A-4374
A-3834	A-3916	A-4093	A-4274	A-4376
A-3836	A-3919	A-4094	A-4275	A-4377
A-3838	A-3920	A-4095	A-4280	A-4378
A-3840	A-4008	A-4096	A-4282	A-4379
A-3845	A-4014	A-4097	A-4288	A-4380
A-3847	A-4017	A-4098	A-4289	A-4383
A-3848	A-4019	A-4107	A-4290	A-4385
A-3850	A-4020	A-4108	A-4303	A-4386
A-3855	A-4021	A-4109	A-4319	A-4387
A-3856	A-4027	A-4147	A-4320	A-4394
A-3857	A-4029	A-4184	A-4325	A-4395
A-3858	A-4068	A-4186	A-4327	A-4397
A-3861	A-4069	A-4187	A-4328	A-4400
A-3878	A-4071	A-4188	A-4329	A-4401
A-3880	A-4075	A-4191	A-4332	A-4403
A-3885	A-4077	A-4192	A-4333	A-4411
A-3886	A-4078	A-4193	A-4334	A-4417
A-3889	A-4079	A-4213	A-4335	A-4418
A-3891	A-4080	A-4233	A-4336	A-4428
A-3892	A-4081	A-4235	A-4337	
A-3893	A-4083	A-4236	A-4358	
A-3895	A-4084	A-4241	A-4366	

NOTE

Spiral bevel gears with the suffix "R" after the serial number are acceptable for service.

212_MM_05_0010+

Figure 5-2. Spiral Bevel Gear Serial Numbers

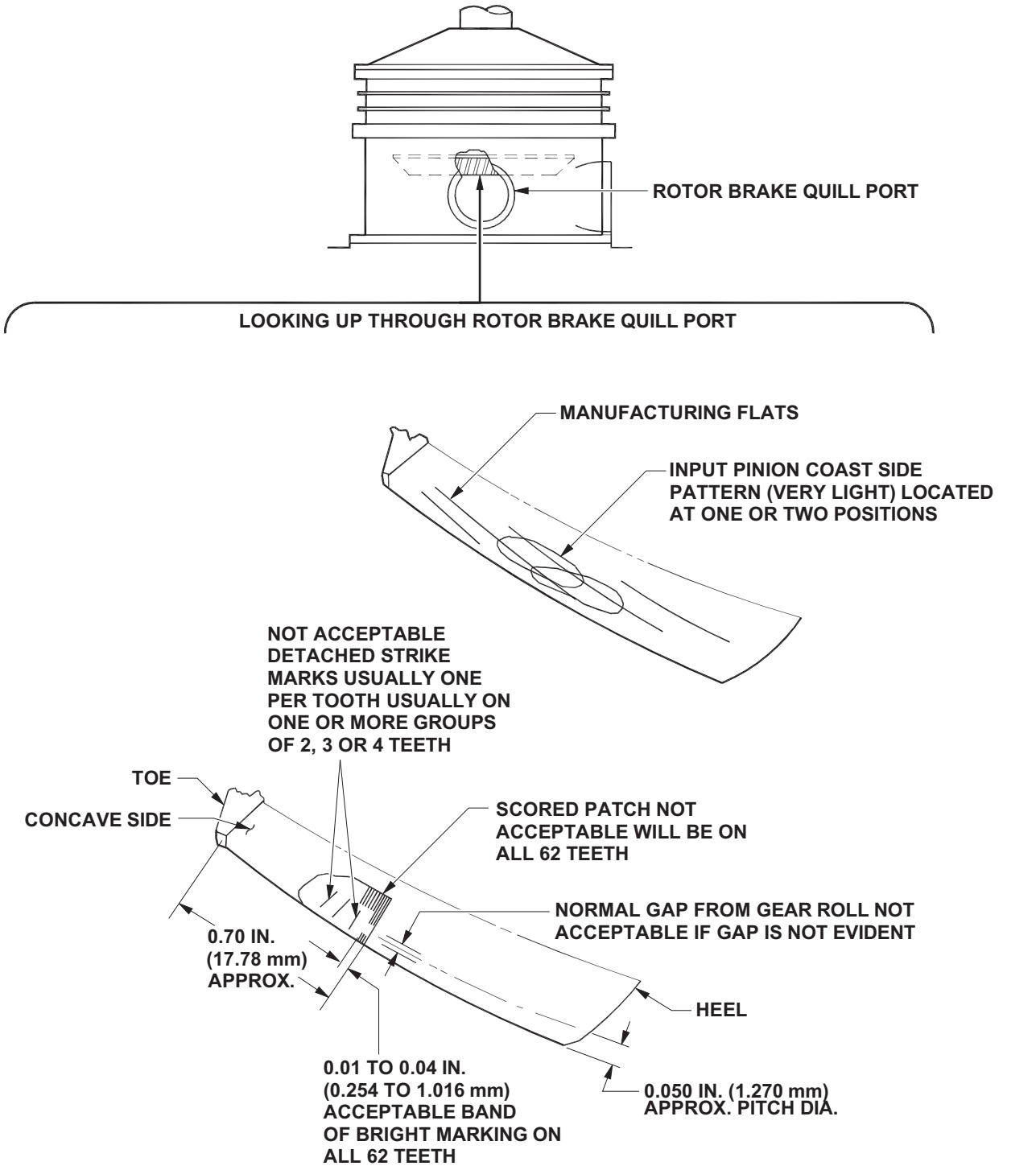

Figure 5-3. Inspection of Spiral Bevel Gear (Sheet 1 of 3)

REGISTRATION NO._____

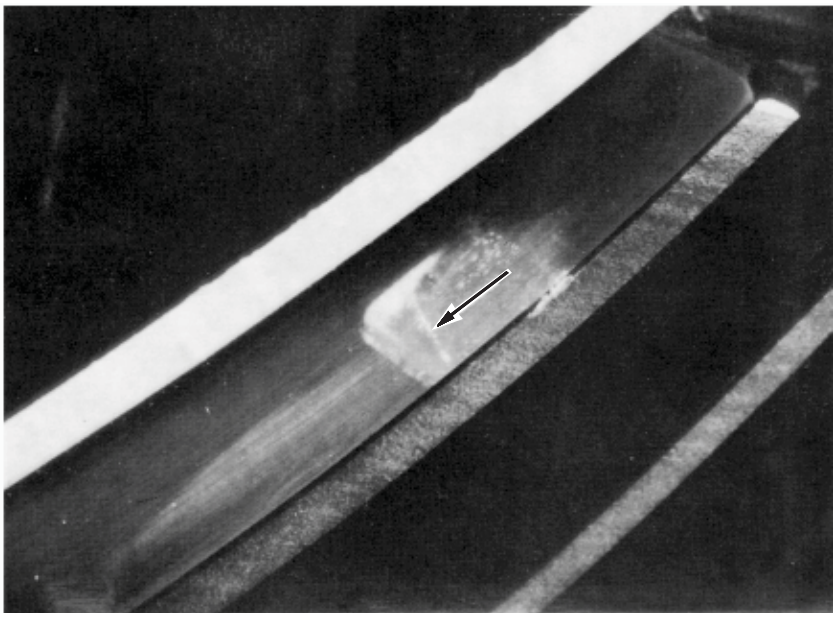

SPIRAL BEVEL GEAR (204-040-701) UNACCEPTABLE PATTERN

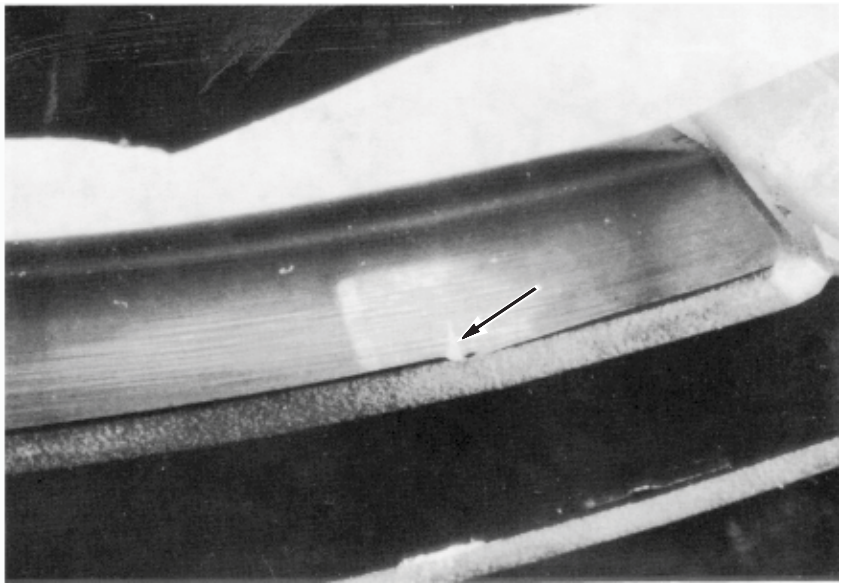

SPIRAL BEVEL GEAR (204-040-701) UNACCEPTABLE PATTERN

212_MM_05_0005+

Figure 5-3. Inspection of Spiral Bevel Gear (Sheet 2 of 3)

REGISTRATION NO._____

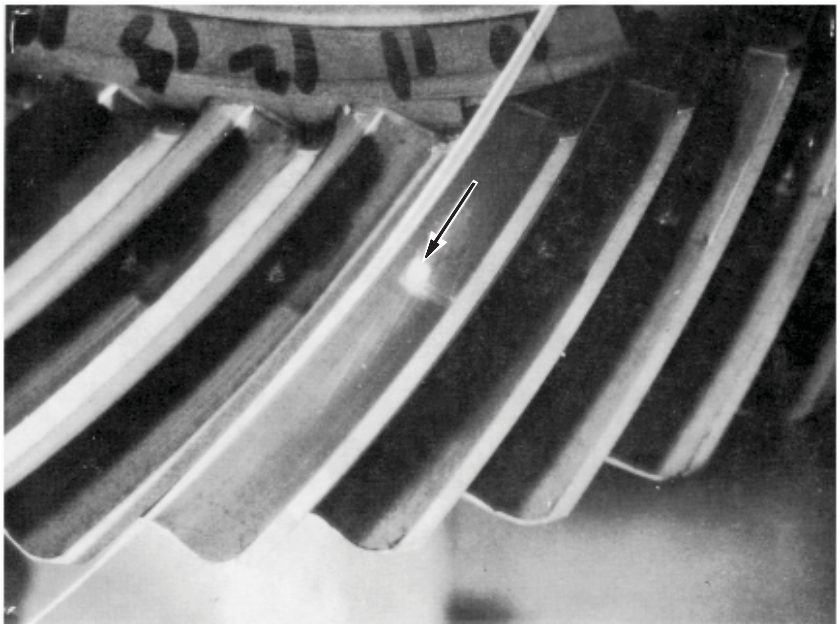

SPIRAL BEVEL GEAR (204-040-701) UNACCEPTABLE PATTERN

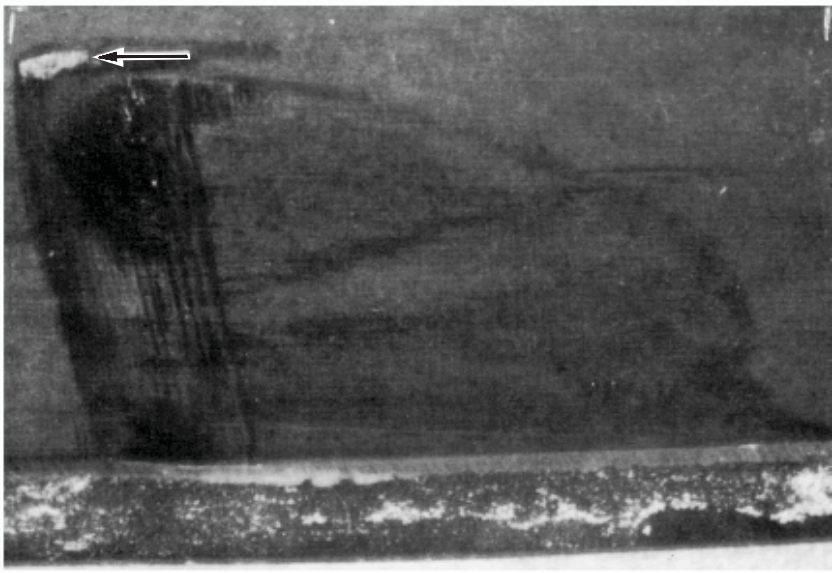

SPIRAL BEVEL GEAR (204-040-701) UNACCEPTABLE PATTERN

212_MM_05_0006+

Figure 5-3. Inspection of Spiral Bevel Gear (Sheet 3 of 3)

SPECIAL INSPECTIONS

5-13. BETWEEN 5 AND 10 HOURS OF FLIGHT AFTER EACH INSTALLATION

DATA REFERENCE	INSPECTION TASK DESCRIPTION	INITIAL MECH	INITIAL OTHER
	DATE: _____ **W.O.** _____ **FACILITY:** _____ **HELICOPTER S/N:** _____ **REGISTRY NO.:** _____ **TOTAL TIME:** _____ **SIGNATURE:** _____		
	NOTE Accomplish between 5 and 10 hours of flight after each installation.		
Chapter 65	**MAIN ROTOR**		
	1. Torque check main rotor retaining nut 520 to 780 foot-pounds (705 to 1057 Nm).		
Chapter 65	**2.** Main rotor hub blade attachment bolts, torque check nuts 260 to 300 foot-pounds (353 to 407 Nm).		
	TAIL ROTOR		
	1. Torque check tail rotor retaining nut 900 inch-pounds (101.69 Nm).		
	2. Torque check tail rotor blade retaining nuts 500 to 550 inch-pounds (56 to 62 Nm).		
Chapter 66	**TAIL ROTOR GEARBOX**		
	Torque check tail rotor gearbox retaining nuts 200 to 235 inch-pounds (22.60 to 26.55 Nm). Using a 0.005 inch (0.127 mm) or less feeler gauge, verify no gap exists between gearbox input quill shim and gearbox case shim.		

SPECIAL INSPECTIONS

5-13. BETWEEN 5 AND 10 HOURS OF FLIGHT AFTER EACH INSTALLATION (CONT)

DATA REFERENCE	INSPECTION TASK DESCRIPTION	INITIAL MECH	INITIAL OTHER
Chapter 66	**INTERMEDIATE GEARBOX** Torque check intermediate gearbox retaining bolts 50 to 70 inch-pounds (5.7 to 7.9 Nm).		

SPECIAL INSPECTIONS

5-14. EACH 8 HOURS OF COMPONENT OPERATION

DATA REFERENCE	INSPECTION TASK DESCRIPTION	INITIAL MECH	INITIAL OTHER
	DATE: _____ W.O. _____ **FACILITY: _____** **HELICOPTER S/N: _____** **REGISTRY NO.: _____** **TOTAL TIME: _____** **SIGNATURE: _____** Accomplish inspection of fin spar caps 212-030-447-001 and 212-030-447-101 every 8 flight hours. **NOTE** Fin spar cap 212-030-447-117 can be identified by the presence of decals that identify the cold-worked holes. This special inspection is not required if fin spar cap 212-030-447-117 has been installed as original equipment or in accordance with TB 205-00-111. **<u>FIN SPAR CAP 212-030-447-001/101</u>**		
ASB 205-98-70	**1.** Carry out 8 hour recurring inspection in accordance with applicable section of ASB 205-98-70. **2.** Any discrepancies (cracks, corrosion, debonding, or other damage) are to be reported to Product Support Engineering before further flight.		

SPECIAL INSPECTIONS

5-15. EACH 25 HOURS OF COMPONENT OPERATION

DATA REFERENCE	INSPECTION TASK DESCRIPTION	INITIAL MECH	INITIAL OTHER
	DATE: _____ W.O. _____ **FACILITY: _____** **HELICOPTER S/N: _____** **REGISTRY NO.: _____** **TOTAL TIME: _____** **SIGNATURE: _____** **<u>SWASHPLATE GIMBAL RING BOLTS</u>** **NOTE** Do not attempt to turn bolts. Bolt movement will fail loctite bond and cause bolt wear. **1.** Grasp swashplate rotating ring 204-011-403 and attempt to move it in a horizontal plane on an axis in line with gimbal ring attach points to support assembly 204-011-404. Maximum allowable axial looseness across the gimbal ring bearings and attaching bolts is 0.005 inch. **2.** Repeat step 1 on an axis 90° to check in step 1, attempting to detect looseness in line with gimbal ring attach points to inner ring 204-011-402. Maximum allowable axial looseness across the gimbal ring bearings and attaching bolts is 0.005 inch.		
Chapter 65	**<u>TRUNNION 204-011-451 INSTALLED IN SWASHPLATE ROTATING RING 204-011-403</u>** — Detailed Visual Inspection **1.** Check trunnions for excessive axial looseness.		

SPECIAL INSPECTIONS

5-15. EACH 25 HOURS OF COMPONENT OPERATION (CONT)

DATA REFERENCE	INSPECTION TASK DESCRIPTION	INITIAL MECH	INITIAL OTHER
	MAIN ROTOR HUB GRIP 204-011-121 — Detailed Visual Inspection **1.** Prepare both main rotor grip tangs for inspection by cleaning exposed surfaces with. denatured alcohol (C-326) and wipe dry. **2.** Inspect grip surfaces for hairline cracks on upper and lower surfaces. Pay particular attention to the lower tang lower surface from the blade bolt bushing flange to the trailing and leading edge of the tang (Figure 5-1). **3.** For main rotor grips 204-011-121-005, inspect grip barrels on both leading edge and trailing sides for hairline cracks (Figure 5-1). **TRANSMISSION MAIN CASE 204-040-353** **1.** Inspect main case web above the input quill at the 12 o'clock position that as been previously reworked per the BHT-205A1-CR&O-1 by doing the following: **a.** Visually inspect for signs of oil leakage in case wall. If noted, remove assembly and do an NDI on the case assembly. **b.** If no leakage is noted, thoroughly clean the area with alcohol/naphtha and visually inspect with minimum 3X magnifying glass for signs of cracks. **c.** Any crack is cause for immediate replacement of main case.		
Chapter 65	**TAIL ROTOR HUB ASSEMBLY** — Detailed Visual Inspection **1.** Flapping bearing 212-010-723-001 or 212-010-768-001, exposed outer races for cracks using a 3X magnifying glass. Any crack is cause for immediate replacement of both bearings. **2.** Inspect tail rotor yoke 212-010-704, 212-010-744, or 212-011-702.		

SPECIAL INSPECTIONS

5-15. EACH 25 HOURS OF COMPONENT OPERATION (CONT)

DATA REFERENCE	INSPECTION TASK DESCRIPTION	INITIAL MECH	INITIAL OTHER
	TAIL ROTOR STATIC STOP		
ASB 205-96-68 ASB 205-96-69	**1.** Inspect trunnion assembly 212-010-738 or 212-011-713 flapping stop for yielding as noted in Chapter 65 to determine if tail rotor yoke assembly may have been exposed to bending. If any doubt exists as to the serviceability of these components, contact Product Support Engineering.		
ASB 205-13-109 Chapter 65	**TAIL ROTOR BLADE** **NOTE** Removal of the tail rotor blades is not required for this inspection. **1.** Clean each tail rotor blade by hand using mild soap and cheesecloth (C-486) in a spanwise direction; dry thoroughly. **2.** Carry out a detailed visual inspection of both sides of the entire blade with a 3X magnifying glass and a bright light. Inspect the tail rotor blade skin, leading edge spar, doublers, grip plates, and trailing edge for cracks, corrosion, nicks, dents, and scratches. Refer to Chapter 65 for damage limits. **3.** Carry out a further detailed visual inspection, with a 10X magnifying glass and a bright light, of the shaded area shown in Figure 5-4 between stations 20.00 and 35.00 of both sides of the blade. **4.** If any blistering, peeling, flaking, bubbling, or cracked paint is detected, remove the paint from the affected area by sanding in a spanwise direction only, with an abrasive cloth or paper (C-406) 240 grit or finer, and a final sanding with an abrasive cloth or paper (C-406) 400 grit or finer. After paint removal, visually inspect the affected area for damage with a 10X magnifying glass. Damage beyond the limits in Chapter 65 requires the blade be removed from service.		

SPECIAL INSPECTIONS

5-15. EACH 25 HOURS OF COMPONENT OPERATION (CONT)

DATA REFERENCE	INSPECTION TASK DESCRIPTION	INITIAL MECH	INITIAL OTHER
	5. Only superficial corrosion that can be removed with aluminum wool or very fine grade abrasive pad (C-407) is permissible. Corrosion on the spar 0.003 inch deep or less is acceptable when polished out. Replace any blade that has corrosion on the spar greater than 0.003 inch. **6.** If a nick, scratch, or dent is found, visually inspect for crack using a 10X magnifying glass, or higher, and measure the depth of the damage. (A digital optical micrometer is one tool that can be used for this measurement.) **7.** Repair damage and/or corrosion found on tail rotor blades in accordance with Chapter 65. **8.** Replace any blade that has a crack. No cracks are permitted. **9.** If paint was removed during the previous steps, carry out paint touch-up/refinishing. **SYNCHRONIZED ELEVATOR 205-030-856-035 AND -037** **NOTE** Elevators 205-030-856-091/-093 do not require this inspection. **1.** Remove plug button from top of synchronized elevator. Place 25-pound weight on outboard tip of elevator and visually inspect top surface of spar, through inspection hole, for evidence of cracks. **2.** Inspect elevator if cracks are found. **3.** If no cracks are evident, remove weight and install plug button.		

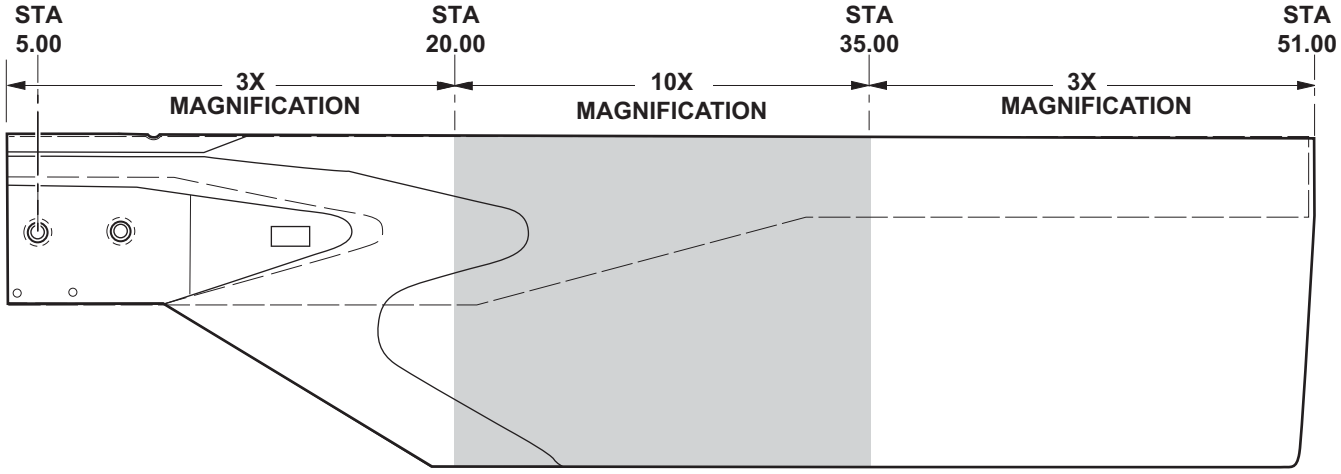

412_MM_05_0003+

Figure 5-4. Tail Rotor Blade — Special Inspection

SPECIAL INSPECTIONS

5-16. EACH 25 HOURS FOR THE NEXT FOUR INSPECTIONS

DATA REFERENCE	INSPECTION TASK DESCRIPTION	INITIAL MECH	INITIAL OTHER
	DATE: _____W.O. _____ **FACILITY: _____** **HELICOPTER S/N: _____** **REGISTRY NO.: _____** **TOTAL TIME:_____** **SIGNATURE:_____** **TAIL ROTOR HANGER BEARINGS WITNESS MARKS** **NOTE** Accomplish visual inspection of witness (only applicable to hanger bearings 204-040-623-003 and -005) marks each 25 flight hours for the next four inspections after installation or initial inspection of hanger bearings. **NOTE** All newly installed hanger bearings must contain a scribe or paint witness mark and will require an initial inspection.		
ASB 205-95-63	**1.** Perform helicopter run-up for 5 minutes. Shut down helicopter and inspect tail rotor hanger bearings for movement of the dust shields, identified by breakage of the witness marks. Remove any bearings from service that display dust shield movement. **2.** Hanger bearings not displaying movement at the run-up may remain in service, but must be inspected for dust shield movement at each of the next four mandatory 25 hour inspections, or any time the bearing is inspected between any of the 25 hour inspections. Bearings that do not display grease shield movement after the fourth 25 hour inspection may remain in service with no further inspection required. Record accomplishment of inspection in the helicopter log book.		

SPECIAL INSPECTIONS

5-16. EACH 25 HOURS FOR THE NEXT FOUR INSPECTIONS (CONT)

DATA REFERENCE	INSPECTION TASK DESCRIPTION	INITIAL MECH	INITIAL OTHER
	3. Remove any hanger bearing from service where the witness marks indicate that the grease shield has moved.		

SPECIAL INSPECTIONS

5-17. EACH 25 HOURS OF COMPONENT OPERATION OR 15 DAYS, OR EACH 5 DAYS FOR BLADES OPERATING IN SALT LADEN ATMOSPHERE, WHICHEVER OCCURS FIRST

DATA REFERENCE	INSPECTION TASK DESCRIPTION	INITIAL MECH	INITIAL OTHER
	DATE: _____ **W.O.** _____		
	FACILITY: _____		
	HELICOPTER S/N: _____		
	REGISTRY NO.: _____		
	TOTAL TIME: _____		
	SIGNATURE: _____		
	MAIN ROTOR BLADES		
Chapter 65	**1.** Refer to preventive maintenance for main rotor blades.		

SPECIAL INSPECTIONS

5-18. 100 HOURS AFTER EACH INSTALLATION

DATA REFERENCE	INSPECTION TASK DESCRIPTION	INITIAL MECH	INITIAL OTHER
	DATE: _____ **W.O.** _____ **FACILITY:** _____ **HELICOPTER S/N:** _____ **REGISTRY NO.:** _____ **TOTAL TIME:** _____ **SIGNATURE:** _____		
Chapter 53	**1.** Torque check tailboom attachment bolts.		

SPECIAL INSPECTIONS

5-19. MAIN ROTOR GRIP ULTRASONIC INSPECTION

DATA REFERENCE	INSPECTION TASK DESCRIPTION	INITIAL MECH	INITIAL OTHER
	DATE: _____ **W.O.** _____ **FACILITY:** _____ **HELICOPTER S/N:** _____ **REGISTRY NO.:** _____ **TOTAL TIME:** _____ **SIGNATURE:** _____		
	NOTE Main rotor grips P/N 204-011-121-117 with 4000 hours or more Time In Service (TIS) are to be ultrasonically inspected every 150 hours or 600 start/stop cycles, which ever occurs first. Main rotor grips P/N 204-011-121-117 with less than 4000 hours TIS do not require inspection until reaching 4000 hours. This inspection is not applicable to main rotor grips P/N 204-011-121-125. A start/stop cycle is defined as any time one or both of the helicopter engines are started followed by a shutdown.		
ASB 205-02-88	**MAIN ROTOR GRIPS P/N 204-011-121-117**		
Chapter 65	**1.** Carry out ultrasonic inspection. **2.** Any indication of a crack detected in accordance with the instructions will require the grip to be removed from service and a serviceable grip installed. If the grip was inspected by a level I special, the unserviceable grip is to be sent to a facility that has level II or III ultrasonic capability for further investigation. All grips that have a crack indication and have been inspected by a level II or III are to be sent to Bell Helicopter Textron. Refer to Information Letter IL GEN-04-98 for shipping instructions.		

SPECIAL INSPECTIONS

5-20. EACH 300 HOURS OF COMPONENT OPERATION

DATA REFERENCE	INSPECTION TASK DESCRIPTION	INITIAL MECH	INITIAL OTHER
	DATE: _____W.O. _____		
	FACILITY: _____		
	HELICOPTER S/N: _____		
	REGISTRY NO.: _____		
	TOTAL TIME:_____		
	SIGNATURE:_____		
	STARTER-GENERATOR		
Chapter 96	**1.** Check starter-generator for allowable brush wear.		

SPECIAL INSPECTIONS

5-21. EACH 300 HOURS OR 3 MONTHS OF COMPONENT OPERATION, WHICHEVER OCCURS FIRST

DATA REFERENCE	INSPECTION TASK DESCRIPTION	INITIAL MECH	INITIAL OTHER
	DATE: _____ **W.O.** _____ **FACILITY:** _____ **HELICOPTER S/N:** _____ **REGISTRY NO.:** _____ **TOTAL TIME:** _____ **SIGNATURE:** _____		
	MAIN DRIVESHAFT 205-040-004-017		
Chapter 66 BHT-205A1-CR&O-1	**1.** Remove, inspect, and lubricate main driveshaft.		
Chapter 66	**2.** Remove, inspect, lubricate, and install engine driveshaft adapter.		
	3. Wipe all grease from exterior surfaces of couplings and from clamp sets.		
	4. Install main driveshaft.		
	5. Wipe all grease from surrounding structure.		
BHT-205A1-FM	**6.** Start engine and operate for 5 minutes at 100% N2.		
	7. Carefully inspect coupling and surrounding structure for evidence of grease being slung out of coupling. If there is evidence of grease slinging, remove coupling and replace defective parts. Repeat leak test run.		

SPECIAL INSPECTIONS

5-22. EACH 500 HOURS OF COMPONENT OPERATION

DATA REFERENCE	INSPECTION TASK DESCRIPTION	INITIAL MECH	INITIAL OTHER
	DATE: _____W.O. _____		
	FACILITY: _____		
	HELICOPTER S/N: _____		
	REGISTRY NO.: _____		
	TOTAL TIME:_____		
	SIGNATURE:_____		
	FIRE DETECTOR SYSTEM		
BHT-205A1-MM-2	**1.** Test fire detector system with Pyrotector 30-502 tester or equivalent.		
	HYDRAULIC SHUTOFF VALVE		
Chapter 29	**1.** Perform functional check of shutoff valve 204-076-191, single hydraulic systems only.		
	BATTERY TEMPERATURE SENSOR		
BHT-205A1-MM-2	**1.** Perform operational check of battery temperature sensor CAUTION light system.		

SPECIAL INSPECTIONS

5-23. EACH 600 HOURS/12 MONTHS OF TAIL ROTOR DRIVESHAFT COUPLING OPERATION

DATA REFERENCE	INSPECTION TASK DESCRIPTION	INITIAL MECH	INITIAL OTHER
	DATE: _____ **W.O.** _____ **FACILITY:** _____ **HELICOPTER S/N:** _____ **REGISTRY NO.:** _____ **TOTAL TIME:** _____ **SIGNATURE:** _____ **NOTE** Accomplish each 600 hours of component operation or 12 months, whichever occurs first (no Non-Destructive Inspection (NDI) required). **TAIL ROTOR DRIVESHAFT FLEXIBLE COUPLINGS** **1.** Remove tail rotor driveshaft assemblies. **NOTE** Disassemble flexible couplings only to the extent necessary to remove old grease and repack. **2.** Clean, visually inspect, and repack tail rotor hanger assembly flexible couplings. **3.** Clean, visually inspect, and repack intermediate gearbox flexible couplings. **4.** Clean, visually inspect, and repack tail rotor gearbox flexible coupling **5.** Clean, visually inspect, and repack transmission tail rotor driveshaft flexible coupling. **6.** Install tail rotor driveshaft assemblies.		

SPECIAL INSPECTIONS

5-24. EACH 600 HOURS OR 12 MONTHS OF COMPONENT OPERATION, WHICHEVER OCCURS FIRST

DATA REFERENCE	INSPECTION TASK DESCRIPTION	INITIAL MECH	INITIAL OTHER
	DATE: _____W.O. _____		
	FACILITY: _____		
	HELICOPTER S/N: _____		
	REGISTRY NO.: _____		
	TOTAL TIME:_____		
	SIGNATURE:_____		
	MAIN DRIVESHAFT 205-040-004-003, 011, AND -103		
Chapter 66 BHT-205A1-CR&O-1	**1.** Remove, inspect, and lubricate main driveshaft.		
Chapter 66	**2.** Remove, inspect, lubricate, and install engine driveshaft adapter.		
	3. Wipe all grease from exterior surfaces of couplings and from clamp sets.		
	4. Install main driveshaft.		
BHT-205A1-FM	**5.** Start engine and operate for 5 minutes at 100% N2.		
	6. Carefully inspect coupling and surrounding structure for evidence of grease being slung out of coupling. If there is evidence of grease slinging, remove coupling and replace defective parts. Repeat leak test run.		
	MAIN DRIVESHAFT 204-040-433-101		
Chapter 66	**1.** Remove driveshaft and inspect internal fail-safe diameters for evidence of contact. If contact is noticed, driveshaft must be replaced.		
	2. Remove, inspect, lubricate, and install engine driveshaft adapter.		

SPECIAL INSPECTIONS

5-24. EACH 600 HOURS OR 12 MONTHS OF COMPONENT OPERATION, WHICHEVER OCCURS FIRST (CONT)

DATA REFERENCE	INSPECTION TASK DESCRIPTION	INITIAL MECH	INITIAL OTHER
	3. Visually inspect driveshaft for obvious mechanical damage, flexplate looseness, corrosion, and/or fretting at flexplate bolted joints. **4.** Reinstall driveshaft.		

SPECIAL INSPECTIONS

5-25. EACH 6 MONTHS

DATA REFERENCE	INSPECTION TASK DESCRIPTION	INITIAL MECH	INITIAL OTHER
	DATE: _____ **W.O.** _____ **FACILITY:** _____ **HELICOPTER S/N:** _____ **REGISTRY NO.:** _____ **TOTAL TIME:** _____ **SIGNATURE:** _____		
Chapter 52	**1.** Perform operational check of crew doors emergency ejection system.		
Chapter 52	**2.** Perform operational check of passenger/cargo door escape panels.		

SPECIAL INSPECTIONS

5-26. EACH 12 MONTHS

DATA REFERENCE	INSPECTION TASK DESCRIPTION	INITIAL MECH	INITIAL OTHER
	DATE: _____ **W.O.** _____ **FACILITY:** _____ **HELICOPTER S/N:** _____ **REGISTRY NO.:** _____ **TOTAL TIME:** _____ **SIGNATURE:** _____ **GENERAL** Inspect all fuel system, oil system, and hydraulic system filler caps for proper functioning and sealing. Make sure the sealing O-rings within the filler caps are in good condition. Repair or replace the filler caps or replace sealing O-rings as required.		

SPECIAL INSPECTIONS

5-27. EACH 1000 HOURS OR 12 MONTHS OF COMPONENT OPERATION

DATA REFERENCE	INSPECTION TASK DESCRIPTION	INITIAL MECH	INITIAL OTHER
	DATE: _____ **W.O.** _____ **FACILITY:** _____ **HELICOPTER S/N:** _____ **REGISTRY NO.:** _____ **TOTAL TIME:** _____ **SIGNATURE:** _____		
Chapter 65 BHT-205A1-CR&O-1	**1.** Inspect main rotor blades 204-011-250-ALL.		

SPECIAL INSPECTIONS

5-28. FIRST 1000 HOURS OF COMPONENT TIME AND EACH 3000 HOURS THEREAFTER OF COMPONENT TIME

DATA REFERENCE	INSPECTION TASK DESCRIPTION	INITIAL MECH	INITIAL OTHER
	DATE: _____ **W.O.** _____ **FACILITY:** _____ **HELICOPTER S/N:** _____ **REGISTRY NO.:** _____ **TOTAL TIME:** _____ **SIGNATURE:** _____		
ASB 205-76-8	**NOTE** Accomplish first 1000 hours of inspection of component time and each 3000 hours thereafter of component time. Applicable to flight control tube assemblies: 204-001-957-001, 205-001-017-001/-007, 212-001-051-001, 212-001-060-001, and 212-076-151-001/-003/-005/-007/-009/-011. Supersedes ASB 205-76-8. Flight Control Tube Assemblies are identified by the following sub-assemblies: 204-001-957-001 contains tube assembly 204-001-957-003 205-001-053-007 contains tube assembly 205-001-053-009 205-001-021-007 contains tube assembly 205-001-021-009 205-001-041-001 contains tube assembly 205-001-041-003 205-001-040-001 contains tube assembly 205-001-040-003 205-076-176-001 contains tube assembly 205-076-172-005 205-076-176-001 replaced by 212-076-151-001 205-076-176-001 contains tube assembly 205-076-172-001 212-076-151-001 contains tube assembly 212-076-150-001 212-076-151-007 contains tube assembly 212-001-275-001 212-076-151-007 contains tube assembly 212-001-280-101 △1 205-076-164-005 contains tube assembly 205-076-164-009 △1 As control tube assembly 212-001-280-101 is fabricated from Corrosion Resistant Steel (CRES), special inspection not applicable.		

SPECIAL INSPECTIONS

5-28. FIRST 1000 HOURS OF COMPONENT TIME AND EACH 3000 HOURS THEREAFTER OF COMPONENT TIME (CONT)

DATA REFERENCE	INSPECTION TASK DESCRIPTION	INITIAL MECH	INITIAL OTHER
BHT-205A1-CR&O	**1.** Inspect flight control tube assemblies 205-076-176-001, 205-076-164-005, and 212-076-151-001/-007 as follows: **a.** Measure and record overall length of control tube, and then remove adjustable clevis. **b.** Inspect control tube for internal corrosion using a borescope or equivalent (Paint removal is not necessary). Particular attention shall be given to threaded areas. Any paint anomalies such as blistering or discoloration will require paint removal and further inspection. Any visible internal corrosion is cause for control tube rejection. If serviceable, refinish internal surface of control tube with two coats of lacquer (C-226) using fill and drain method. **c.** Visually inspect external surfaces of control tubes for mechanical damage and/or corrosion. Refer to the BHT-205A1-CR&O Manual for limits. **d.** If serviceable, coat the control tube threaded area with corrosion preventive compound (C-101), reinstall clevis into control tube and adjust to recorded length. **2.** Inspect control tubes 204-001-957-001, 205-001-053-007, 205-001-021-007, 205-001-041-001, and 205-001-040-001 as follows: **a.** Using a suitable container filled with 135 to 155°F (57 to 68°C) water, fully immerse the control tube for 2 minutes. **b.** Any air bubbles detected from the control tube as a result of the water immersion is cause for rejection of the tube. **c.** Provided no air bubbles are detected, the control tube may be considered serviceable. **3.** Install flight control tubes and check rigging.		

SPECIAL INSPECTIONS

5-29. EACH 1200 HOURS OF COMPONENT OPERATION — DELETED

DATA REFERENCE	INSPECTION TASK DESCRIPTION	INITIAL MECH	INITIAL OTHER
	NOTE The Each 1200 Hours of Component Operation special inspection has been moved to the 1200 Hours or 24 Months, Whichever Occurs First, special inspection (paragraph 5-30).		

SPECIAL INSPECTIONS

5-30. EACH 1200 HOURS OR 24 MONTHS, WHICHEVER COMES FIRST

DATA REFERENCE	INSPECTION TASK DESCRIPTION	INITIAL MECH	INITIAL OTHER
	DATE: _____ **W.O.** _____ **FACILITY:** _____ **HELICOPTER S/N:** _____ **REGISTRY NO.:** _____ **TOTAL TIME:** _____ **SIGNATURE:** _____		
	NOTE Accomplish each 1200 hours/24 months (whichever occurs first) of listed component operation.		
ASB 205-02-86 ASB 205-11-107	**MAIN ROTOR HUB PINS 204-012-104-003/-005 AND INBOARD STRAP FITTINGS 204-012-102-005/-009**		
BHT-205A1-CR&O	**1.** Remove the four pins and two inboard strap fittings from the main rotor hub assembly. **2.** Inspect pins and inboard strap fittings by magnetic particle method. **3.** Magnetic particle indication interpreted as cracks are not acceptable and the pin or inboard strap fitting must be scrapped. **4.** If any strap pins are found cracked, the mating strap fitting must also be scrapped. **5.** If the pins are replaced (e.g., time expired), the mating fittings will be considered serviceable only after NDI inspection of the removed pins has confirmed they are not cracked. **6.** Reassemble main rotor hub assembly. **7.** Make an entry in the helicopter Historical Records (HR) to show that the main rotor hub pins and inboard strap fittings have been inspected in accordance with this special inspection.		

SPECIAL INSPECTIONS

5-30. EACH 1200 HOURS OR 24 MONTHS, WHICHEVER COMES FIRST (CONT)

DATA REFERENCE	INSPECTION TASK DESCRIPTION	INITIAL MECH	INITIAL OTHER
	MAIN ROTOR YOKE 212-011-102		
	— Detailed Visual Inspection		
BHT-205A1-CR&O-1	**1.** Remove bearing races and spacers.		
	2. Inspect yoke spindle for cracks and corrosion pits.		
	3. Inspect yoke spindle bearing journals for wear.		
	4. Any crack or wear beyond limits is cause for rejection of the yoke. Clean up any corrosion.		
BHT-205A1-CR&O-1	**5.** Assemble yoke.		
	MAIN ROTOR HUB GRIP 204-011-121		
	— Detailed Visual Inspection		
	1. Prepare both main rotor grip tangs for inspection by cleaning exposed surfaces with denatured alcohol (C-326) and wipe dry.		
	2. Inspect grip surfaces for hairline cracks on upper and lower surfaces. Pay particular attention to the lower tangs lower surface from the blade bolt bushing flange to the trailing and leading edge of the tang. Crack indications require the grip to be removed from service for further evaluation (Figure 5-5).		
	3. For main rotor grip 204-011-121-005, inspect grip barrels on both leading and trailing sides for hairline cracks.		
	4. Check for gap (360°) between flange of blade bolt bushing and surface of grip tang. Maximum gap of 0.0025 inches (0.0635 mm) permitted. Noted gaps greater than the maximum permitted requires bushing to be replaced.		
BHT-205A1-CR&O-1	**5.** Fit a blade bolt through both bushings simultaneously; bolt should be able to be turned with fingers. If this cannot be accomplished refer to BHT-205A1-CR&O-1 for further inspection requirements.		

SPECIAL INSPECTIONS

5-30. EACH 1200 HOURS OR 24 MONTHS, WHICHEVER COMES FIRST (CONT)

DATA REFERENCE	INSPECTION TASK DESCRIPTION	INITIAL MECH	INITIAL OTHER
	6. Inspect buffer pads on tang inner surfaces for delamination. Any delamination will require buffer pad replacement (Figure 5-5).		

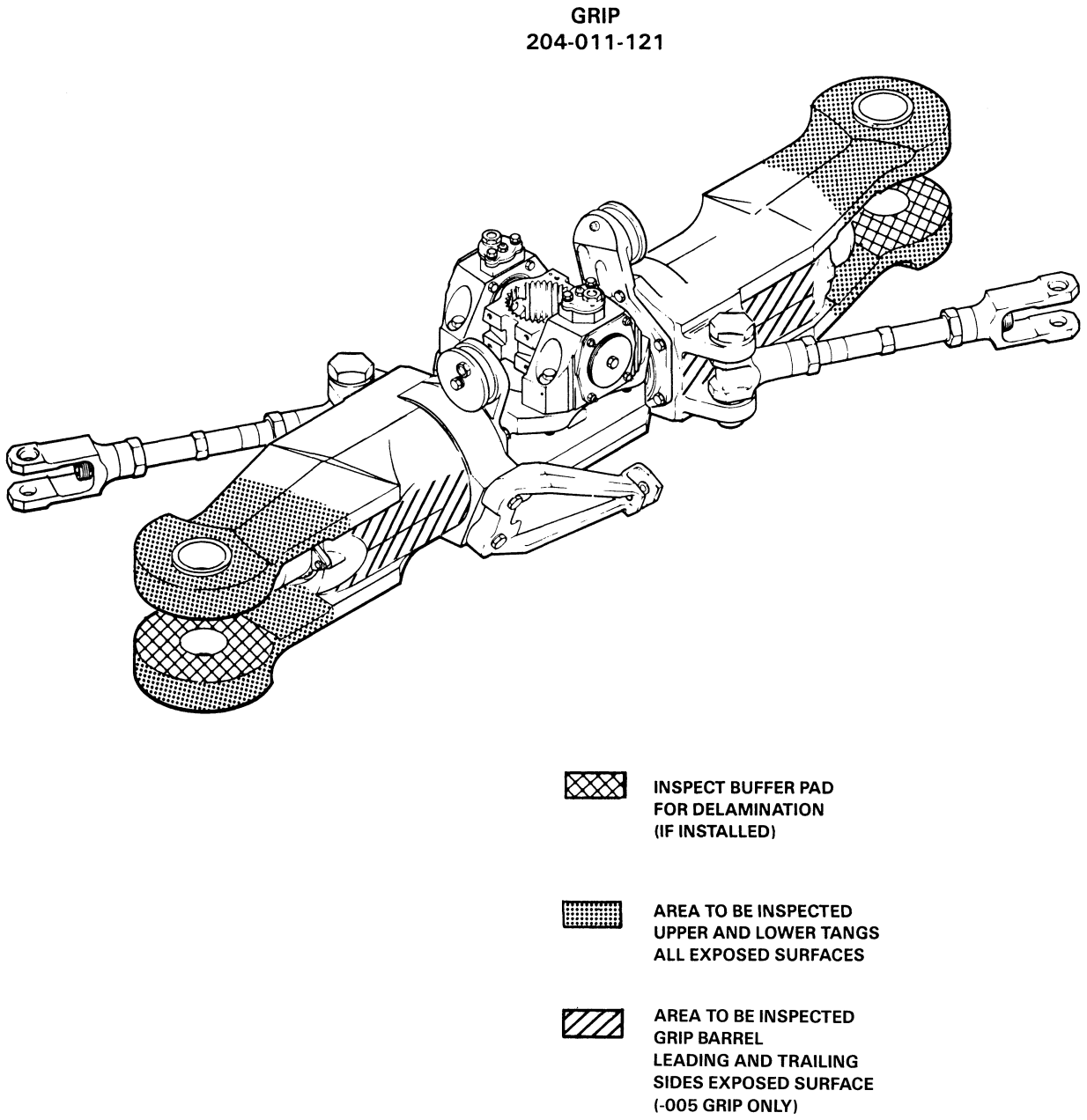

Figure 5-5. Inspection of Main Rotor Hub Grip Tangs and Barrel (1200 Hours/24 Months)

SPECIAL INSPECTIONS

5-31. EACH 24 MONTHS OF FLIGHT CONTROL SYSTEM BOLT OPERATION

DATA REFERENCE	INSPECTION TASK DESCRIPTION	INITIAL MECH	INITIAL OTHER
	DATE: _____ **W.O.** _____ **FACILITY:** _____ **HELICOPTER S/N:** _____ **REGISTRY NO.:** _____ **TOTAL TIME:** _____ **SIGNATURE:** _____		
Chapter 27 and Chapter 65 ASB 205-89-34	**NOTE** Accomplish each 24 months of flight control system bolt operation. **FLIGHT CONTROL SYSTEM BOLTS** **NOTE** Refer to Chapter 4 for retirement life of flight control system bolts. — Inspect **1.** Remove the following flight control bolts: **a.** Two fixed swashplate to right and left cyclic boost tube bolts 20-057-5-21D or 20-057-5-24D. **b.** One collective lever to collective boost tube bolt 20-057-5-24D. **c.** Boost tube universal bolts 20-057-5-23D or 20-057-24D (2 each). **d.** Universal to hydraulic cylinder tube bolts 20-057-5-23D or 20-057-5-24D (2 each).		

SPECIAL INSPECTIONS

5-31. EACH 24 MONTHS OF FLIGHT CONTROL SYSTEM BOLT OPERATION (CONT)

DATA REFERENCE	INSPECTION TASK DESCRIPTION	INITIAL MECH	INITIAL OTHER
	e. Two mixing lever to scissors tubes bolts 20-057-5-27D. **f.** Two scissors tube to scissors bolts 20-057-5-27D. **g.** Two pitch link to universal tube bolts 20-057-6-27D. **h.** Two drive link to rotating swashplate bolts 20-057-5-30D. **i.** Two pitch horn to pitch link bolts 20-057-6-31D. **j.** Two universal to mixing lever bolts 20-057-6-34D. **k.** Four mixing lever 204-011-301, pivot bolts 20-057-6S20D. **l.** Four mixing lever 212-010-302, pivot bolts 20-057-6S20D, 20-057-6S23D, or 20-057-6S24D. **m.** Two scissors to drive link bolts 20-057-8S69D. **n.** Two scissors 204-011-406, pivot bolts 20-057-8S90D. **o.** Two stabilizer bar pivot bolts 20-057-10S27D or 20-057-10S29D. **p.** Three hydraulic cylinder to lower support bolts 205-001-311-001, 212-001-304-001, 212-001-304-003, or 212-001-323-001. **q.** Two scissors 212-010-407, pivot bolts 212-010-411-001 or 212-010-411-005. **r.** Two stabilizer bar damper tube to damper wing shaft bolts AN174-15. **s.** Two stabilizer bar damper tube to stabilizer bar bolts AN174-20. **t.** Two collective lever to swashplate support bolts AN178-22A. **u.** Deleted.		

SPECIAL INSPECTIONS

5-31. EACH 24 MONTHS OF FLIGHT CONTROL SYSTEM BOLT OPERATION (CONT)

DATA REFERENCE	INSPECTION TASK DESCRIPTION	INITIAL MECH	INITIAL OTHER
	v. Deleted.		
	2. Clean bolts with cloth dampened with MEK (C-309).		
	3. Inspect bolts for thread damage, shank wear, and corrosion. Replace any bolt that has damaged threads, detectable shank wear, or exhibits corrosion pitting.		
Chapter 27 and Chapter 65	**4.** Apply corrosion preventive compound (C-104) to shanks of bolts only and install bolts. **NOTE** Operations in extreme environmental conditions (which erodes the hard film corrosion preventive compound) may warrant periodic touch-up of control bolts external surfaces. Prior to touch-up, visually check exposed surfaces of hardware for evidence of corrosion and fretting. Remove, clean, and inspect bolts as conditions warrant.		
	5. After bolts have been installed and nuts torqued and safetied, coat head of bolt, nuts, and lockwire with corrosion preventive compound (C-101).		

SPECIAL INSPECTIONS

5-32. EACH 3000 HOURS OF COMPONENT OPERATION

DATA REFERENCE	INSPECTION TASK DESCRIPTION	INITIAL MECH	INITIAL OTHER
	DATE: _____ W.O. _____		
	FACILITY: _____		
	HELICOPTER S/N: _____		
	REGISTRY NO.: _____		
	TOTAL TIME: _____		
	SIGNATURE: _____		
	MAIN ROTOR MAST		
BHT-205A1-CR&O-1	**1.** Inspect inside and outside diameters of mast for corrosion and mechanical damage.		
	FLIGHT CONTROLS		
ASB 205-76-8	**2.** Inspect flight control tubes and bellcranks in accordance with ASB 205-76-8 (paragraph 5-28).		

SPECIAL INSPECTIONS

5-33. EACH 3100 HOURS OF COMPONENT OPERATION

DATA REFERENCE	INSPECTION TASK DESCRIPTION	INITIAL MECH	INITIAL OTHER
	DATE: _____W.O. _____		
	FACILITY: _____		
	HELICOPTER S/N: _____		
	REGISTRY NO.: _____		
	TOTAL TIME:_____		
	SIGNATURE:_____		
	TRANSMISSION 212-040-001-135		
Chapter 66	**1.** Remove main input driven gear quill.		
Chapter 66	**2.** Remove gear support case and debris collector to gain access to spiral bevel gear retaining bolts.		
	a. Using torque wrench, check each of the 32 bevel gear retaining bolts for minimum torque of 300 inch-pounds (33.9 Nm).		
	NOTE Torque check is accomplished with increasing torque, not breakaway or loosening torque (BHT-ALL-SPM, Chapter 2).		
BHT-205A1-CR&O-1	**b.** If torque value of any one retaining bolt is less than 300 inch-pounds (33.89 Nm), remove bevel gear and inspect mating surfaces of gear and shaft for fretting damage. The maximum acceptable depth of pitting is 0.0005 inch (0.0127 mm). Pitting of measurable depth is acceptable only in the area on the gear or shaft surface outside of the diameter of the bolt holes, and is not acceptable within 0.100 inch (2.54 mm) of the edge of a bolt hole. Damage in excess of these limits is cause for rejection of part.		
BHT-205A1-CR&O-1	**3.** Inspect upper flange surface and pilot diameter of ring gear and mating surfaces of top case for fretting and wear.		

SPECIAL INSPECTIONS

5-33. EACH 3100 HOURS OF COMPONENT OPERATION (CONT)

DATA REFERENCE	INSPECTION TASK DESCRIPTION	INITIAL MECH	INITIAL OTHER
BHT-205A1-CR&O-1	**4.** Inspect lower flange surface and pilot diameter of ring gear, and mating surfaces of bevel gear support case for fretting and wear.		
	5. Visually check the vibro-etched index marks on input pinion and inner race of the bearing set for alignment. Inspection may be accomplished with input quill installed by viewing pinion shaft and bearing inner race between pinion teeth and main case.		
	a. If index marks indicate rotational movement between the pinion and inner race of the bearing set, remove quill and bearing set and inspect pinion bearing journal for signs of fretting and bearing inner race(s) pinning. Visually inspect oil holes in input quill sleeve to ensure that they are free of any foreign material. Inspect detail parts to determine cause for bearing inner race rotation and replace parts as required.		
	6. Disassemble input quill sufficiently to remove the freewheel clutch.		
BHT-205A1-CR&O-1, Chapter 66	**a.** Perform complete inspection of clutch 205-040-350-101/-103 (FORMSPRAG).		
BHT-205A-1-CR&O-1	**7.** Visually inspect bevel gear teeth and main input pinion teeth for general condition and wear pattern.		
BHT-205A1-CR&O-1, Chapter 66	**8.** Inspect planetary ring gear, sun gears, and planetary pinions for general condition and wear pattern. Inspect all parts of upper and lower planetary visually for wear and damage. Parts that show evidence of wear or physical damage must be checked dimensionally.		
	9. Magnetic particle inspect the lower planetary spider gear.		
BHT-205A1-CR&O-1, Chapter 66	**a.** Disassemble lower planetary.		
	b. Perform a magnetic particle inspection on spider gear in accordance with BHT-ALL-SPM, Chapter 6.		

SPECIAL INSPECTIONS

5-33. EACH 3100 HOURS OF COMPONENT OPERATION (CONT)

DATA REFERENCE	INSPECTION TASK DESCRIPTION	INITIAL MECH	INITIAL OTHER
	CAUTION DURING ASSEMBLY OF SPIRAL BEVEL GEAR TO SHAFT, ENSURE MATING SURFACES ARE DRY. ANY FORM OF LUBRICANT ON SHAFT WILL RESULT IN TORQUE LOSS OF ATTACHMENT BOLTS AND SUBSEQUENT FRETTING DAMAGE.		
BHT-205A1-CR&O-1, Chapter 66	**10.** Remove tail rotor drive quill to gain access to accessory drive and sump gears. Visually inspect accessory case input quill gear and tail rotor drive quill gear for general condition and wear pattern.		
BHT-205A1-CR&O-1	**11.** Assemble transmission.		

CONDITIONAL INSPECTIONS

5-34. CONDITIONAL INSPECTIONS

1. Perform applicable conditional inspection of helicopter after hard landing, after blade strike or other rotating system torque spike, sudden stoppage/ acceleration — main rotor, sudden stoppage/ acceleration — tail rotor, overspeed, overtorque, compressor stall or surge, lightning strikes, and after magnetic compass malfunction.

2. If overhaul evaluation is specified, complete both the conditional inspection and normal inspection procedures (as applicable) for that component listed in BHT-205-CR&O-1 manual.

3. If applicable conditional inspection does not provide complete information on a specific type of incident or if any doubt exists as to the serviceability of the helicopter or related components, contact Product Support Engineering.

CONDITIONAL INSPECTIONS

5-35. HARD LANDING

DATA REFERENCE	INSPECTION TASK DESCRIPTION	INITIAL MECH	INITIAL OTHER
	DATE: _____ **W.O.** _____ **FACILITY:** _____ **HELICOPTER S/N:** _____ **REGISTRY NO.:** _____ **TOTAL TIME:** _____ **SIGNATURE:** _____ Hard landing is defined as any accident or incident in which ground impact of the helicopter causes severe pitching of main rotor, allowing hard contact of hub with mast, or results in yielding or cracking the mounting lugs of the transmission support case or noticeable yielding or cracking of fuselage pylon support structure or landing gear. This definition is confined only to those accidents not involving sudden stoppage of main rotor or tail rotor. **NOTE** Components removed from a helicopter, following a hard landing, shall be evaluated as an interrelated group. Annotate all Component History Cards that reason for removal was Hard Landing. **1.** If a hard landing is suspected, step a through step g shall be complied with. **a.** Inspect main and tail rotor blades for evidence of strike damage. If such evidence is found on either rotor, do the conditional inspection After Blade Strike or Other Rotating System Torque Spike. **b.** Visually inspect underside of fuselage and tailboom for evidence of ground contact.		
Chapter 32	**c.** Do the landing gear deflection check.		

CONDITIONAL INSPECTIONS

5-35. HARD LANDING (CONT)

DATA REFERENCE	INSPECTION TASK DESCRIPTION	INITIAL MECH	INITIAL OTHER
	(1) If crosstubes have yielded, remove landing gear and inspect support and structure to which they are attached for signs of yielding or other damage. **(2)** If supports and attaching structure are not damaged, replace damaged landing gear components. **d.** Inspect mast for deformation due to rotor hub contact. **e.** Inspect area around lower supports of pylon dampers for loose rivets or other damage. **f.** If no damage other than yielded landing gear crosstubes has been found at this point, it can reasonably be decided that a true hard landing did not occur. Complete a daily inspection and return helicopter to flight status provided no further evidence of damage is found. **g.** If damage is more extensive than landing gear crosstube yielding, a hard landing has occurred; comply with requirements of step 2 through step 4. **2.** If a hard landing has occurred, the following steps shall be accomplished: **a.** Remove and perform an overhaul evaluation inspection of the following components. **NOTE** If there is any deformation in area contacted by main rotor hub, or any other obvious damage, the mast is non-airworthy and non-repairable. **(1)** Mast assembly. **(2)** Transmission. **(3)** Main input driveshaft. **b.** Perform a thorough visual inspection of the following components, which may be kept in service if no discrepancy or obvious damage is found. Replace any damaged component.		

CONDITIONAL INSPECTIONS

5-35. HARD LANDING (CONT)

DATA REFERENCE	INSPECTION TASK DESCRIPTION	INITIAL MECH	INITIAL OTHER
	(1) Main rotor blades. **(2)** Main rotor hub. **(3)** Tail rotor blades. **(4)** Tail rotor hub. **NOTE** Inspect tail rotor flapping stop for yielding to determine if tail rotor yoke assembly may have been exposed to bending (Chapter 65). **(5)** Tail rotor static stop. **(6)** Tail rotor yoke. **(7)** Anti-torque controls. **(8)** Intermediate gearbox. **(9)** Tail rotor gearbox. **(10)** Tail rotor driveshafts. **(11)** Tail rotor driveshaft hangers. **(12)** Swashplate and support assembly. **(13)** Scissors and sleeve assembly. **(14)** Stabilizer bar assembly. **(15)** Main rotor controls. **c.** Check all cowling and doors for proper fit and alignment. Remove cowling and inspect all attachment fittings.		

CONDITIONAL INSPECTIONS

5-35. HARD LANDING (CONT)

DATA REFERENCE	INSPECTION TASK DESCRIPTION	INITIAL MECH	INITIAL OTHER
	NOTE If significant damage has been found in any area of the airframe, inspection shall be expanded in those areas until it extends beyond the zone of damage. **d.** Using a 10X magnifying glass, make a complete inspection of pylon support structure for loose or shredded rivets, cracked brackets, buckled or cracked support angles and webs. Pay particular attention to pylon mounts attaching points and damper support attaching points. **e.** Remove lift link and make a complete inspection of lift link, lift link attachment fittings and lift beam for cracks and other evidence of damage. If lift link is damaged, it is non-airworthy and non-repairable. **f.** Remove both pylon dampers, disassemble and check for internal yielding. Reassemble and reinstall if no evidence of damage. If pylon dampers have yielded they are non-airworthy and non-repairable. **g.** Install serviceable mast, transmission assembly, and main driveshaft assembly. Reinstall removed pylon control components. **h.** Check all engine mount fittings and bolts for damage and looseness. **i.** Inspect engine firewalls for evidence of warping, crushing, or other damage. **j.** Make a complete inspection of area where tailboom is attached to forward fuselage section. This includes both sets of attachment fittings and the longerons, beam caps, skins, webs, bulkhead flanges, and other structural members. Check torque on attachment bolts to determine if yielding has occurred. **k.** Completely inspect flight control system from pilots controls to rotor head for bent or damaged tubes, bellcranks, bellcrank supports, and for damaged control system bearings. Particular attention shall be given to pylon controls, lower cylinder attachment support fitting, and adjacent airframe structure.		

CONDITIONAL INSPECTIONS

5-35. HARD LANDING (CONT)

DATA REFERENCE	INSPECTION TASK DESCRIPTION	INITIAL MECH	INITIAL OTHER
	l. Pressurize hydraulic system and check for leaks, interference, binding, and for satisfactory operation. **m.** Inspect fuel, oil and pneumatic system for damage. Make engine ground run and visually check fuel, oil and pneumatic lines for leaks **3.** Inspect power plant in accordance with engine manufacturer's engine inspection guide. **4.** If no significant damage has been found, no further inspection is necessary.		

CONDITIONAL INSPECTIONS

5-36. AFTER BLADE STRIKE OR OTHER ROTATING SYSTEM TORQUE SPIKE

DATA REFERENCE	INSPECTION TASK DESCRIPTION	INITIAL MECH	INITIAL OTHER
	DATE: _____ **W.O.** _____ **FACILITY:** _____ **HELICOPTER S/N:** _____ **REGISTRY NO.:** _____ **TOTAL TIME:** _____ **SIGNATURE:** _____		
BHT-205A1-CR&O-1	**NOTE** To be accomplished after a main blade or tail rotor blade strike or any drive system failure which inhibits free rotation of drive system. If the blade strike or rotating system torque spike is the result of crash damage or results in crash damage, all rotating system components shall be considered unserviceable and non-repairable. Crash damage is any damage sustained beyond the scope of that identified in conditional inspections. A blade strike is any incident during which a rapid deceleration of the drive system occurs due to contact of the main or tail rotor blades with ground, water, snow, dense vegetation, or any other object sufficient to cause any of the following: Main rotor blades — Any impact damage to the leading edge or lower skin which exceeds the limits specified in Chapter 65. Any skin cracks. Main rotor mast — Twisting, out of roundness or bowing that exceeds the limits specified in BHT-205A1-CR&O-1.		

CONDITIONAL INSPECTIONS

5-36. AFTER BLADE STRIKE OR OTHER ROTATING SYSTEM TORQUE SPIKE (CONT)

DATA REFERENCE	INSPECTION TASK DESCRIPTION	INITIAL MECH	INITIAL OTHER
	Tail rotor blades — Any impact damage to the leading edge or lower skin that exceeds the limits specified in Chapter 65. Any skin buckling or skin tears that exceeds the limits specified in Chapter 65.		
ASB 205-96-69	Inspect tail rotor static stops for yielding as noted in Chapter 65 to determine if tail rotor yoke assembly may have been exposed to bending.		
	Tail rotor static stop 212-011-713 — Check for straightness across the outboard surface, if yielding has occurred, replace the tail rotor yoke and static stop.		
	Tail rotor driveshafts — Twisting, out of roundness or bowing that exceeds the limits specified in Chapter 65.		
	Tail rotor drive adapters — Distortion beyond the limits specified in Chapter 66.		
	A rotating system torque spike is defined as any other incident that results in a rapid deceleration of the drive system. These incidents include, but are not limited to, incidents where large foreign objects are ingested through the gear mesh in any gearbox.		
	When any of these incidents is confirmed, perform the following inspection.		

CONDITIONAL INSPECTIONS

5-36. AFTER BLADE STRIKE OR OTHER ROTATING SYSTEM TORQUE SPIKE (CONT)

DATA REFERENCE	INSPECTION TASK DESCRIPTION	INITIAL MECH	INITIAL OTHER
	NOTE Components removed from a helicopter for evaluation following a sudden stoppage shall be evaluated as an interrelated group. Removal records accompanying each component shall cross reference part and serial numbers of other drive system components removed for evaluation.		
	AFTER BLADE STRIKE OR OTHER ROTATING SYSTEM TORQUE SPIKE		
Chapter 65	**1.** Perform a sudden stoppage inspection as follows:		
	NOTE If a tail rotor strike is reason for sudden stoppage inspection, comply with step g through step m.		
	a. Main rotor blades:		
	(1) Visually inspect main rotor blades for evidence of damage. Closely check for skin cracks.		
BHT-205A1-CR&O-1	**(2)** If any blade is damaged sufficiently to require blade replacement, return all blades to an authorized overhaul facility. Make an entry in component record to show reason for removal is sudden stoppage. Refer to the BHT-205A1-CR&O-1 for repair limits.		
	(3) If no evidence of damage is found on any blade, all blades may be retained in service.		
	b. Main rotor hub:		
	(1) If main rotor blades were not damaged sufficiently to require blade replacement, main rotor hub may be retained in service.		
BHT-205A1-CR&O-1	**(2)** If main rotor blade(s) were damaged sufficiently to require replacement, overhaul main rotor hub. Make an entry in the component record to show reason for removal is blade strike or torque spike.		

CONDITIONAL INSPECTIONS

5-36. AFTER BLADE STRIKE OR OTHER ROTATING SYSTEM TORQUE SPIKE (CONT)

DATA REFERENCE	INSPECTION TASK DESCRIPTION	INITIAL MECH	INITIAL OTHER
	c. Pylon control components:		
BHT-205A1-CR&O-1	**(1)** If one or more of the following discrepancies in step (a) through step (d) are found, swashplate assembly and hub and sleeve assembly shall be removed and an overhaul evaluation shall be performed. Make an entry in the component record to show reason for removal is blade strike or torque spike.		
	(a) Severe main rotor blade damage sufficient to require replacement.		
	(b) Pitch horn failure.		
	(c) Control tube buckled or broken.		
	(d) Transmission main support case mounting leg broken.		
	(2) If none of the conditions exist as listed in step (1), perform a close visual inspection. If no evidence of damage is found, swashplate assembly and hub and sleeve assembly may be retained in service.		
	d. Replace all rotating control bolts. Discard removed bolts.		
BHT-205A1-CR&O-1	**e.** Remove and disassemble main driveshaft. Visually inspect components for damage in accordance with BHT-205A1-CR&O-1. If no visual evidence of damage is detected, reassemble. If damage is detected, perform an overhaul evaluation. Make an entry in the component record to show reason for removal is blade strike or torque spike.		
	f. Transmission and mast assembly:		
BHT-205A1-CR&O-1	**(1)** If mast is visibly bent or twisted, the mast assembly shall be scrapped and the transmission assembly shall be overhauled. The lower planetary spider and lower mast bearing shall be scrapped. Make an entry in the component record to show reason for removal is blade strike or torque spike.		

CONDITIONAL INSPECTIONS

5-36. AFTER BLADE STRIKE OR OTHER ROTATING SYSTEM TORQUE SPIKE (CONT)

DATA REFERENCE	INSPECTION TASK DESCRIPTION	INITIAL MECH	INITIAL OTHER
	NOTE If transmission and mast assembly are removed for overhaul evaluation, both components shall be evaluated for serviceability as a set.		
BHT-205A1-CR&O-1	**(2)** If blade strike incident was confirmed but the main rotor mast is not visibly bent or twisted, an overhaul evaluation of the main rotor mast assembly and transmission assembly shall be performed. Make an entry in component record to show reason for removal is blade strike or torque spike.		
	g. Tail rotor driveshaft hanger assemblies:		
	(1) If a tail rotor driveshaft has been damaged beyond the limits specified in Chapter 66 due to contact with a main rotor blade or other similar circumstances, the hanger assemblies to which damaged shaft was attached shall be scrapped. If a tail rotor driveshaft is visibly twisted, all hanger assemblies and shafts shall be scrapped.		
BHT-205A1-CR&O-1	**(2)** If inspection reveals no damage that would render hanger assemblies unrepairable, hanger assemblies shall have an overhaul evaluation performed. Make an entry in component record to show reason for removal is blade strike or torque spike.		
	h. Tail rotor driveshafts:		
	(1) Remove tail rotor driveshafts and inspect for the following conditions. If one or more of the conditions listed in step (a) through step (d) are noted, all hanger assemblies and shafts shall be scrapped. Note on removal tag that reason for removal is blade strike or torque spike.		
	(a) Curved faces distorted.		
	(b) Tube bent or twisted.		
	(c) Cracks.		
	(d) Loose or sheared rivets.		

CONDITIONAL INSPECTIONS

5-36. AFTER BLADE STRIKE OR OTHER ROTATING SYSTEM TORQUE SPIKE (CONT)

DATA REFERENCE	INSPECTION TASK DESCRIPTION	INITIAL MECH	INITIAL OTHER
Chapter 66	**(2)** If no damage that would render the tail rotor driveshaft unserviceable is noted, further inspect the tail rotor driveshafts in accordance with the requirements specified in Chapter 66.		
	i. Tail rotor hub and blade assembly:		
	(1) If the inspection is being conducted as a result of a confirmed tail rotor blade strike, the tail rotor hub and blade assembly shall be scrapped.		
BHT-205A1-CR&O-1	**(2)** If the inspection is being conducted as a result of a main rotor strike or transmission induced torque spike, the tail rotor hub and blade assembly may remain in service provided there is no visible external damage. If visible damage is noted on tail rotor hub and blade assembly, an overhaul evaluation of the tail rotor hub and blade assembly shall be performed. Make an entry in component record to show reason for removal was blade strike or torque spike.		
BHT-205A1-CR&O-1	**(3)** If the inspection is being conducted as a result of a tail rotor driveshaft, intermediate gearbox assembly or tail rotor gearbox assembly induced torque spike, an overhaul evaluation of the tail rotor hub and blade assembly shall be performed. Make an entry in component record to show reason for removal was blade strike or torque spike.		
	j. Tail rotor gearbox assembly:		
BHT-205A1-CR&O-1	**NOTE** Overhaul the gearbox in accordance with the BHT-205A1-CR&O-1. Make an entry in component record to show reason for removal was blade strike or torque spike.		
	k. Intermediate gearbox:		
BHT-205A1-CR&O-1	**NOTE** Overhaul the gearbox in accordance with the BHT-205A1-CR&O-1. Make an entry in component record to show reason for removal was blade strike or torque spike.		

CONDITIONAL INSPECTIONS

5-36. AFTER BLADE STRIKE OR OTHER ROTATING SYSTEM TORQUE SPIKE (CONT)

DATA REFERENCE	INSPECTION TASK DESCRIPTION	INITIAL MECH	INITIAL OTHER
	l. Transmission sump assembly: **NOTE** If transmission assembly has already been removed for overhaul omit, step l. If no evidence of damage was found in step g through step k, omit step (1) through step (3). **(1)** If damage was found on bearing hanger assemblies, tail rotor driveshaft, intermediate gearbox assembly, or tail rotor gearbox assembly, remove tail rotor output quill assembly from transmission sump assembly.		
BHT-205A1-CR&O-1	**(2)** Inspect output quill pinion for unusual load patterns on both sides of teeth. Inspect sump case internally for gear contact damage. If no damage is found, install quill assembly. Transmission assembly may be retained in service.		
BHT-205A1-CR&O-1	**(3)** If inspection of the tail rotor output quill assembly reveals discrepancies, or gear contact with sump case is evident, remove transmission assembly and an overhaul evaluation of the transmission assembly shall be performed. Make an entry in component record to show reason for removal was blade strike or torque spike. **m.** Install or replace, as applicable, all removed components with like serviceable components. **2.** Refer to Lycoming engine manufacturer's Maintenance Manual for sudden stoppage inspection requirements for engine.		

CONDITIONAL INSPECTIONS

5-37. DELETED

DATA REFERENCE	INSPECTION TASK DESCRIPTION	INITIAL MECH	OTHER

CONDITIONAL INSPECTIONS

5-38. DELETED

DATA REFERENCE	INSPECTION TASK DESCRIPTION	INITIAL MECH	OTHER

CONDITIONAL INSPECTIONS

5-39. OVERSPEED

DATA REFERENCE	INSPECTION TASK DESCRIPTION	INITIAL MECH	INITIAL OTHER
	DATE: _____ **W.O.** _____ **FACILITY:** _____ **HELICOPTER S/N:** _____ **REGISTRY NO.:** _____ **TOTAL TIME:** _____ **SIGNATURE:** _____		
	Overspeed is defined as any incident in which 110% main rotor RPM is exceeded and/or engine overspeed limits in engine manufacturer's manual are exceeded.		
	NOTE Components removed from helicopter following an overspeed shall be evaluated as an interrelated group. Annotate Historical Service Records that reason for removal was Overspeed.		
	1. Perform overspeed inspection as follows:		
	a. Refer to engine manufacturer's inspection guide for engine overspeed and inspection requirements.		
	b. Main rotor hub assembly.		
	(1) Remove main rotor hub. Remove main rotor blades.		
BHT-205A1-CR&O-1	**(2)** Perform an overhaul conditional evaluation inspection. Make an entry in component record to show that reason for removal was Overspeed.		
BHT-205A1-CR&O-1	**(3)** Inspect main rotor blades retention bolts and drag brace bolts.		
	c. Main rotor blades.		

CONDITIONAL INSPECTIONS

5-39. OVERSPEED (CONT)

DATA REFERENCE	INSPECTION TASK DESCRIPTION	INITIAL MECH	INITIAL OTHER
	(1) Inspect main rotor skin for wrinkles and deformation. **(2)** Remove each rotor blade tip cap and inspect inertia weight for looseness. Reinstall tip cap. **(3)** If no discrepancies are found in inspections outlined in step (1) and step (2) above, the main rotor can be retained in service. **(4)** If discrepancies are found in step (1) and step (2) above, return both blades to a Bell Helicopter Textron authorized blade repair facility. Make an entry in component record to show that reason for removal was Overspeed. Indicate percent and duration if known. **d.** Tail rotor hub and blades. **(1)** Remove tail rotor hub and blade assembly. **(2)** Remove tail rotor blades. **(3)** Replace tail rotor blade retention bolts. **e.** Tail rotor blades. **(1)** Check for bond separations anywhere on the blade. If any separation exists, scrap the blade. **(2)** If any movement of the tip or root end balance weights has occurred, scrap the blade. **(3)** Check the retention bushings for evidence of looseness. If any bushing is loose, scrap the blade. **(4)** If blades pass the above inspection requirement and no other discrepancies exist, then retain the blade in service. **f.** Remove and condemn only the long tail rotor driveshaft 204-040-620-3 or -7.		

CONDITIONAL INSPECTIONS

5-39. OVERSPEED (CONT)

DATA REFERENCE	INSPECTION TASK DESCRIPTION	INITIAL MECH	INITIAL OTHER
	g. Perform a close inspection of the following components. If no visual damage is found, the components may be retained in service. **(1)** Main transmission. **(2)** Intermediate gearbox. **(3)** Tail rotor gearbox. **(4)** Main rotor mast. **(5)** Main input driveshaft. **(6)** Tail rotor driveshaft hangers. **(7)** Stabilizer bar. **(8)** Swashplate. **(9)** Scissors and sleeve. **(10)** Tail rotor hub. **(11)** Tail rotor driveshaft 204-040-620-11. **h.** Install a serviceable main rotor hub and blade assembly. Install serviceable tail rotor blades. Balance and install tail rotor hub and blade assembly.		

CONDITIONAL INSPECTIONS

5-40. OVERTORQUE

DATA REFERENCE	INSPECTION TASK DESCRIPTION	INITIAL MECH	INITIAL OTHER
	DATE: _____ **W.O.** _____ **FACILITY:** _____ **HELICOPTER S/N:** _____ **REGISTRY NO.:** _____ **TOTAL TIME:** _____ **SIGNATURE:** _____ Overtorque is defined as any incident in which torsional loads are introduced into the helicopter dynamic system in excess of established limits. **NOTE** Components removed from helicopter following an overtorque shall be evaluated as an interrelated group. Annotate Historical Service Records that reason for removal was Overtorque. **1.** Refer to engine manufacturer's inspection guide for engine overtorque inspection limits. **2.** When overtorque has not exceeded 56 PSI, perform thorough visual inspection of the following components. If inspection does not reveal any discrepancies or obvious damage to components, they may be retained in service. **a.** Main rotor blades. **b.** Tail rotor blades. **c.** Main Rotor hub. **d.** Tail rotor hub.		

CONDITIONAL INSPECTIONS

5-40. OVERTORQUE (CONT)

DATA REFERENCE	INSPECTION TASK DESCRIPTION	INITIAL MECH	INITIAL OTHER
	e. Intermediate gearbox. **f.** Tail rotor gearbox. **g.** Tail rotor driveshafts. **h.** Tail rotor driveshaft hangers. **i.** Stabilizer bar assembly. **j.** Swashplate. **k.** Scissors and sleeve assembly. **l.** Main driveshaft. **m.** Mast. **n.** Transmission. **3.** When overtorque exceeds 56 PSI but does not exceed 61 PSI: **a.** Perform thorough visual inspection of components listed in step 2 above. **b.** Inspect main transmission chip detector. **c.** Inspect main transmission internal filter and pump inlet screen. **d.** If metal particles indicating internal failure are found, remove the transmission for overhaul evaluation. Make entry in component record that reason for removal was Overtorque. Remove all transmission system oil lines and oil cooler. Replace external oil filter element. Flush and reinstall lines. Install new oil cooler. Tag old cooler, metal particle contaminated, and forward to overhaul facility.		

CONDITIONAL INSPECTIONS

5-40. OVERTORQUE (CONT)

DATA REFERENCE	INSPECTION TASK DESCRIPTION	INITIAL MECH	INITIAL OTHER
	e. If chip detector, internal filter, and pump inlet screen appear normal and there is no evidence of internal failure, operate the transmission for 5 hours, then check chip detector, internal filter, and pump inlet screen. If chip detector, filter, and screen inspection do not reveal particles, the transmission is satisfactory for service. If metal particles are found or if there is an evidence of internal failure, remove the transmission for overhaul evaluation. Clean oil lines, replace oil cooler, replace external oil filter element, and make record entries as prescribed in preceding step d. **f.** Replace main rotor hub pillow block bolts 204-011-171-1 (only), if installed. **g.** Remove fifth mount bolts, and remove fifth mount. Perform a thorough inspection of bolts and fifth mount support. Check for bent bolts and bent fifth mount support. Check for proper bolt hole alignment between transmission and fifth mount support. Install fifth mount. **4.** When overtorque has exceeded 61 PSI: **a.** Remove and condemn long tail rotor driveshaft 204-040-600-3 or -7. **NOTE** Component removal record of dynamic components shall reflect Overtorque as reason for removal. **b.** Return following components to an overhaul facility for overhaul evaluation. **(1)** Transmission. **(2)** Main driveshaft. **(3)** Main rotor hub. **(4)** Mast. **(5)** Perform thorough visual inspection of other components outlined in step 2 above.		

CONDITIONAL INSPECTIONS

5-40. OVERTORQUE (CONT)

DATA REFERENCE	INSPECTION TASK DESCRIPTION	INITIAL MECH	INITIAL OTHER
	c. Remove fifth mount bolts, and remove fifth mount. Perform a thorough inspection of bolts and fifth mount support. Check for bent bolts and bent fifth mount support. Check for proper bolt hole alignment between transmission and fifth mount support. Install fifth mount. **d.** Install serviceable components.		

CONDITIONAL INSPECTIONS

5-41. COMPRESSOR STALL OR SURGE

DATA REFERENCE	INSPECTION TASK DESCRIPTION	INITIAL MECH	INITIAL OTHER
	DATE: _____ **W.O.** _____ **FACILITY:** _____ **HELICOPTER S/N:** _____ **REGISTRY NO.:** _____ **TOTAL TIME:** _____ **SIGNATURE:** _____ Engine compressor stall or surge is characterized by a sharp rumble or a series of load sharp reports, severe engine vibration and a rapid rise in exhaust gas temperature (EGT), depending on severity of surge. When a surge has been reported, progressively perform step 1, step 2, and step 3, as indicated by discrepant conditions. **NOTE** Components removed from a helicopter following a compressor stall or surge shall be evaluated as an interrelated group. Annotate Historical Service Records that reason for removal was Compressor Stall. Discuss circumstances of reported compressor stall with pilot. Determine N1 speed at which reported stall occurred. Check helicopter and engine log for any pertinent history. **1.** Power plant. **a.** Examine inlet screen for blockage. **b.** Inspect the engine in accordance with engine manufacturer's inspection guide. **c.** If compressor is dirty, wash per approved engine manufacturer's method.		

CONDITIONAL INSPECTIONS

5-41. COMPRESSOR STALL OR SURGE (CONT)

DATA REFERENCE	INSPECTION TASK DESCRIPTION	INITIAL MECH	INITIAL OTHER
	2. Power train. **a.** If compressor stall occurs below 85% N1 speed, comply with the following step (1) and step (2). **(1)** Remove magnetic chip detectors from transmission, intermediate gearbox, and tail rotor gearbox, and inspect for metal particles. **(2)** If no evidence of damage is found on tailboom vertical fin and no indication of metal particles are found on chip detectors, clean chip detectors and reinstall. Return helicopter to flight status and repeat chip detector inspection in 5 to 10 hours. If positive indication of damage is found on tailboom pylon or metal chips are found on chip detectors, on initial or 5 to 10 hour inspection, comply with step b, substep (1) through substep (4). **b.** If compressor stall occurs at 85% N1 or above, comply with the following step (1) through step (4) and step 3. **(1)** Remove and condemn long tail rotor driveshaft 204-040-620-3 and -7. **(2)** Remove tail rotor gearbox from helicopter and remove input quill. Inspect gear teeth on pinion and gear for damage with a 10X magnifying glass. If no evidence of scoring or scuffing is found and there is no other damage that would render the gearbox unserviceable, it may be reassembled and reinstalled for continued use. If gear teeth are scored or scuffed or there is other damage that would render gearbox unserviceable, replace gearbox. **(3)** Remove input and output drive quill from intermediate gearbox and inspect gear teeth on pinion and gear for damage with a 10X magnifying glass. If no evidence of scoring or scuffing is found and there is no mechanical damage that would render gearbox unserviceable, reassemble and return to service. If gear teeth are scuffed or scored or gearbox has sustained other damage, replace gearbox.		

CONDITIONAL INSPECTIONS

5-41. COMPRESSOR STALL OR SURGE (CONT)

DATA REFERENCE	INSPECTION TASK DESCRIPTION	INITIAL MECH	INITIAL OTHER
	(4) Remove the tail rotor drive quill from the transmission and inspect the gear teeth for damage with a 10X magnifying glass. If there is no indication of scoring or scuffing and there is no other damage that would render the transmission unserviceable, it is suitable for continued use. If gear teeth are scored or scuffed there is other damage that would render the transmission unserviceable, replace transmission and comply with step (5).		
BHT-205A1-CR&O-1	**NOTE** Perform an overhaul evaluation on tail rotor hub and blade in accordance with BHT-205A1-CR&O-1. Make an entry in component record to show that reason for removal was Compressor Stall.		
	(5) If transmission is replaced, the tail rotor bearing hanger and tail rotor hub and blade must also be replaced and procedures outlined in step (a) through step (e) performed.		
	(a) Remove inboard and outboard drag brace bolts. Check bolts for deformation, and perform a magnetic particle inspection. If satisfactory, return to service.		
	(b) Visually inspect stabilizer bar outer tubes for bending. (Allowable deflection is 0.150 inch (3.81 mm) in each tube.)		
	(c) Remove main rotor pillow blocks from main rotor yoke and check for deformation of bushings and bushing holes in pillow blocks and yoke.		
	(d) Perform close visual inspection of all other main rotor components.		
BHT-205A1-CR&O-1	**(e)** If any discrepancies are noted as a result of inspection in step (a) through step (d), remove and replace main rotor hub and blade assembly, stabilizer bar assembly, and mast assembly. Removed assemblies shall have an overhaul evaluation performed. Make an entry in component records to show that reason for removal was Compressor Stall.		

CONDITIONAL INSPECTIONS

5-41. COMPRESSOR STALL OR SURGE (CONT)

DATA REFERENCE	INSPECTION TASK DESCRIPTION	INITIAL MECH	INITIAL OTHER
	3. Airframe. **a.** Check tailboom vertical fin for evidence of damaged skin panels and/or structure and rivets for looseness and/or sheared heads. If inspection does not indicate evidence of damage, return helicopter to service. If positive evidence of damage is found comply with step b through step e. **b.** Remove skin from tailboom vertical fin adjacent to tail rotor gearbox mounting. Inspect all support structures in this area and repair as required. Install new skin. **c.** Make close visual inspection of complete tailboom structure for distortion, buckles, skin cracks, and sheared or loose rivets, paying particular attention to tailboom attachment points at FS 195 and adjacent fuselage to tailboom structure and intermediate gearbox support structure. **d.** Make close visual inspection of main pylon support and engine mount attachment structure for distortion, buckles, cracks, sheared or loose rivets, etc. **e.** If discrepancies found during inspection in step b, step c, and step d cannot be repaired by FAA Advisory Circular 43.13-1 standard procedures, replace discrepant assembly.		

CONDITIONAL INSPECTIONS

5-42. LIGHTNING STRIKES

DATA REFERENCE	INSPECTION TASK DESCRIPTION	INITIAL MECH	INITIAL OTHER
	DATE: _____ **W.O.** _____ **FACILITY:** _____ **HELICOPTER S/N:** _____ **REGISTRY NO.:** _____ **TOTAL TIME:** _____ **SIGNATURE:** _____ **NOTE** In all instances below, if significant damage has been found in any area, inspection shall be expanded in those areas until it extends beyond zone of damage. Any damage found anywhere on helicopter shall be recorded in detail and copies of these records shall be provided along with any component returned for overhaul to assist overhauling facility in evaluating component. When helicopter is suspected of receiving a lightning strike, perform the following steps: **1.** Visually inspect all external surfaces with particular attention to main rotor blades, stabilizer bar, swashplate, scissor and sleeve, transmission, mast assembly, tail rotor hub and blades, tail rotor gearboxes, vertical fin, and elevator. Check electrical instruments and systems. Verify magnetic compass accuracy (paragraph 5-43). **2.** If visual indications of damage are present, proceed as follows: **a.** Remove main rotor blades and visually inspect. If blades show any of the following indications, scrap blades. **(1)** Inspect blades for signs of burns. Burn marks can be very minute.		

CONDITIONAL INSPECTIONS

5-42. LIGHTNING STRIKES (CONT)

DATA REFERENCE	INSPECTION TASK DESCRIPTION	INITIAL MECH	INITIAL OTHER
	(2) Inspect blades for debond in all bonded areas. **b.** Remove main rotor hub and forward to an overhaul facility for overhaul. Tag hub stating Lightning Strike as reason for removal. Inspect main rotor hub and rotating controls for indication of arcing or burning. **c.** Remove main driveshaft for inspection. If the main driveshaft has crowned tooth couplings, accomplish following step (1) and step (2). If the main driveshaft has flex-frame couplings, proceed to step (3). **(1)** Disassemble couplings to the extent required to lubricate. Clean couplings with drycleaning solvent (C-304). **(2)** Visually inspect couplings for any evidence of arc burning or pitting. Pay special attention to tips, roots, and profiles of male and female coupling teeth. Any evidence of arc burning or pitting is cause for rejection. **(3)** Remove flex-frame coupling driveshaft and return it to Bell Helicopter Textron for evaluation (IL GEN-04-98). Do not disassemble the couplings. **d.** Remove the tail rotor output coupling from the main transmission assembly and all other crown-tooth couplings from the tail rotor drive system for inspection. **(1)** Disassemble to same extent required for coupling repack and clean couplings. **(2)** Visually inspect couplings for any evidence of arc burning or pitting. Pay special attention to the tips, roots, and profiles of male and female coupling teeth. Any evidence of arc burning or pitting is cause for rejection.		
BHT-205A1-CR&O-1	**e.** If main rotor hub and blades, main driveshafts, or tail rotor output coupling exhibit evidence of damage which can be attributed to a lightning strike, remove transmission and mast assembly for overhaul. Tag components stating Lightning Strike as reason for removal. If no evidence of damage is noted on above mentioned components, partially remove and inspect main transmission as follows:		

CONDITIONAL INSPECTIONS

5-42. LIGHTNING STRIKES (CONT)

DATA REFERENCE	INSPECTION TASK DESCRIPTION	INITIAL MECH	INITIAL OTHER
Chapter 66	**(1)** Remove and inspect all transmission chip detectors and debris monitor. **(2)** If any evidence of arc burning or pitting is noted or excessive debris is found, remove transmission and mast assembly for overhaul. Tag components stating Lightning Strike as reason for removal. **(3)** If no evidence of arc burning or pitting is noted, ground run light on skids for 1 hour. Inspect chip detectors and remove and inspect oil filter or debris monitor. Repeat these inspections after accumulating 5 flight hours but prior to 10 flight hours.		
BHT-205A1-CR&O-1	**f.** Inspect tail rotor hub and blades. Scrap blades if indications of burns or debonding are present. Remove tail rotor hub for overhaul. Tag hub stating Lightning Strike as reason for removal. **g.** Remove and inspect tail rotor and intermediate gearbox chip detectors. **h.** If the tail rotor hub and blades, or tail rotor couplings exhibit evidence of damage which can be attributed to a lightning strike, or excessive debris is found on chip detectors, remove tail rotor and intermediate gearboxes and tail rotor driveshaft hangers for overhaul. Tag components stating Lightning Strike as reason for removal. Additionally, the tail rotor driveshafts and attaching hardware shall be visually inspected for evidence of arc burns or pitting. Any evidence of arc burning or pitting is cause for rejection. **i.** If no evidence of arc burning or pitting is noted, operate helicopter light on skids for 1 hour. Inspect chip detectors. Repeat this inspection after accumulating 5 flight hours but prior to 10 flight hours. **3.** If no visual indications of damage are present, proceed as follows: **a.** Remove and inspect all transmission chip detectors.		

CONDITIONAL INSPECTIONS

5-42. LIGHTNING STRIKES (CONT)

DATA REFERENCE	INSPECTION TASK DESCRIPTION	INITIAL MECH	INITIAL OTHER
BHT-205A1-CR&O-1	**(1)** If excessive debris is found on chip detectors, remove transmission and mast assembly for overhaul. **(2)** If little or no debris is found, operate helicopter light on skids for 1 hour. Inspect chip detectors and remove and inspect oil filter or debris monitor. Repeat these inspections after accumulating 5 flight hours but prior to 10 flight hours. **b.** Remove main rotor hub assembly and remove grips. **(1)** Visually inspect bearings for signs of electrical arcing, burning, or delamination. **(2)** Visually inspect pitch change links at drive assembly connections for arcing burns. **(3)** If indications of arcing or burning are present, overhaul main rotor hub, stabilizer bar, and drive assembly. Replace affected pitch change links and attaching hardware. **(4)** If no indications are found, assemble main rotor hub. **4.** Prior to first flight after a suspected or confirmed lightning strike, verify proper function of all drive system component chip detectors as follows: **a.** Remove electrical connector from chip detector. **b.** Remove chip detector and reinstall connector. **c.** With helicopter electrical power on, bridge chip detector gap with a clean conductive object (screwdriver). **d.** Verify proper indication on the CHIP indicator panel and caution panel. Verify illumination of MASTER CAUTION light. **e.** Using a single strand of steel wool to bridge gap of one chip detector, verify proper function of chip burn off system. **f.** Make repairs as required.		

CONDITIONAL INSPECTIONS

5-42. LIGHTNING STRIKES (CONT)

DATA REFERENCE	INSPECTION TASK DESCRIPTION	INITIAL MECH	INITIAL OTHER
	5. When established lightning has struck helicopter, inspections of electrical and instrument systems which follow are mandatory to ensure safety of flight: **a.** Inspect all electrical wiring, bundles, and connectors for burning or electrical arcing. Unplug all connectors and inspect pins and housing for electrical arcing or burning. Inspect interior of all circuit breaker panels for burning or electrical arcing. Replace any wires, connectors, or circuit breakers found to be damaged. **NOTE** Do not test chip detectors for magnetization. If transmission or gearbox magnetic readings are greater than 1 gauss near chip detector, remove chip detector from housing and repeat test. **b.** Inspect main rotor blade and control links, transmission system, driveshafts, gearboxes, and tailboom structure for magnetization. Using a magnetometer with a range no larger than ±5 gauss, place arrow or red dot (depending on magnetometer model) within 0.5 inch (12.7 mm) of item being checked and point it directly at item. If any items or components have a reading greater than 1 gauss, those items shall be degaussed. **c.** Remove and bench test voltage regulator(s). Operationally check DC generator, starter-generator, and inverter(s) for proper operation. Visually inspect generator, starter-generator, and inverter(s) for burns or electrical arcing. If damaged, remove for internal inspection and bench test. **d.** Perform operational check of bussing system. **e.** Inspect transmission and tail rotor and intermediate gearbox chip detectors for proper operation. Remove chip detectors found inoperative. **f.** Perform operational check of interior and exterior lighting system. Replace lamps, bulbs, and lighting assemblies as required.		

CONDITIONAL INSPECTIONS

5-42. LIGHTNING STRIKES (CONT)

DATA REFERENCE	INSPECTION TASK DESCRIPTION	INITIAL MECH	INITIAL OTHER
	g. Perform operational check on all instruments. Remove and repair/replace instruments and sensor found to be defective. **h.** Perform operational check on all caution messages for proper operation. **6.** When it has been established that lightning has struck the helicopter, the inspections of structure which follow are mandatory to ensure safety of flight: **NOTE** Arcing damage on metal components of airframe structure, when cleaned out to twice its visible depth, shall be treated as mechanical damage and damage limits establishes repairability and/or scrap of component. Any other damage, i.e., tears, voids, rupture, etc., directly or indirectly related to lightning strike shall be treated as mechanical damage, also. **a.** Check sandwich panels in suspect areas for voids or debond. If damage is apparent, proceed with normal repair procedures. **b.** Check fixed controls and support system components for possible arcing damage. Bearings in rod ends, bellcranks, and supports should be most susceptible to arcing damage. Check bearings for smooth rotation. Visibly inspect attaching hardware of support for signs of lightning damage, damaged finish and/or burns. If damage is evident, remove supports and inspect mounting holes and mating surfaces for arcing damage. Arcing damages shall be blended out to twice the visible depth, and repaired damages shall not exceed mechanical damage limits. **c.** When apparent lightning has grounded through skid landing gear, remove entire landing gear assembly and inspect crosstubes and airframe support fittings for possible arcing damage; specifically, inspect attaching holes and mating surfaces of the crosstubes directly beneath landing gear bearing/retaining supports. Clean out arcing damage to twice the visible depth. The damage, after cleanup, shall not exceed allowable mechanical damage limits.		

CONDITIONAL INSPECTIONS

5-42. LIGHTNING STRIKES (CONT)

DATA REFERENCE	INSPECTION TASK DESCRIPTION	INITIAL MECH	INITIAL OTHER
	d. Any airframe metal parts not specifically identified above, but are suspect, shall be noted in maintenance log and shall be reinspected prior to next 100 hours of flight. **7.** Inspect avionics systems: **a.** Perform standard proflight test on all avionics systems. If system does not function properly, make necessary repairs. **b.** Inspect antennas for damage. If damaged, repair and make VSWR measurements as necessary or replace.		

CONDITIONAL INSPECTIONS

5-43. MAGNETIC COMPASS MALFUNCTION

DATA REFERENCE	INSPECTION TASK DESCRIPTION	INITIAL MECH	INITIAL OTHER
	DATE: _____ **W.O.** _____ **FACILITY:** _____ **HELICOPTER S/N:** _____ **REGISTRY NO.:** _____ **TOTAL TIME:** _____ **SIGNATURE:** _____ **1.** Check magnetic compass for accuracy. If excessive error is indicated, the compass must be calibrated using standard compensating methods. **2.** After compensating, and while still on the compass rose, swing for residual deviations on 12 symmetrical headings (each 30°). Record compass readings on a compass correction card and install in compass card holder.		

COMPONENT OVERHAUL SCHEDULE

5-44. COMPONENT OVERHAUL SCHEDULE

The Component Overhaul Schedule (Table 5-1) provides the time interval between overhaul for each applicable helicopter component.

WARNING

DO NOT APPLY TOLERANCES TO PARTS WITH A LIMITED AIRWORTHINESS LIFE (CHAPTER 4).

WARNING

DO NOT EXCEED RETIREMENT LIFE FOR CRITICAL COMPONENTS. REFER TO AIRWORTHINESS LIMITATIONS SCHEDULE (CHAPTER 4).

SOME PARTS INSTALLED AS ORIGINAL EQUIPMENT ON MILITARY HELICOPTERS MAY HAVE A LOWER AIRWORTHINESS LIFE AND/OR OVERHAUL SCHEDULE THAN WHEN USED ON A COMMERCIAL HELICOPTER. CONSEQUENTLY, PARTS THAT HAVE BEEN USED ON MILITARY HELICOPTERS SHOULD NOT BE USED ON COMMERCIAL HELICOPTERS.

CAUTION

OVERHAUL SCHEDULE FOR SOME KIT COMPONENTS AND/OR PARTS IS NOT COVERED IN THIS SCHEDULE. REFER TO APPLICABLE SERVICE INSTRUCTIONS FOR KIT COMPONENTS SCHEDULE.

NOTE

Refer to paragraph 5-6 for information on inspection and overhaul tolerance.

NOTE

Neither assignment of a time period for overhaul of a component or failure to assign a time period for overhaul of a component constitutes a warranty of any kind. The only warranty applicable to helicopter and any component is that warranty included in the Purchase Agreement for the helicopter or component.

The overhaul interval specified for any given part number contained in this Component Overhaul Schedule applies to all successive dash numbers (or suffixes) for that item unless otherwise specified.

Table 5-1. Component Overhaul Schedule

NOMENCLATURE	PART NUMBER △1	OVERHAUL INTERVAL (HOURS)
ROTORS		
Stabilizer Bar Assembly	204-011-326-007	△2 1000 hours/ Conditional
Swashplate and Support	204-011-400-013	Conditional
Swashplate and Support	204-011-400-017	Conditional

Table 5-1. Component Overhaul Schedule (Cont)

NOMENCLATURE	PART NUMBER 1	OVERHAUL INTERVAL (HOURS)
ROTORS (CONT)		
Scissors and Sleeve	204-011-401-009/-011	1000 hours
Scissors and Sleeve	204-011-401-019/-021	Conditional
Main Rotor Hub	204-012-101-005	3 2400 hours
Stabilizer Bar Assembly	212-010-300-001	Conditional
Tail Rotor Hub Assembly	212-010-701-ALL	4 1000 hours
Tail Rotor Hub Assembly	212-011-701-ALL	4 2500 hours
POWER TRAIN		
Intermediate Gearbox	204-040-003-037	2000 hours
Mast	204-040-366-013/-015	1000 hours
Mast (with Bearing 212-040-136-001)	204-040-366-015	2500 hours
Mast	204-040-366-017	2500 hours
Mast	204-040-366-021	5 6 5000 hours
Tail Rotor Driveshaft Hangers	204-040-600-009	1000 hours
Transmission	205-040-001-023/-027	1000 hours
Transmission	205-040-001-033/-037/-045/-049/-101	7 2000 hours
Transmission	212-040-001-135	5 7 6000 hours
Rotor Brake Quill	412-040-123-101	8 3000 hours
Tail Rotor Gearbox	209-040-400-001/-007	1000 hours
Intermediate Gearbox	212-040-003-007	3000 hours
Intermediate Gearbox	212-040-003-023	5000 hours
Tail Rotor Gearbox	212-040-004-005	3000 hours
Tail Rotor Gearbox	212-040-004-009	5000 hours

Table 5-1. Component Overhaul Schedule (Cont)

NOMENCLATURE	PART NUMBER (1)	OVERHAUL INTERVAL (HOURS)
POWER TRAIN (CONT)		
Tail Rotor Driveshaft Hangers	212-040-600	3000 hours
HYDRAULIC		
Collective Servo Actuator	205-076-030-001	2400 hours
Anti-torque Servo Actuator	205-076-031-001/-003	Conditional
Cyclic Servo Actuator	205-076-036-007/-009/-011/-013/-101/-103/ -105/-107	1000 hours
Hydraulic Accumulator	205-076-041-001	1000 hours
Anti-torque Servo Actuator	212-076-004-003/-005	(9) 1000 hours
Cyclic Servo Actuator	212-076-005-007	(10) 2500 hours
POWER PLANT		
Fire Extinguisher Container	2241-009	(11) 5 years
Starter Generator	204-060-200-001	1000 hours
MISCELLANEOUS		
Oil Cooler Fan	204-062-540-001	1000 hours

NOTES:

(1) The operating time specified for overhaul of any part number contained in this component overhaul schedule applies to all successive dash numbers (or suffixes) for that item unless otherwise specified.

(2) If tube assemblies 212-010-311-101 or 540-011-319-001 are installed on stabilizer bar assemblies 204-011-326, then the overhaul interval is conditional.

(3) Fluorescent or dye penetrant inspect pillow blocks 204-011-108-113 each 2400 hours or at hub overhaul. (Refer to BHT-205A1-CR&O-1.)

Table 5-1. Component Overhaul Schedule (Cont)

NOTES (CONT):

4 The following items are to be overhauled every 2500 hours of operation:

a. Idler assembly 209-011-711-ALL

b. Lever assembly 209-011-712-ALL

c. Nut, tail rotor retention 212-010-706-ALL

d. Crosshead 212-010-775-ALL

e. Link assembly 209-011-713-ALL

5 Special inspection required at 3000 hours (paragraph 5-32).

6 If mast assembly 204-040-366-021 is installed in transmission prior to 212-040-001-135, then mast assembly overhaul interval is 2500 hours.

7 Overhaul schedule of transmission quills is the same as the transmission in which they are installed, except for the rotor brake quill 8.

8 Overhaul schedule for the rotor brake quill is 3000 hours.

9 If servo actuators have Greene Tweed type seals installed, then overhaul interval is conditional. Servo actuators with assembly date of April 30, 1974 or later were fitted with Greene Tweed type seals at time of manufacture. However, servo actuators without Greene Tweed type seals installed shall be overhauled at 1000 hours.

10 If servo actuators have Greene Tweed type seals installed, then the overhaul interval is 2500 hours. Servo actuators with assembly date April 30, 1974 or later were fitted with Greene Tweed type seals at time of manufacture. However, servo actuators without Greene Tweed type seals installed shall be overhauled at 1000 hours.

11 Hydrostatic test in accordance with specification DOT-4 DA, DOT-4 DS700, or DOT-SP-7945, as marked on the reservoir, every 5 years or prior to refill after leakage or discharge. Extensions to this item are not permitted (Information Letter (IL) GEN-93-52).