BHT-206L1-MM-1

BELL 206L1

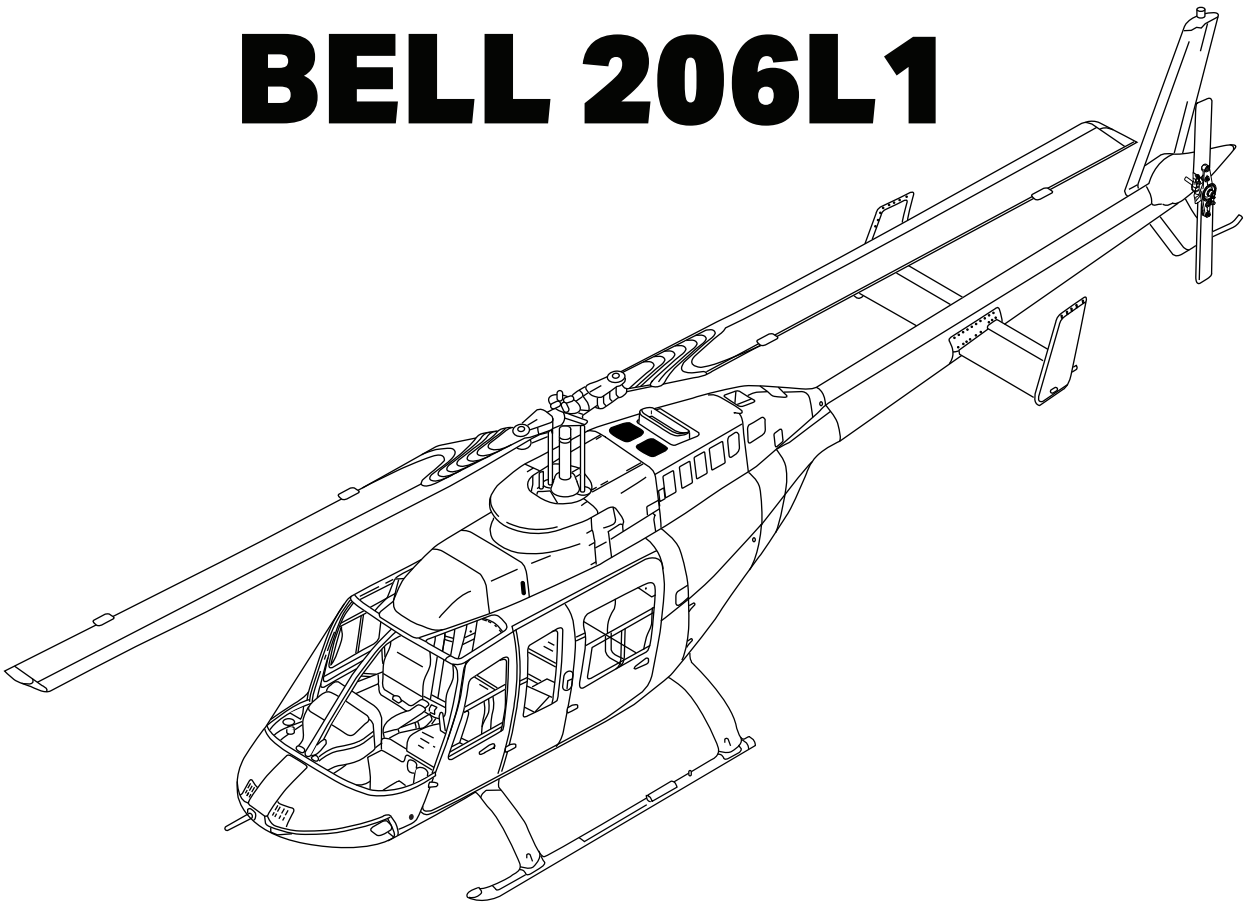

MAINTENANCE MANUAL

VOLUME 1

GENERAL INFORMATION

NOTICE

The instructions set forth in this manual, as supplemented or modified by Alert Service Bulletins (ASB) or other directions issued by Bell Textron Inc. and Airworthiness Directives (AD) issued by the applicable regulatory agencies, shall be strictly followed.

Maintenance Manual also applicable to 206L1 helicopters with Engine Upgrade kit 206-706-520 installed per BHT-206-SI-2050, and 206L1+ helicopters (Increased Gross Weight kit 206-706-530 installed per BHT-206-SI-2052).

COPYRIGHT NOTICE
COPYRIGHT 2026
BELL TEXTRON INC. AND
BELL TEXTRON CANADA LIMITED.

ALL RIGHTS RESERVED

POST OFFICE BOX 482 • FORT WORTH, TEXAS 76101

3 DECEMBER 1977

REVISION 43 — 10 JULY 2026

Export Classification C, ECCN EAR99

PROPRIETARY RIGHTS NOTICE

These data are proprietary to Bell Textron Inc. Disclosure, reproduction, or use of these data for any purpose other than helicopter operation or maintenance is forbidden without prior written authorization from Bell Textron Inc.

DESTINATION CONTROL STATEMENT

WARNING — This document contains technical data whose export is restricted by the Arms Export Control Act (Title 22, U.S.C., Sec 2751, et. seq.) or the Export Administration Act of 1979, as amended, Title 50, U.S.C., App. 2401 et. seq. Violations of these export laws are subject to severe criminal penalties. Disseminate in accordance with provisions of DoD Directive 5230.25.

WARNING

THIS MANUAL APPLIES ONLY TO HELICOPTERS AND COMPONENTS MAINTAINED IN ACCORDANCE WITH BELL TEXTRON INC. APPROVED PROCEDURES USING BELL APPROVED PARTS.

ALL INSPECTION, REPAIR AND OVERHAUL PROCEDURES PUBLISHED BY BELL, INCLUDING PART RETIREMENT LIFE, ARE BASED SOLELY ON THE USE OF BELL PARTS THAT HAVE BEEN MAINTAINED USING BELL APPROVED DATA. THE DATA PUBLISHED HEREIN OR OTHERWISE SUPPLIED BY BELL IS NOT APPLICABLE TO NON-BELL PARTS OR PARTS THAT HAVE BEEN REPAIRED USING DATA AND/OR PROCESSES NOT APPROVED BY BELL.

BELL IS NOT RESPONSIBLE FOR ANY PART OTHER THAN THOSE THAT IT HAS APPROVED.

BEFORE PERFORMING ANY PROCEDURE CONTAINED IN THIS MANUAL YOU MUST INSPECT THE AFFECTED PARTS AND RECORDS FOR EVIDENCE OF ANY MANUFACTURE, REPAIR, REWORK OR USE OF A PROCESS NOT APPROVED BY BELL.

IF YOU IDENTIFY OR SUSPECT THE USE OF PARTS NOT AUTHORIZED BY BELL, EITHER REMOVE THE AFFECTED ITEM FROM THE AIRCRAFT OR OBTAIN INSTRUCTIONS FOR CONTINUED AIRWORTHINESS FROM THE MANUFACTURER OR THE ORGANIZATION THAT APPROVED THE REPAIR.

CUSTOMER SUPPORT AND SERVICES

Flying smart means that no matter where you are, or what time it is, you can make a call and get additional information, clarification, or advice on a technical or operational issue concerning your helicopter or information contained in our Technical Publications. Product Support Engineering (PSE) is just a phone call away and may be contacted as follows:

Commercial Models

Phone: 450-437-2862 or 800-363-8023 (U.S./Canada)

Fax: 450-433-0272

E-mail: productsupport@bellflight.com

Model 210, HUEY II and All Bell's Active and Surplus Military Medium Helicopter Models

Phone: 817-280-3548

Fax: 817-280-2635

E-mail: mts-medium@bellflight.com

Model OH-58, TH-67, TH-57, Both Active and Surplus Military

Phone: 817-280-3548

Fax: 817-280-2635

E-mail: mts-light@bellflight.com

For additional information on Customer Support and Services as well as Product Support Engineering (PSE) and your local Customer Service Engineering (CSE) network, please access https://www.bellflight.com/support.

LOG OF REVISIONS

Insert latest revision pages and dispose of superseded ones.

On a revised page, the text and/or illustration affected by the latest revision is shown by a vertical line. A revised page with only a vertical line next to the page number indicates that text has shifted or that non-technical correction(s) were made on that page.

Original	0	03 DEC 77
Revision	1	20 NOV 78
Revision	2	30 JUL 79
Revision	3	01 OCT 79
Revision	4	01 FEB 80
Revision	5	08 FEB 80
Revision	6	24 JUN 81
Revision	7	15 SEP 81
Revision	8	09 NOV 81
Revision	9	18 NOV 81
Revision	10	08 FEB 82
Revision	11	24 JUN 82
Revision	12	01 MAR 83
Revision	13	31 MAR 84
Revision	14	07 MAR 85
Revision	15	01 JUN 87
Revision	16	22 AUG 95
Revision	17	23 APR 01
Revision	18	14 MAY 02
Revision	19	09 DEC 02
Revision	20	22 DEC 03
Revision	21	07 JUL 06
Revision	22	09 OCT 06
Revision	23	30 APR 08
Revision	24	31 OCT 08
Revision	25	05 JAN 09
Revision	26	26 MAY 09
Revision	27	25 SEP 09
Revision	28	30 NOV 09
Revision	29	27 SEP 10
Revision	30	25 FEB 11
Revision	31	08 APR 11
Revision	32	29 FEB 12
Revision	33	01 JUN 12
Revision	34	07 NOV 12
Revision	35	07 JUN 13
Revision	36	29 MAY 15
Revision	37	10 MAR 17
Revision	38	08 JUN 18
Revision	39	25 JUN 19
Revision	40	30 SEP 22
Revision	41	20 MAR 24
Revision	42	25 JUL 24
Revision	43	10 JUL 26

LOG OF PAGES

Page No.	Rev No.
Cover	41
Title	43
PN	41
Warning	40
CSS	40
A – B	43
C – D	42
Help	34
Customer Feedback	41
Helicopter Sales Notice	41
Warranty Page 1	40
Warranty page 2	40
Warranty Page 3	40
BR	39
TR	39
i/ii	39
Chapter 1	
1/2	24
3	33
4 – 6	24
Chapter 4	
1 – 3	39
4	43
5 – 6	39
7	43
8 – 12	41
13 – 14	39
Chapter 5	
1	30
2	40
3 – 5	30
6	35
6A/6B	35
7	30
8	35
9	30
10	35
11 – 12	42
13/14	42
15/16	30
17	30
18	37
19 – 23	30
24 – 26	35
27	30
28	40
29	30
30 – 32	31
32A/32B	31
33 – 36	30
37/38	30
39 – 46	30
47/48	30
49/50	30
51 – 54	30
55/56	30
57 – 62	30
63/64	30
65 – 66	30
67	40
68 – 69	30
70	31
71/72	31
73 – 78	30
79/80	30
81 – 85	30
86	36
87/88	30
89 – 92	30
93/94	30
95	37
96 – 104	30

LOG OF PAGES (CONT)

Page No.	Rev No.
105/106	30
107/108	30
109 – 112	30
113/114	30
115/116	30
117 – 118	30
119/120	37
121/122	33
123	30
124 – 126	37
127/128	35
129/130	36
131/132	30
133 – 134	42
135	33
136	37
137/138	30
139 – 142	30
143/144	30
145 – 146	30
147/148	30
149/150	42
151/152	37
153 – 156	30
156A – 156B	42
157/158	30
159 – 161	30
162 – 163	35
164 – 165	30
166 – 170	35
171/172	35
173	35
174	30
175/176	35
177	30
178 – 180	35
181/182	35
183	30
184	35
185 – 188	30
189 – 196	35
197/198	30
199 – 200	40
201/202	40
203 – 204	40
205/206	40
Chapter 6	
1 – 4	0
Chapter 7	
1/2	0
3	7
4	0
Chapter 8	
1/2	24
3 – 6	24
7 – 8	38
9	24
10	40
11 – 15	24
16 – 18	40
Chapter 9	
1 – 2	0
3/4	0
Chapter 10	
1	24
2	0
3 – 4	1
5/6	24
Chapter 11	
1/2	24
3 – 8	24
9	30
10 – 16	24
Chapter 12	
1	35
2	31
3/4	21
5	35
6	21
7/8	21
9	21
10 – 12	24
13 – 14	21
15/16	24
17 – 19	24
20 – 21	21
22	24
23 – 24	21
25	38
26	24
27 – 30	38
31 – 32	31
33 – 36	38
37	31
38	38
39	35
40	38
41 – 42	21
43 – 44	38
Chapter 18	
1 – 2	38
3/4	38
5 – 10	38
11/12	38
13 – 49	38
50 – 52	42
53 – 70	38
71/72	38
73 – 82	38
83/84	38
Chapter 21	
1/2	24
3 – 14	24
Chapter 25	
1	7
2 – 5	0
6	7
7	0
8	7
9/10	0
11 – 12	7
13/14	7
Chapter 26	
1 – 2	0
Chapter 27	
1	42
2	40
2A/2B	40
3 – 4	38
4A /4D	38
5	0
6	7
7	0
8	24
8A – 8D	24
9 - 10	42

LOG OF PAGES (CONT)

Page No.	Rev No.
10A/10B	42
11	42
12	38
12A/12B	40
13	24
14	13
14A/14B	42
15 - 16	42
17 – 18	38
18A/18B	38
19	24
20	42
20A – 20B	42
21	42
22 – 24	0
25	15
26	7
26A/26B	7
27	15
28	0
29 - 30	42
31 – 37	24
38 – 46	38
47/48	38
49 – 56	38
57	40
57A – 57J	40
57K/57L	40
58 – 62	38
Chapter 28	
1 – 2	38
3/4	38
5 – 50	38
51/52	38
Chapter 29	
1 – 2	37
3/4	37
5 – 46	37
Chapter 30	
1 – 2	0
Chapter 32	
1	21
2	15
3 – 4	0
5 – 12	21
13/14	21
15 – 16	21
Chapter 52	
1	24
2	40
2A – 2B	24
3	0
4 – 6	7
7	24
8 – 11	0
12	24
13 – 14	0
15	24
16 – 19	0
20	24
21 – 22	1
22A – 22B	1
22C/22D	1
23	1
24	24
24A/24B	24
25	0
26	24
26A/26B	24
27/28	40
Chapter 53	
1 – 2	40
3 – 8	21
9/10	21
11	40
12 – 14	21
15 – 16	40
16A – 16B	40
17 – 22	40
22A/22B	40
23 – 24	21
Chapter 56	
1 – 10	40
11/12	40
13 – 18	40
19/20	40
21 – 36	40
37/38	40
Chapter 65	
1 – 2	38
3 – 4	38
5 – 13	38
14	42
15 – 44	38
45/46	38
47 – 64	38
65/66	38
Chapter 66	
1 – 2	37
2A	30
2B – 2C	37
2D	42
2E/2F	37
2G/2H	37
3	13
4 – 8	0
9	24
10	0
11	7
12	13
12A/12B	13
13 – 14	24
14A/14B	24
15 – 18	24
18A – 18D	24
18E/18F	24
18G – 18N	24
19 – 20	24
20A – 20B	24
21	24
22	42
22A/22B	42
23	37
24	42
24A/24B	42
25	42
26	37
26A – 26H	37
27 – 29	24
30	0
30A/30B	24
31	24
32	37
33	0
34 – 36	24
36A – 36B	24
37 – 38	24
38A/38B (Deleted)	13
39 (Deleted)	24
40 – 42	24
42A/42B	24

LOG OF PAGES (CONT)

Page No.	Rev No.
43 – 51	24
52	37
52A	24
52B – 52D	37
52E – 52G	24
52H – 52J	37
53 – 54	24
54A – 54B	24
55 – 56	24
57 – 58	37
59	24
60 – 62	37
63	24
64 – 66	37
66A/66B	40
67	15
68	24
68A/68B	15
69	9
70	24
71	7
72	42
72A/72B	42
72C/72D	42
73	42
74	13
74A/74B	42
75 – 76	42
77	37
78	42
78A/78B	42
79	37
80	0
81	13
82	42
82A – 82B	42
83 – 86	37
87	42
88 – 92	37
93/94	37
Chapter 71	
1 – 6	40
7 – 11	24
12 – 14	40
15 – 16	24
17	40
18	24
19 – 21	40
22 – 23	24
24	40
25/26	40
27	40
28	24
29/30	40
31	40
32	24
33/34	40
34A – 34D	40
35 – 36	40
37 – 41	24
42 – 44	40
45 – 46	24
47 – 48	40
49/50	40
51	40
52 – 53	24
54 – 57	40
58 – 59	24
60 – 62	40
63/64	24
65 – 68	40
Chapter 76	
1/2	36
3 – 15	36
16	40
17 – 19	36
20 – 21	40
22	36
23/24	36
Chapter 79	
1	0
2	24
3	0
4	24
5 – 6	7
7	13
8	24

HELP

EVALUATE

LOGISTICS

PUBLICATIONS

Have you found something wrong with this manual — an error, an inconsistency, unclear instructions, etc.? Although we strive for accuracy and clarity, we may make errors on occasion. If we do and you discover it, we would appreciate your telling us about it so that we can change whatever is incorrect or unclear. Please be as specific as possible.

Your complaint or suggestion will be acknowledged and we will tell you what we intend to do.

You may use the enclosed Customer Feedback form, as applicable, to inform us where we have erred.

Your assistance is sincerely appreciated.

CUSTOMER FEEDBACK

Return by fax to Product Support Engineering (450) 433-0272, e-mail to publications@bellflight.com, or mail to the address on the next page.

Manual Title: _____

Manual Number (if assigned): _____

Date of Issue: _____

Date of Last Revision: _____

Section, Chapter, Paragraph Affected: _____

Your Feedback: _____

_____

_____

_____

Now Reads: _____

_____

_____

_____

Should Read: _____

_____

_____

_____

_____

Your Name: _____

Address: _____

_____

Position: _____ Telephone No.: _____

Company: _____ Fax No.: _____

Reference No. (your initials and date): _____

(If you choose to mail this form, fold in thirds with address exposed, tape and mail.)

Export Classification C, ECCN EAR99

TAPE HERE

From _____

_____

_____

POSTAGE
NECESSARY

Product Support Engineering
12,800 rue de l'Avenir
Mirabel, Québec, Canada, J7J 1R4

FOLD ON DOTTED LINES AND TAPE

Export Classification C, ECCN EAR99

TAPE HERE

IMPORTANT

HELICOPTER SALES NOTICE

Please complete this form and return by mail, e-mail (publications@bellflight.com), or fax (817-280-6466, Attention: CPDC). This will ensure that the new owners/operators receive updates to their ***Bell Textron Technical Manuals*** and ***Bulletins.***

Model of Helicopter Sold or Purchased _____

Serial and Registration Number _____

Name of ***New Owner*** (company or individual) _____

Name of ***New Operator*** _____

Future Publications to be mailed to this address:

Address _____

City _____

State/Province _____

Zip/Postal Code _____

Country _____

Fax No. _____ Telephone No. _____

E-mail Address _____

Register for access to electronic publications at www.bellflight.com

Export Classification C, ECCN EAR99

TAPE HERE

From _____

_____

_____

NO POSTAGE
NECESSARY
IF MAILED
IN THE
UNITED STATES

BUSINESS REPLY MAIL

FIRST CLASS PERMIT NO. 1744 FORT WORTH, TEXAS

BELL

COMMERCIAL PUBLICATION DISTRIBUTION CENTER
P.O. BOX 482
FORT WORTH, TEXAS 76101-0482

FOLD ON DOTTED LINES AND TAPE

TAPE HERE

Export Classification C, ECCN EAR99

SPARE PARTS WARRANTY

WARRANTY: Seller warrants each new helicopter part or helicopter part reconditioned by Seller to be free from defect in material and workmanship under normal use and service and if installed on Bell model helicopters for up to 1000 hours of operation, one (1) year from date of installation, or two (2) years from date of shipment by Seller, whichever occurs first. Seller assigns each manufacturer's warranty to Buyer to the extent such manufacturer's warranty exists and is assignable.

Parts, components and assemblies of all helicopter parts may have been restored or reworked due to mars, blemishes, dents or other irregularities during the manufacturing process. Such restoration and/or rework are permitted under Seller's approved manufacturing and engineering processes and guidelines. The restoration and/or rework so completed do not render such items defective in material or workmanship.

Seller's sole obligation under this warranty is limited to the repair or replacement of parts which are determined to Seller's reasonable satisfaction to have been defective within the applicable warranty period as described above. Replacement of parts may be either new or reconditioned at Seller's election and at the lowest allowable maintenance level contained in Seller's manuals, service bulletins or applicable supplier manuals. Seller shall also reimburse reasonable freight charges, excluding insurance, customs fees, duties, handling fees, and taxes. Seller shall not reimburse Buyer for any parts repaired or replaced outside of the Seller's Warranty Claims Process unless express prior written authorization is granted by Seller's Warranty Department to Buyer for such repair or replacement.

NO FAULT FOUND: In the event Seller determines, after evaluation of a returned part, that a defect does not exist, then Buyer shall pay all expenses incurred by Seller related to the return including, but not limited to, costs incurred in shipping and evaluating the part and cost for any replacement part and restocking of the part. In addition, Seller shall not reimburse Buyer for any costs related to the removal or reinstallation of such a part.

WARRANTY CLAIM PROCESS: Defective parts must be reported in writing to the Seller's Warranty Administration within fourteen (14) days of being found defective. Parts may be repaired or replaced with new or reconditioned parts, at Seller's election. Warranty adjustment is contingent upon the Buyer complying with the Seller's Warranty Process as described in the Bell Helicopter VISTA Customer Portal and with the Seller's Warranty Administration disposition instructions for defective parts. Failure to properly comply with Seller's Warranty Process may, at Seller's sole option, void Seller's warranty as to the allegedly defective part.

RETURN SHIPMENT: Parts returned to Seller will be eligible for remedy under this warranty only if the part is carefully packed by the Buyer for the return shipment. Damage occurring to a part due to improper packaging may result in the denial of a warranty claim. In the event that Seller determines a returned part to be damaged or unsalvageable due to improper packaging, the Buyer will be billed repair or replacement cost incurred by Seller. The party initiating shipment bears the risk of loss or damage to parts in transit.

CORE RETURNS: Any core removed by Buyer for which Seller has furnished a replacement part through the Warranty Process shall be shipped by Buyer, with all historical service records, to a facility designated by Seller, within fourteen (14) days of receipt by Buyer of the replacement part. Buyer shall provide Seller with proof of shipment within fourteen (14) days following receipt of the replacement part. In the event that Buyer fails to provide Seller with such proof of shipment within the fourteen (14) days or fails to provide the applicable historical service records, Buyer shall be charged the invoiced value of the replacement part.

WARRANTY AND LIABILITY DISCLAIMERS AND EXCLUSIONS: THIS WARRANTY IS GIVEN AND ACCEPTED IN PLACE OF (i) ALL OTHER WARRANTIES OR CONDITIONS, EXPRESS OR IMPLIED, INCLUDING BUT NOT LIMITED TO THE IMPLIED WARRANTIES OR CONDITIONS OF MERCHANTABILITY OR FITNESS FOR A PARTICULAR PURPOSE AND (ii) ANY OBLIGATION, LIABILITY, RIGHT, CLAIM OR REMEDY IN CONTRACT OR IN TORT, INCLUDING PRODUCT LIABILITIES BASED UPON STRICT LIABILITY, NEGLIGENCE, OR IMPLIED WARRANTY IN LAW.

This warranty is the only warranty made by Seller. The Buyer's sole remedy for a breach of this warranty or any defect in a part is the repair or replacement of the helicopter part and reimbursement of reasonable freight charges. Seller excludes liability, whether as a result of a breach of contract or warranty, negligence or strict product liability, for incidental or consequential damages, including without limitation, damage to the helicopter or other property, costs and expenses resulting from required changes or modifications to helicopter components and assemblies, changes in retirement lives and overhaul periods, local customs fees and taxes, and costs or expenses for commercial losses or lost profits due to loss of use or grounding of helicopters or otherwise.

Seller makes no warranty and disclaims all liability in contract or in tort, including, without limitation, negligence and strict tort liability, with respect to work performed by third parties at Buyer's request and with respect to engines, engine accessories, batteries, radios, and avionics.

Seller makes no warranty and disclaims all liability with respect to components or parts damaged by, or worn due to, normal wear and tear, erosion or corrosion. Seller makes no warranty and disclaims all liability for consumables which are defined as items required for normal and routine maintenance or replaced at scheduled intervals shorter than the warranty period. "Consumables" include but are not limited to engine and hydraulic oil, oil filters, packings and o-rings, anti-corrosion and/or sealing compounds, brush plating material, nuts, bolts, washers, screws, fluids, compounds, and standard aircraft hardware that is readily available to aircraft operators from sources other than Seller.

This warranty shall not apply to any helicopter part which has been repaired or altered outside Seller's factory in any way so as, in Seller's sole judgment, to affect its stability, safety or reliability. This warranty shall not apply to any helicopter part which has been subject to misuse, negligence or accident, or which has been installed in any aircraft which has been destroyed. Repairs and alterations which use or incorporate parts and components other than genuine Bell parts or parts approved by Bell for direct acquisition from sources other than Bell itself are not warranted by Bell, and this warranty shall be void to the extent that such repairs and alterations,

in Seller's sole judgment, affect the stability, safety or reliability of the helicopter or any part thereof, or damage genuine Bell or Bell-approved parts. No person, corporation or organization, including Bell Authorized Customer Service Facilities, is authorized by Seller to assume for it any other liability in connection with the sale of its helicopters and parts.

NO STATEMENT, WHETHER WRITTEN OR ORAL, MADE BY ANY PERSON, CORPORATION OR ORGANIZATION, INCLUDING BELL AUTHORIZED CUSTOMER SERVICE FACILITIES, MAY BE TAKEN AS A WARRANTY NOR WILL IT BIND SELLER.

CHOICE OF LAW AND JURISDICTION: This warranty shall be interpreted under and governed by the laws of the State of Texas. All legal actions based upon claims or disputes pertaining to or involving this warranty including, but not limited to, Seller's denial of any claim or portion thereof under this warranty, must be filed in the courts of general jurisdiction of Tarrant County, Texas or in the United States District Court for the Northern District of Texas, Ft. Worth Division located in Ft. Worth, Tarrant County, Texas. In the event that Buyer files such an action in either of the court systems identified above, and a final judgment in Seller's favor is rendered by such court, then Buyer shall indemnify Seller for all costs, expenses and attorneys' fees incurred by Seller in defense of such claims. In the event Buyer files such a legal action in a court other than those specified, and Seller successfully obtains dismissal of that action or transfer thereof to the above described court systems, then Buyer shall indemnify Seller for all costs, expenses and attorneys' fees incurred by Seller in obtaining such dismissal or transfer.

BULLETIN RECORD

Unless otherwise specified, all applicable Alert Service Bulletins and Technical Bulletins issued prior to and including the bulletins listed below have been incorporated in this manual. Subsequent applicable bulletins will be incorporated in future revisions/reissues.

ALERT SERVICE BULLETINS

	ASB NUMBER	SUBJECT	DATE
1	206L-12-170	Vertical Fin Supports P/N 206-031-417-ALL and P/N 206-031-418-ALL, Inspection of	4 February 2013

1 All applicable bulletins issued prior to, and including 206L-12-170, have been incorporated.

TECHNICAL BULLETINS

	TB NUMBER	SUBJECT	DATE
1	206L-12-246	Fuel Transfer Pump and Centrifugal Boost Pump Canister, Upgrade of.	30 October 2012

1 The following Technical Bulletins have not been incorporated: 206L-12-244, 206L-12-242, 206L-11-240, 206L-09-239, 206L-09-234, 206L-07-227, 206L-07-225, 206L-07-223, 206L-02-207, 206L-00-203, 206L-96-189, 206L-96-187, 206L-95-182, 206L-95-180, and 206L-95-178.

Technical Bulletins issued prior to 1990 are currently being reviewed for incorporation and the BR page will be updated to reflect this information at a future revision.

TEMPORARY REVISION RECORD

This Temporary Revision Record provides a current listing of active Temporary Revisions against the manual. Temporary Revisions, which have been canceled/incorporated, will only be maintained on the record until the next revision is issued. If there are no Temporary Revisions shown on the record, this is confirmation that there are no Temporary Revisions issued against the manual.

temp. rev. no.	TITLE	DATE ISSUED	DATE CANCELED

NOTE: For tracking purposes, Temporary Revisions are now being numbered (Example: TR-1).

LIST OF CHAPTERS

Title	Chapter
Introduction	1
Airworthiness Limitations Schedule	4
Inspections	5
Dimensions and Charts	6
Lifting and Jacking	7
Leveling and Weight and Balance	8
Towing	9
Parking, Mooring and Storage	10
Placards and Markings	11
Servicing and Lubrication	12
Vibration Analysis	18
Air Conditioning	21
Equipment/Furnishing	25
Fire Protection	26
Flight Control System	27
Fuel System	28
Hydraulic System	29
Ice and Rain Protection	30
Landing Gear	32
Doors	52
Fuselage	53
Windows	56
Rotor System	65
Power Train System	66
Power Plant System	71
Engine Controls	76
Engine Oil	79

CHAPTER 1 — INTRODUCTION

TABLE OF CONTENTS

Paragraph Number	Title	Chapter/Section Number	Page Number
	INTRODUCTION		
1-1	Scope of Manual	1-00-00	3
1-2	Use of Manual	1-00-00	3
1-3	Customer Comments	1-00-00	3
1-4	Revision Status and List of Effective Pages	1-00-00	3
1-5	Table of Contents	1-00-00	3
1-6	Paragraph, Page, Figure, and Table Numbering	1-00-00	3
1-7	Bulletins	1-00-00	3
1-8	Temporary Revisions	1-00-00	4
1-9	Consumable Materials	1-00-00	4
1-10	Special Tools	1-00-00	4
1-11	Torques	1-00-00	4
1-12	Terminology	1-00-00	4
1-13	Warnings, Cautions, and Notes	1-00-00	4
1-14	Standard Practices	1-00-00	4
1-15	Replacement Parts and Assemblies	1-00-00	4
1-16	Wear Limits	1-00-00	5
1-17	Description of the Model 206L1 Helicopter	1-00-00	5

FIGURES

Figure Number	Title	Page Number
1-1	Model 206L1 Helicopter (Typical)	6

INTRODUCTION

1-1. SCOPE OF MANUAL

This Maintenance Manual (MM) (Volume 1, Aircraft General) includes all necessary data to provide helicopter operators with field maintenance procedures. Maintenance data on instruments, electrical avionics and wiring diagrams will be found in Volume 2. This manual should be used in conjunction with the BHT-206L-CR&O and BHT-206A/B/L-Series-CR&O.

The information in this manual is also applicable to 206L1 helicopters with Engine Upgrade kit 206-706-520 installed per BHT-206-SI-2050, and 206L1+ helicopters (Increased Gross Weight (IGW) kit 206-706-530 installed per BHT-206-SI-2052). Information that is specific to 206L1 helicopters with the Engine Upgrade kit or 206L1+ IGW Upgrade kit installed will be identified as “206L1 Engine Upgrade and 206L1+ IGW Upgrade” or equivalent statement, as applicable.

This MM is backed by other Bell Helicopter publications. These other publications are also used on other helicopter models. These other publications are: the Special Tools Illustrated Parts Breakdown (BHT-SPECTOOL-IPB), the Standard Practices Manual (BHT-ALL-SPM), the Electrical Standard Practices Manual (BHT-ELEC-SPM), the Structural Repair Manual (BHT-206-SRM), and the Corrosion Control Guide (CSSD-PSE-87-001).

The assignment of chapters and sections of this manual are in alignment with Air Transport Association Specification (ATA-100). An example of assignment is as follows:

Chapter 27	Flight controls
Section 10	Collective stick and jackshaft
Subject 00	This grouping is not assigned in this Maintenance Manual

1-2. USE OF MANUAL

The instructions that are given in this manual and those that have been changed by Alert Service Bulletins, issued by Bell Helicopter Textron, and by Airworthiness Directives, issued by the local Aviation Authority, shall be strictly followed.

1-3. CUSTOMER COMMENTS

Bell Helicopter Textron strives to give you, the customer, accurate and straightforward manuals. Sometimes, we may make mistakes. If you find any mistakes, we would appreciate it if you told us. Your observation, suggestion, or complaint will be acknowledged.

For your convenience, we include a Customer Feedback Form at the beginning of this manual. You can send it by fax, or mail it to us. When you tell us about a mistake that is found in the Maintenance Manual, please be as specific as possible. Your help to make sure that the manual is correct is very much appreciated.

1-4. REVISION STATUS AND LIST OF EFFECTIVE PAGES

The revision status of the manual is given in the log of revisions (page A) and on the title page of the manual. The log of pages gives the revision status of every page in the manual.

1-5. TABLE OF CONTENTS

To locate the required information, every chapter has a table of contents.

1-6. PARAGRAPH, PAGE, FIGURE, AND TABLE NUMBERING

Paragraphs, pages, figures, and tables start at the number 1 within a chapter.

1-7. BULLETINS

Technical Bulletins (TBs) and Alert Service Bulletins (ASBs) are published when they are necessary. These documents supplement the Maintenance Manual and give instructions and data to change components, systems, and carry out maintenance practices on the helicopter. When a bulletin affects the way the helicopter is maintained, it is incorporated in the manual at the next available opportunity.

1-8. TEMPORARY REVISIONS

Temporary revisions are published when necessary. Refer to the Temporary Revision Record (page TR) for a listing of active temporary revisions against this manual.

1-9. CONSUMABLE MATERIALS

NOTE

Handling, storage, and safety precautions concerning consumable materials shall be in accordance with the manufacturers instructions, unless otherwise specified in this manual.

The consumable materials, that are necessary for you to do maintenance tasks, are given by name and by item number in the text; for example, “drycleaning solvent (C-304)”. The number refers to the item 304. The data on this item 304 is found in Table 13-2 in Chapter 13 of the Standard Practices Manual (BHT-ALL-SPM).

On occasion, the materials that are used in maintenance tasks will change properties, change suppliers, or be discontinued. Also, new improved materials may become available. If there is ever a difference between the Maintenance Manual and Standard Practices Manual, the manual that has the latest date of issue shows the preferred material. However, either material my be used for the maintenance task unless it is stated otherwise in the procedure.

1-10. SPECIAL TOOLS

Some maintenance procedures required the use of special tools. These tools are given in a table at the beginning of the applicable maintenance paragraph. A description and illustration of these tools are found in the Special Tools Illustrated Parts Breakdown Manual (BHT-SPECTOOL-IPB).

1-11. TORQUES

Where applicable, special torques are specified within the text (or on illustrations) within this manual.

When a torque value is not shown, then the standard torque value for that combination of fasteners shall be used. Standard torque values for various combinations of fasteners are found in the Standard Practices Manual (BHT-ALL-SPM, Chapter 2).

1-12. TERMINOLOGY

1-13. WARNINGS, CAUTIONS, AND NOTES

WARNING

IF YOU DO NOT FOLLOW THE INSTRUCTIONS THAT ARE GIVEN IN A WARNING, PERSONAL INJURY CAN OCCUR.

CAUTION

IF YOU DO NOT FOLLOW THE INSTRUCTIONS THAT ARE GIVEN IN A CAUTION, YOU CAN CAUSE DAMAGE TO THE HELICOPTER OR TO THE COMPONENTS.

NOTE

A note includes supplemental data about the procedure, the practice, the condition, etc., for the maintenance task that you do.

Warnings, cautions, and notes are used throughout this manual to emphasize important and critical instructions.

1-14. STANDARD PRACTICES

Standard maintenance practices and procedures that are not given in this manual are found in the Standard Practices Manual (BHT-ALL-SPM) and the Electrical Standard Practices Manual (BHT-ELEC-SPM).

1-15. REPLACEMENT PARTS AND ASSEMBLIES

Replacement parts and assemblies that are necessary for the correct and proper maintenance of the helicopter and its components are given in the Illustrated Parts Breakdown Manual (BHT-206L-SERIES-IPB).

1-16. WEAR LIMITS

CAUTION

THE METRIC EQUIVALENTS TO U.S. STANDARD WEIGHTS AND MEASURES MAY BE PROVIDED IN THIS MANUAL. HOWEVER, USE ONLY THE U.S. STANDARD VALUES WHEN YOU TAKE A MEASUREMENT TO ESTABLISH A SPECIFIC DIMENSION OR TO FIND THE SERVICEABILITY OF A COMPONENT.

1. Throughout this manual, wear limits are given to show the required fit between the mating parts. It is not intended that all dimensions be examined as a prescribed maintenance procedure. However, you must examine the dimensions of parts that show signs of wear or physical damage.

2. Wear limits, fits, and tolerances are integrated into the inspection, repair, and assembly procedures.

1-17. DESCRIPTION OF THE MODEL 206L1 HELICOPTER

The fuselage assembly (Figure 1-1) consists of the forward fuselage, aft fuselage, and tailboom. The forward fuselage provides the cabin and fuel cell enclosure as well as pylon support.

The basic structure of the forward fuselage consists of a lower-curved honeycombed sandwich panel and an upper longitudinal aluminum beam. The core of the sandwich structure is aluminum alloy throughout, and is faced with aluminum alloy except in the fuel cell region, where Fiberglas is used. The rotor, transmission, and engine are supported by the upper longitudinal beam, which is connected to the lower structure by three fuselage bulkheads and a centerpost to form an integrated structure. The most forward and aft bulkheads act as carry-through structure for the landing gear crosstubes. The tailboom is a full monocoque structure with aluminum skin and aluminum substructure.

The helicopter is powered by a Rolls-Royce model 250-C28B (250-C30P, 206L1 Engine Upgrade and 206L1+ IGW Upgrade) turboshaft engine. It is an internal combustion gas turbine engine consisting of a single stage centrifugal-flow compressor, a single combustion chamber, a two-stage gas producer turbine, and a two-stage power turbine. Refer to Rolls-Royce Operation and Maintenance Manual 16W2 (14W2, 206L1 Engine Upgrade and 206L1+ IGW Upgrade).

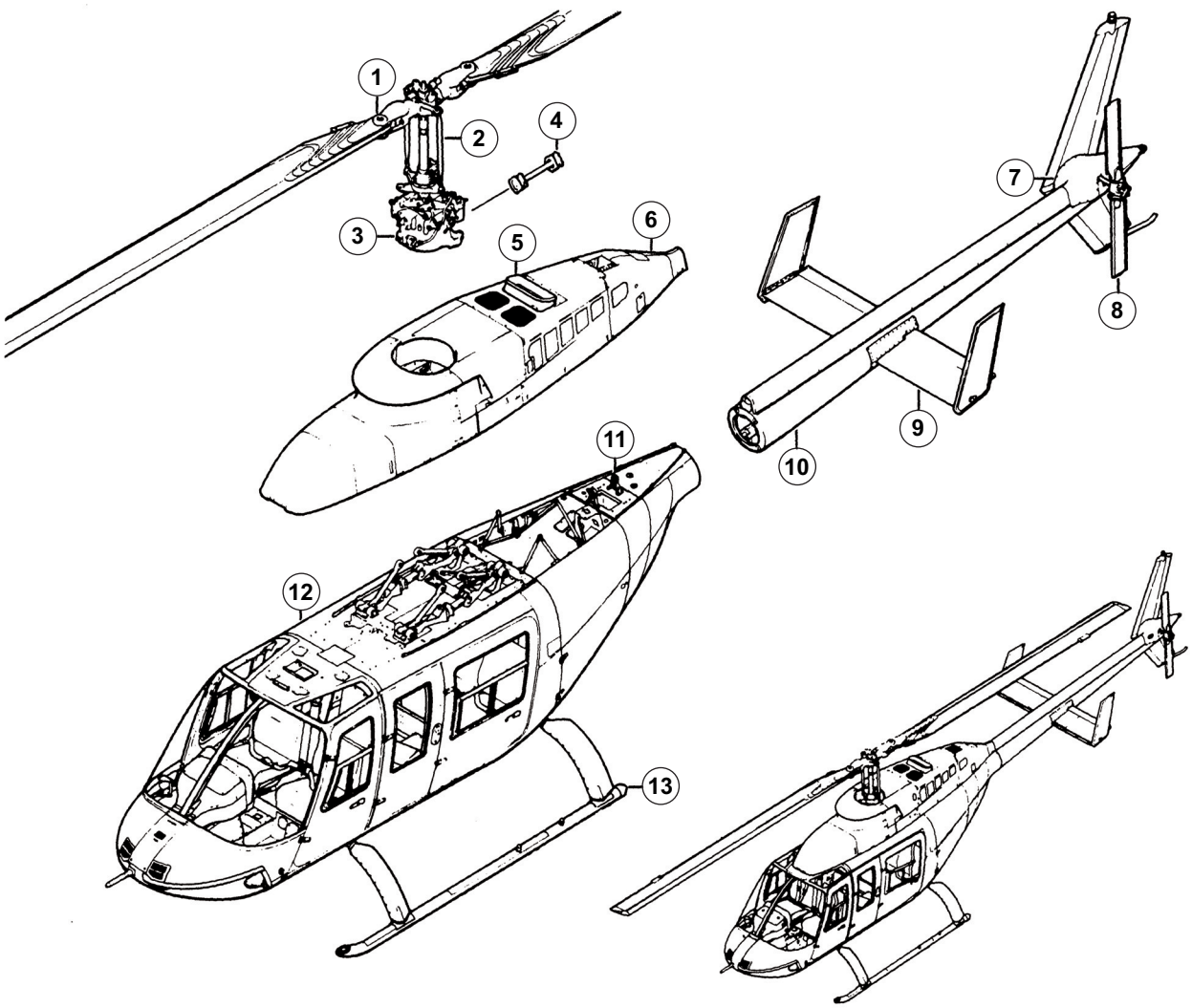

1. Main rotor hub and blade installation
2. Pylon installation
3. Transmission assembly
4. Main driveshaft installation
5. Engine assembly
6. Cowling installation
7. Tail rotor fairing installation
8. Tail rotor assembly
9. Horizontal stabilizer installation
10. Tailboom assembly
11. Tail rotor driveshaft installation
12. Fuselage structure assembly
13. Landing gear assembly

206L1_MM_01_0001

Figure 1-1. Model 206L1 Helicopter (Typical)

CHAPTER 4 — AIRWORTHINESS LIMITATIONS SCHEDULE

TABLE OF CONTENTS

Paragraph Number	Title	Chapter/Section Number	Page Number
	AIRWORTHINESS LIMITATIONS SCHEDULE		
4-1	Airworthiness Limitations Schedule	4-00-00	5

FIGURES

Figure Number	Title	Page Number
4-1	Tailboom Upper Left Attachment Fitting (206-032-409-001) — Recurring 110-Hour Inspection	14

TABLES

Table Number	Title	Page Number
4-1	Airworthiness Limitations Schedule	6
4-2	Inspection Limitations Schedule	13

The Airworthiness Limitations Schedule is approved by the Minister and specifies the maintenance required by any applicable airworthiness or operational rules unless an alternative program has been approved by the Minister.

Chief Engineering
Aircraft Certification
Transport Canada

REVISION NO.	DATE OF SIGNATURE	APPROVAL SIGNATURE
Original to Rev. 15	N/A	N/A
16	22 August 1995	
17	N/A	N/A
18	N/A	N/A
19	9 December 2002	
20	22 December 2003	
21	N/A	N/A
22	N/A	N/A
23	30 October 2007	

REVISION NO.	DATE OF SIGNATURE	APPROVAL SIGNATURE
24	14 December 2007	
25	20 August 2008	A/MARDD 20.08.08.
26	26 May 2009	26-05-2009
27	25 September 2009	25-SEP-2009
28	N/A	N/A
29	N/A	N/A
30	N/A	N/A
31	8 April 2011	8/APR./2011

REVISION NO.	DATE OF SIGNATURE	APPROVAL SIGNATURE
32	29 February 2012	29 FEB. 2012
33	1 June 2012	1 JUNE 2012
34	7 November 2012	7 NOV. 2012
35	N/A	N/A
36	N/A	N/A
37	N/A	N/A
38	N/A	N/A
39	25 JUNE 2019	Acting AA ADP 25 June 2019 ROOP DHAHIWAL
40	N/A	N/A
41	20 MARCH 2024	DocuSigned by: C5962CA6FFA74B6...
42	N/A	N/A
43	10 JULY 2026	Electronically Signed 2026-07-10 20:15:23 UTC - 198.103.96.11 Z. Teclemariam Nintex AssureSign® be7be842-7c66-4b66-a686-b483014dbea0

AIRWORTHINESS LIMITATIONS SCHEDULE

4-1. AIRWORTHINESS LIMITATIONS SCHEDULE

WARNING

ALL REPAIR AND OVERHAUL PROCEDURES PUBLISHED BY BELL HELICOPTER TEXTRON, INCLUDING COMPONENT RETIREMENT LIFE, ARE BASED SOLELY ON THE USE OF BELL APPROVED PARTS AND PROCESSES. IF PARTS OR PROCESSES DEVELOPED OR APPROVED BY PARTIES OTHER THAN BELL HELICOPTER ARE USED, THEN THE DATA PUBLISHED OR OTHERWISE SUPPLIED BY BELL HELICOPTER ARE NOT APPLICABLE. THE USER IS WARNED TO NOT RELY ON BELL HELICOPTER DATA FOR PARTS AND PROCESSES NOT APPROVED BY BELL HELICOPTER. ALL APPLICABLE INSPECTIONS AND REPAIR METHODS MUST BE OBTAINED FROM THE SUPPLIER OF THE PARTS OR PROCESSES NOT APPROVED BY BELL HELICOPTER. BELL HELICOPTER IS NOT RESPONSIBLE FOR PARTS OR PROCESSES OTHER THAN THOSE WHICH IT HAS ITSELF DEVELOPED OR APPROVED.

WARNING

CONTINUED USE OF ANY TIME/CALENDAR/RIN LIFE LIMITED COMPONENT PAST ITS STATED LIMITS IS NOT PERMITTED AS IT COULD SERIOUSLY AFFECT THE AIRWORTHINESS OF THE HELICOPTER. THE COMPONENT MUST BE REMOVED FROM THE HELICOPTER NOT LATER THAN THE END OF THE LIFE LIMIT. IT MUST EITHER BE MADE UNSERVICEABLE OR MARKED IN A CONSPICUOUS MANNER TO PREVENT CONTINUED USE, EVEN INADVERTENT USE.

WHEN A REPLACEMENT PART IS INSTALLED, THE PART NAME, PART NUMBER, SERIAL NUMBER, AND CURRENT OPERATING HOURS, IF APPLICABLE, MUST BE RECORDED IN THE HISTORICAL SERVICE RECORD FOR THE ASSEMBLY OR HELICOPTER.

NOTE

The requirements stated in Chapter 5 are to be complied with and the appropriate maintenance actions are to be performed.

NOTE

The airworthiness life or inspection interval for any part number contained in this schedule applies to all the successive dash numbers for that component unless it is otherwise specified.

The mandatory Airworthiness Limitations Schedule (Table 4-1) summarizes the mandatory maximum life, in hours, years or by Retirement Index Number (RIN) of components with a limited airworthiness life. Parts that are not on the schedule have an unlimited airworthiness life. The Inspection Limitations Schedule (Table 4-2) summarizes the mandatory inspection interval in hours.

Refer to the engine manufacturer's publications for the airworthiness limitations of the power plant components.

WARNING

SOME PARTS ARE INSTALLED AS ORIGINAL EQUIPMENT ON BOTH MILITARY AND COMMERCIAL HELICOPTERS AND MAY HAVE A LOWER AIRWORTHINESS LIFE AND/OR OVERHAUL SCHEDULE WHEN USED ON A MILITARY HELICOPTER. IN ADDITION, CIRCUMSTANCES SURROUNDING THEIR USE MAY CALL FOR OPERATION OF THE MILITARY HELICOPTER OUTSIDE OF THE APPROVED COMMERCIAL FLIGHT ENVELOPE. CONSEQUENTLY, PARTS THAT HAVE BEEN USED ON MILITARY HELICOPTERS SHOULD NOT BE USED ON COMMERCIAL HELICOPTERS.

CAUTION

AIRWORTHINESS LIFE OF SOME KIT COMPONENTS IS NOT COVERED IN THIS SCHEDULE. REFER TO APPLICABLE SERVICE INSTRUCTION (SI) OR MAINTENANCE MANUAL SUPPLEMENT (MMS) FOR KIT COMPONENT SCHEDULES.

NOTE

The retirement life given, or the failure to give a retirement life to a component, does not constitute a warranty of any kind. The only warranty applicable to the helicopter or any component is the warranty included in the Purchase Agreement for the helicopter or the component.

The airworthiness retirement lives given to the components and assemblies are determined by experience, tests, and the judgment of Bell Helicopter engineers. The retirement lives cannot be changed without the approval of the Minister of Transport Canada.

Prior to disposing of unsalvageable helicopter parts and materials, caution should be exercised to ensure that the parts and material are disposed of in a manner that does not allow them to be returned for service. Refer to FAA Advisory Circular 21-38 for guidance on the disposal of unsalvageable aircraft parts and materials.

Table 4-1. Airworthiness Limitations Schedule

COMPONENT	PART NUMBER △1	AIRWORTHINESS LIFE
MAIN ROTOR HUB AND BLADES		
Main Rotor Yoke	206-011-101-001/-005	△4
Main Rotor Trunnion	206-011-120-001	△6
Main Rotor Trunnion	206-011-120-103/-105	△21 △22 24,000 RIN
Latch Bolt	206-011-122-001/-003	△3
Strap Retention Fitting	206-011-124-001	2400 hours
Strap Retention Pin	206-011-125-001	1200 hours
Main Rotor Grip	206-011-132-009/-113	△8 4800 hours
Tension Torsion Strap	206-011-147-007	△11 △12 1200 hours/24 months
Strap Retention Fitting	206-011-150-101/-105	2400 hours

Table 4-1. Airworthiness Limitations Schedule (Cont)

COMPONENT	PART NUMBER 1	AIRWORTHINESS LIFE
MAIN ROTOR HUB AND BLADES (CONT)		
Tension Torsion Strap	206-011-154-103/-107	11 1200 hours/24 months
Latch Bolt	206-011-260-101	17 1200 hours
Main Rotor Blade	206-015-001-001/-103/-105/ -107/-109/-111/-113/-115/-117/ -119/-121	13 31 40 4000 hours
Main Rotor Blade	206-015-001-125/-127/-129/-131	31 2300 hours
Tension Torsion Strap	206-310-004-103	41 1200 hours/48 months
SWASHPLATE AND SUPPORT		
Lower Cyclic Tube	206-001-193-001	4800 hours
Collective Idler Link	206-010-407-001	4800 hours
Swashplate Support Assembly	206-010-445-113	14,400 hours
Collective Idler Link	206-010-446-105	24 39 1200 hours
Collective Idler Link	206-010-446-107	14,400 hours
Collective Lever	206-010-447-105	25 39 1200 hours
Collective Lever	206-010-447-109	14,400 hours
Swashplate Support Assembly	206-010-452-001/-005/-109	26 4800 hours
Swashplate Support Assembly	206-010-452-113	Unlimited
Collective Sleeve Assembly	206-010-454-005	4800 hours
Collective Sleeve Assembly	206-010-454-107/-109/-113	14,400 hours
Collective Lever	206-010-467-001/-105	4800 hours
POWER TRAIN		
Tail Rotor Gearbox Duplex Bearing	206-040-410-003/-005/-101	3000 hours
Main Rotor Mast	206-040-535-005	21 23 1800 hours/44,000 RIN
Main Rotor Mast	206-040-535-101/-105	9 21 23 5500 hours/44,000 RIN
Main Rotor Mast	206-040-535-109	21 23 5500 hours/44,000 RIN
Sun Gear	206-040-662-101	14
Freewheel Assembly Clutch	CL41742-1	3000 hours

Table 4-1. Airworthiness Limitations Schedule (Cont)

COMPONENT	PART NUMBER 1	AIRWORTHINESS LIFE
POWER TRAIN (CONT)		
Freewheel Assembly Clutch	CL42250-1	3000 hours
TAIL ROTOR HUB AND BLADES		
Tail Rotor Yoke	206-011-811-009	4800 hours
Tail Rotor Yoke	206-011-819-101/-105/-109	10 5000 hours
Tail Rotor Blade	206-016-201-001/-107/-113	15 32 2400 hours
Tail Rotor Blade	206-016-201-127/-131/-135	15 16 30 32 2500 hours
AIRFRAME		
Horizontal Stabilizer	206-023-119-167	37
MISCELLANEOUS KITS		
Fixed Floats Landing Gear Aft Crosstube	206-050-169-011/-013	19
Fixed Floats Landing Gear Forward Crosstube	206-050-169-031	19
High Landing Gear Crosstube	206-053-109-ALL	18
Standard Landing Gear Crosstube	206-053-119-ALL	18
Pan-type Floats Landing Gear Crosstube	206-053-129-009/-011/-101/-103	20
Fixed Floats Landing Gear Aft Crosstube	206-053-211-103	27
Emergency Floats Reservoir	1269556-3/-4	28 15 years
Emergency Floats Reservoir	1271226	29 15 years
Emergency Floats Reservoir	206-073-916-003	36 10 years
Emergency Floats Reservoir	206-073-928-101	36 10 years
Emergency Floats Squib	94455	33
Emergency Floats Squib	29022968	34
Hoist Cable Cutter Assembly	Y-1265-11-1	35

Table 4-1. Airworthiness Limitations Schedule (Cont)

COMPONENT	PART NUMBER (1)	AIRWORTHINESS LIFE
	POWER PLANT	
Turboshaft Engine	250-C28	Refer to Rolls Royce 250-C28 Operation and Maintenance Manual, 16W2
Turboshaft Engine	250-C30P	(38) Refer to Rolls Royce 250-C30P Operation and Maintenance Manual, 14W2

NOTES:

(1) Airworthiness limitation for part number listed applies to all successive dash numbers for that component unless otherwise specified.

(2) Reserved.

(3) Main rotor latch bolts 206-011-122-001/-003 will have been removed from service no later than 1 September 1978. Refer to ASB 206L-78-2, dated 21 July 1978.

(4) Main rotor yokes 206-011-101-109 and 206-011-149-101/-105 are not listed and are conditional. Main rotor yokes 206-011-101-001/-005 will have been removed from service no later than 1 September 1981. Refer to ASB 206L-79-5, dated 3 April 1979 and ASB 206L-80-11, dated 1 May 1980.

(5) Reserved.

(6) Main rotor trunnion 206-011-120-001 will have been removed from service no later than 1 September 1981. Refer to ASB 206L-80-9 Rev. C, dated 10 August 2001.

(7) Reserved.

(8) Selected serial numbers of main rotor grip 206-011-132-009 will have been removed from service upon reaching 1200 hours in service. Refer to ASB 206L-80-15, dated 29 July 1980 for list of serial numbers affected.

(9) Selected serial numbers of main rotor mast 206-040-535-105 will have been returned to Bell Helicopter Textron (BHT) for metallurgical evaluation no later than 31 May 1987. Affected masts inspected at BHT and found to be acceptable have the suffix “U” added to the serial number. Refer to ASB 206L-87-44, dated 23 April 1987 for list of serial numbers affected.

(10) Selected serial numbers of tail rotor yoke 206-011-819-101 will have been returned to Bell Helicopter Textron (BHT) for inspection and rework no later than 1 April 1988. Refer to ASB 206L-88-51, dated 23 April 1987 for list of serial numbers affected.

(11) Main rotor hub tension torsion straps 206-011-147 and 206-011-154 have airworthiness lives of 1200 hours or 24 months, whichever occurs first. The calendar life of 24 months starts when new straps are installed in a main rotor hub and blade assembly, and are subjected to rotation on the helicopter. Refer to ASB 206L-80-12, dated 2 June 1980.

(12) Selected serial numbers of tension torsion strap 206-011-147-007 must be removed from service. Refer to ASB 206L-89-60, dated 29 August 1989 for list of serial numbers affected.

Table 4-1. Airworthiness Limitations Schedule (Cont)

NOTES (CONT):

13 Selected serial numbers of main rotor blades 206-015-001-001/-103/-105 must be removed from service. Refer to ASB 206L-89-64 Rev. A, dated 29 November 1989 for list of serial numbers affected

14 Selected serial numbers of sun gear 206-040-662-101 must be removed from service. Refer to ASB 206L-90-69 Rev. A, dated 15 January 1991 for list of serial numbers affected.

15 Selected serial numbers of tail rotor blades 206-016-201-113/-127 must be removed from service. Refer to ASB 206L-90-70, dated 27 June 1990 for list of serial numbers affected.

16 Selected serial numbers of tail rotor blade 206-016-201-127 will have been returned to Bell Helicopter Textron (BHT) for evaluation no later than 30 September 1990. Affected blades inspected at BHT and found to be acceptable have the suffix “M” added to the serial number. Refer to ASB 206L-90-71 Rev. A, dated 31 October 1990 for list of serial numbers affected.

17 Selected serial numbers of main rotor latch bolt 206-011-260-101 must be removed from service. Refer to ASB 206L-92-86, dated 3 December 1992 for list of serial numbers affected.

18 Landing gear crosstubes 206-053-109-ALL and 206-053-119-ALL (all dash numbers) will have been removed from service no later than 30 September 1994. Refer to ASB 206L-94-93, dated 11 April 1994.

19 Landing gear crosstubes 206-050-169-011/-031 will have been removed from service no later than 31 January 1995. Refer to ASB 206L-94-97, dated 17 August 1994.

20 Landing gear crosstubes 206-053-129-009/-011/-101/-103 will have been removed from service no later than 28 February 1995. Refer to ASB 206L-94-98, dated 29 August 1994.

21 Each component with a retirement life sensitive to torque events will be assigned a maximum Retirement Index Number (RIN). This RIN corresponds to maximum allowed fatigue damage resulting from lifts and takeoffs. A torque event is defined as a takeoff (one takeoff plus subsequent landing = one RIN) or a lift (internal or external). For example, if an operator performs six takeoffs and 10 slingloads, this would total 16 torque events; (6 takeoffs = 6 events, 10 slingloads = 10 events, 6 + 10 = 16 torque events total).

Pilots are to record total number of torque events for each flight. This allows maintenance personnel to convert torque events to RIN by applying the appropriate RIN adjustment factor. Refer to ASB 206L-94-99 Rev. B, dated 10 August 2001. A new component will begin with an accumulated RIN of zero, that will be increased as lifts and takeoffs are performed. Operator will record number of lifts and takeoffs (torque events), and increase accumulated RIN accordingly. When maximum RIN is reached or retirement flight hours, whichever occurs first, component will be removed from service.

22 The retirement life of trunnion 206-011-120-103/-105 is based solely on RIN. Retire trunnion when RIN = 24,000. For each takeoff/lift, add one RIN if the trunnion is installed on 206L, 206L1, or 206L3 (includes 206L3 with Increased Power Operation kit installed per BHT-206-SI-2039) and two RIN if the trunnion is installed on a 206L4 (also applicable to 206L1+ helicopters (Increased Gross Weight Upgrade Kit 206-706-530 installed per BHT-206-SI-2052)). Refer to ASB 206L-94-99 Rev. B, dated 10 August 2001.

23 Retire main rotor masts 206-040-535-001/-005/-101/-105/-109 when RIN = 44,000. For each takeoff/lift, add one RIN if the mast is installed on 206L, 206L1, or 206L3 (includes 206L3 with Increased Power Operation kit installed per BHT-206-SI-2039) and two RIN if the mast is installed on a 206L4 (also applicable to 206L1+ helicopters (Increased Gross Weight Upgrade Kit 206-706-530 installed per BHT-206-SI-2052)). Refer to ASB 206L-94-99 Rev. B, dated 10 August 2001.

Table 4-1. Airworthiness Limitations Schedule (Cont)

NOTES (CONT):

24 Collective idler link 206-010-446-105, serial numbers A-1 through A-27, inclusively, and serial numbers RE-238 through and including RE-270 will be retired from service at 1200 hours service time. Refer to ASB 206-98-110, dated 6 May 1998.

25 Collective lever 206-010-447-105, serial numbers A-1 through A-22, inclusively, will be retired from service at 1200 hours service time. Refer to ASB 206L-98-110, dated 6 May 1998.

26 Swashplate support assemblies 206-010-452-005/-109 must be inspected every 50 hours after the swashplate support has accumulated 1500 hours in service. Refer to ASB 206L-93-89 Rev. B, dated 4 April 1994.

27 Landing gear aft crosstube 206-053-211-103 has an airworthiness life of 33,000 landings. Refer to ASB 206L-94-97, dated 17 August 1994.

28 Reservoir per DOT-3HT specification and Exemption Letter DOT-E-7218. Life starts from date of manufacture.

29 Reservoir per DOT-3HT specification and Exemption Letter DOT-E-8162. Life starts from date of manufacture.

30 Tail rotor blades 206-016-201-127 and subsequent, retirement life increased to 2500 hours. Refer to TB 206L-89-147, dated 2 June 1989.

31 Main rotor blades 206-015-001-ALL (all dash numbers). It is permissible to use any main rotor blade (mix and match) on 206L, 206L1, 206L3, and 206L4 provided that all conditions are met. Refer to TB 206L-87-142, dated 1 October 1987, and IL 206L-00-68 Rev. A or subsequent.

32 Tail rotor blades 206-016-201-ALL (all dash numbers). It is permissible to use any tail rotor blade on 206L, 206L1, 206L3, and 206L4 provided that all conditions are met. Refer to TB 206L-94-167 Rev. A, dated 1 May 1995.

33 Part of squib assembly 30908. Retire squib no later than 15 years after date of manufacturing. Dispose of time expired squib in accordance with local regulations.

34 Part of squib assembly 29022971 and approved alternate for squib 30908. Retire squib no later than 15 years after date of manufacturing. Dispose of time expired squib in accordance with local regulations.

35 Storage life of cutter assembly Y-1265-11-1, in original sealed container, is set at 60 months. Service life is 36 months from the time the cutter assembly is removed from the original sealed container. The 36-month service life must be contained within the 60-month storage life. Dispose of time expired squib in accordance with local regulations.

Example 1 – Cutter assembly stored for 24 months: 60 - 24 = 36-month service life.
Example 2 – Cutter assembly stored for 48 months: 60 - 48 = 12-month service life.
Example 3 – Cutter assembly stored for 1 month: 60 - 1 = 59 months, reduced to 36 months maximum service life.

36 Reservoir per FAA specification. Life starts from date of manufacture.

37 Affected horizontal stabilizer 206-023-119-167 must be removed from service no later than 30 September 2008. Refer to ASB 206L-06-141 for list of horizontal stabilizer serial numbers affected. Applicable horizontal stabilizers must be inspected every 600 hours or annually until replaced. Refer to ASB 206L-06-141 for inspection details.

Table 4-1. Airworthiness Limitations Schedule (Cont)

NOTES (CONT):

38 Applicable to Rolls Royce 250-C30P engine when installed in accordance with Engine Upgrade Kit 206-706-520 installed per BHT-206-SI-2050. Also applicable to 206L1+ helicopters (Increased Gross Weight Upgrade Kit 206-706-530 installed per BHT-206-SI-2052).

39 Applicable to 206L1+ helicopters (Increased Gross Weight Upgrade Kit 206-706-530 installed per BHT-206-SI-2052).

40 The airworthiness life of 4000 hours is only applicable to main rotor blades not affected by ASB 206L-09-159 Rev. A, dated 13 November 2009, or subsequent. Refer to TCCA AD CF-2011-44 R1, dated 1 February 2012, or subsequent for life applicable to blades affected by ASB 206L-09-159.

41 Main rotor hub tension torsion straps 206-310-004 have an airworthiness life of 1200 hours or 48 months, whichever occurs first. The calendar life of 48 months starts when new straps are installed in a main rotor hub and blade assembly, and are subjected to rotation on the helicopter.

Table 4-2. Inspection Limitations Schedule

COMPONENT	PART NUMBER (1)	INSPECTION INTERVAL (HOURS OPERATION TIME)
Tailboom Upper Left Attachment Fitting	206-032-409-001	(2) 110 hours

NOTES:

(1) Inspection limitation for the part number listed applies to all successive dash numbers for that component unless otherwise specified.

(2) You must do an inspection of the tailboom upper left attachment fitting 206-032-409-001 every 110 flight hours. Refer to ASB 206L-09-158 for a listing of affected tailbooms. Refer to Figure 4-1 for inspection details.

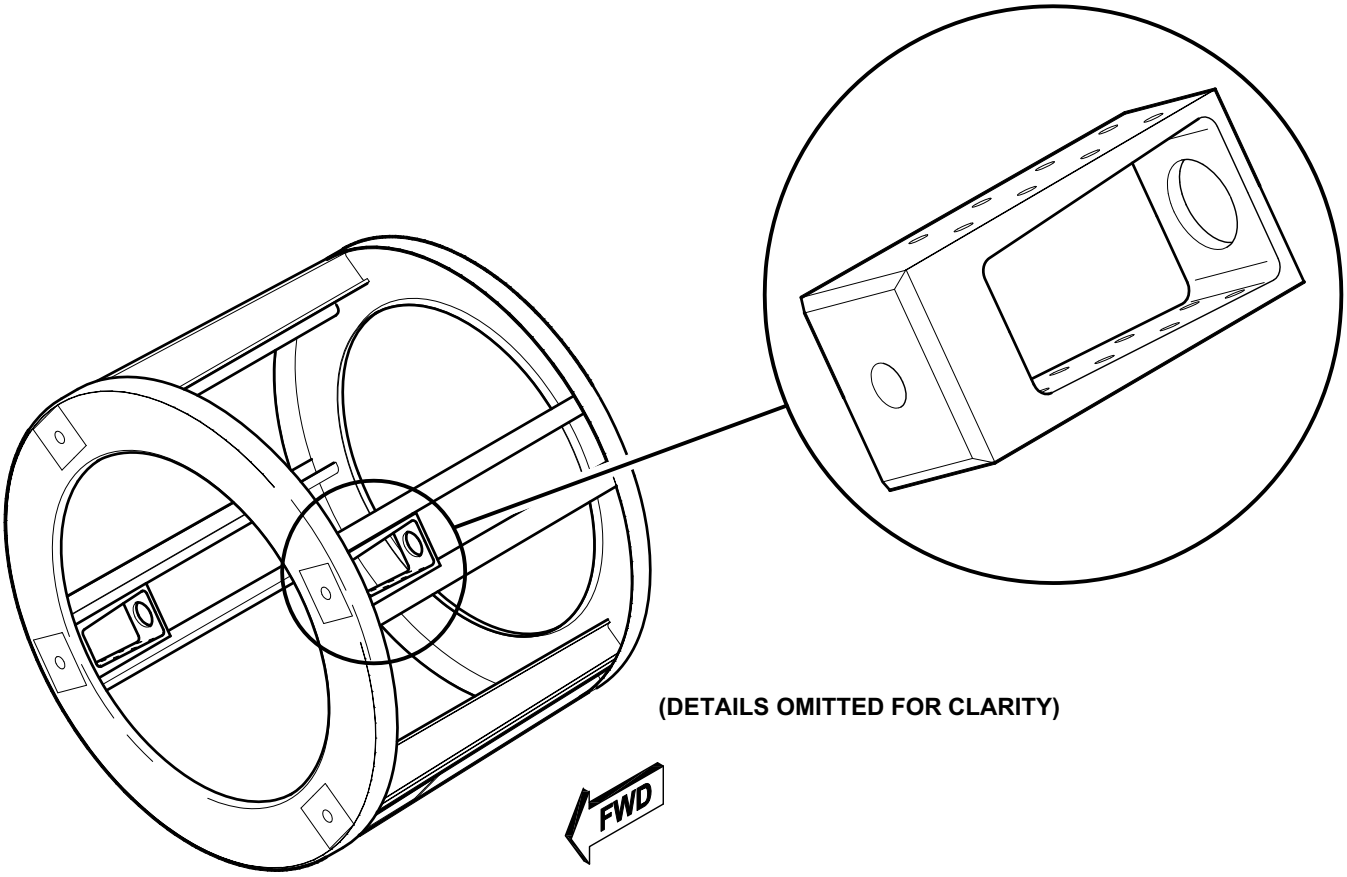

INSPECTION PROCEDURE:

1. Inspect upper left attachment fitting for cracks, mechanical damage, corrosion damage, loose rivets, and general condition.
2. Refer to ASB 206L-09-158 for wear, damage, and repair limits.
3. Repair fitting in accordance with ASB 206L-09-158.
4. Replace cracked or damaged fitting or loose rivets in accordance with ASB 206L-09-158.
5. If a crack is found, contact Product Support Engineering .

206LS_MM_04_0001+_c01

Figure 4-1. Tailboom Upper Left Attachment Fitting (206-032-409-001) — Recurring 110-Hour Inspection

CHAPTER 5 — INSPECTIONS AND COMPONENT OVERHAUL SCHEDULE

TABLE OF CONTENTS

Paragraph Number	Title	Chapter/Section Number	Page Number
	INSPECTIONS AND COMPONENT OVERHAUL SCHEDULE		
5-1	General	5-00-00	3
5-2	Items Not Covered and Inspection Responsibility	5-00-00	3
5-3	Crash Damage	5-00-00	4
5-4	Types of Inspections	5-00-00	4
5-5	Definitions	5-00-00	5
5-6	Inspection and Overhaul Tolerance	5-00-00	6
	SCHEDULED INSPECTIONS		
5-7	Scheduled Inspections	5-00-00	7
5-8	Airframe Inspection Program	5-00-00	7
5-9	Airframe Progressive Inspection Programs	5-00-00	7
5-10	100-Hour Airframe Progressive Inspection Program	5-00-00	7
5-11	300-Hour Airframe Progressive Inspection Program	5-00-00	8
5-12	Airframe Periodic Inspection Program	5-00-00	9
5-13	100-Hour Airframe Periodic Inspection Program	5-00-00	9
5-14	300-Hour Airframe Periodic Inspection Program	5-00-00	9
5-15	Changing Inspection Program	5-00-00	10
5-16	100-Hour Airframe Progressive Inspection — Event No. 1	5-00-00	17
5-17	100-Hour Airframe Progressive Inspection — Event No. 2	5-00-00	27
5-18	100-Hour Airframe Progressive Inspection — Event No. 3	5-00-00	33
5-19	100-Hour Airframe Progressive Inspection — Event No. 4	5-00-00	39
5-20	100-Hour Airframe Periodic Inspection	5-00-00	49
5-21	300-Hour Airframe Progressive Inspection — Event No. 1	5-00-00	51
5-22	300-Hour Airframe Progressive Inspection — Event No. 2	5-00-00	57
5-23	300-Hour Airframe Progressive Inspection — Event No. 3	5-00-00	65
5-24	300-Hour Airframe Progressive Inspection — Event No. 4	5-00-00	73
5-25	300-Hour Airframe Progressive Inspection — Event No. 5	5-00-00	81
5-26	300-Hour Airframe Progressive Inspection — Event No. 6	5-00-00	89
5-27	300-Hour Airframe Periodic Inspection	5-00-00	93
5-28	100-Hour Inspection	5-00-00	95
5-29	300-Hour Inspection	5-00-00	99
5-30	1000-Hour Inspection	5-00-00	107
5-31	1200-Hour Inspection	5-00-00	109
5-32	As Required by Manufacturer	5-00-00	115
5-33	Weekly Inspection	5-00-00	117
5-34	12-Month Inspection	5-00-00	119
5-35	12 Months of Component Operation	5-00-00	121
5-36	24-Month Inspection	5-00-00	123
5-37	60-Month Inspection	5-00-00	127
5-38	300-Hour or 12-Month Inspection	5-00-00	129
5-39	600 Hours or 12 Months of Component Operation	5-00-00	131
5-40	1200 Hours of Component Operation	5-00-00	133
5-41	1500 Hours of Component Operation	5-00-00	135

TABLE OF CONTENTS (CONT)

Paragraph Number	Title	Chapter/Section Number	Page Number
5-42	1500 Hours of Component Operation and Every 50 Hours Thereafter	5-00-00	137
5-43	2250 Hours or 60 Months of Component Operation	5-00-00	139
5-44	3000 Hours of Component Operation	5-00-00	141
	SPECIAL INSPECTIONS		
5-45	Special Inspections	5-00-00	143
5-46	After Fuel System Maintenance and/or Component Change	5-00-00	145
5-47	1 to 5 Hours After Each Installation	5-00-00	149
5-48	3 to 8 Hours After Each Installation	5-00-00	151
5-49	10 to 25 Hours After Each Installation	5-00-00	153
5-50	100 Hours After Each Installation	5-00-00	155
5-50A	Freewheel Lubrication System	5-00-00	156A
	CONDITIONAL INSPECTIONS		
5-51	Conditional Inspections	5-00-00	157
5-52	Hard Landing	5-00-00	159
5-53	Sudden Stoppage/Acceleration	5-00-00	165
5-54	Overspeed Main Rotor — 114% or Greater	5-00-00	173
5-55	Overtorque	5-00-00	177
5-56	Engine Compressor Stall or Surge	5-00-00	183
5-57	Lightning Strike	5-00-00	191
5-58	Engine Overtemp	5-00-00	197
5-59	Strike Impact to Auxiliary Finlets by Main Rotor Blades	5-00-00	199
	COMPONENT OVERHAUL SCHEDULE		
5-60	Component Overhaul Schedule	5-00-00	203

FIGURES

Figure Number	Title	Page Number
5-1	Maintenance Zones	15
5-2	Flight Control System Bolts	125

TABLES

Table Number	Title	Page Number
5-1	100-Hour Airframe Progressive Inspection Events	7
5-2	300-Hour Airframe Progressive Inspection Events	8
5-3	300-Hour Airframe Progressive or 300-Hour Airframe Periodic Inspection Program Prerequisites	11
5-4	Component Overhaul Schedule	203

INSPECTIONS AND COMPONENT OVERHAUL SCHEDULE

5-1. GENERAL

This chapter contains the time limit intervals and the requirements for the Scheduled Inspection, Special Inspection, Conditional Inspection, and for the Component Overhaul Schedule.

WARNING

FAILURE TO CORRECT CONDITIONS SUCH AS, BUT NOT LIMITED TO, CORROSION, EROSION, MECHANICAL DAMAGE, OR OBVIOUS WEAR FOUND DURING A SCHEDULED INSPECTION COULD SERIOUSLY AFFECT THE AIRWORTHINESS OF THE HELICOPTER.

The inspection intervals given in this chapter are the maximum permitted. Do not exceed these intervals. The owner/operator is responsible for increasing the scope and the frequency of the inspections as necessary. Make sure the helicopter is maintained safely during all unusual local changes, such as environmental conditions, helicopter use, etc. You can request changes to the requirements in this chapter through the local Aviation Authority.

The inspection intervals and the component overhaul schedule provided in this chapter are applicable only to Bell Helicopter Textron approved parts.

NOTE

The time period given for the overhaul of a component (or the failure to give a time period for the overhaul of a component) does not constitute a warranty of any kind. The only warranty applicable to the helicopter or any component is the warranty included in the Purchase Agreement for the helicopter or the component.

The Time Between Overhaul (TBO) and the inspection periods are determined through experience, tests, Lead The Fleet (LTF), or any other special programs and the judgement of Bell Helicopter Textron engineers. They are subject to change only by Bell Helicopter Textron or an approved Airworthiness Authority.

Changes to the TBO will be introduced by either revision to the Maintenance Manual, Chapter 5 or a Technical Bulletin.

Every calendar and hourly inspection is a thorough visual inspection to determine the airworthiness of the helicopter and the components. Qualified persons must do the inspections in accordance with quality standard aircraft practices and the applicable maintenance manuals. Bell Helicopter Textron considers that it is mandatory to obey all the applicable Alert Service Bulletins (ASB) and the Airworthiness Directives (AD).

Component operating time records are necessary for components that have scheduled maintenance procedures, which are different from those of the airframe. It is the owner/operator's responsibility to keep the Historical Service Records for the applicable component and to do the necessary maintenance procedures.

Before each inspection, remove or open the necessary cowlings, fairing, inspection doors, and panels.

5-2. ITEMS NOT COVERED AND INSPECTION RESPONSIBILITY

This manual does not include the specific inspection intervals for some components such as the compass calibration and the pitot static test. These specific inspection intervals are given by your government regulatory authority. Refer to their requirements for these specific inspections.

The owner/operator of the helicopter is responsible for the maintenance done on the helicopter and for ensuring that the specific time interval of any inspection procedure is not exceeded. It is the owner/operator's responsibility to:

1. Establish, maintain, and review the log books for discrepancies.

2. Make sure the Alert Service Bulletins (ASB), the Airworthiness Directives (AD), and the special

inspections are done when they are required to be done.

3. Make sure the scheduled inspections, the special inspections, and the required inspections for all of the installed kits are complied with.

4. Make sure all parts and components for which Historical Service Records are required have documented traceability to their original installation in the helicopter.

5. Make sure all limited life parts that have completed their published operating limits are replaced.

6. Make sure all of the components that have completed their published overhaul periods are overhauled.

7. Make sure all of the maintenance that is done on the helicopter is done by an approved maintenance organization.

The maintenance organization/person doing the maintenance is responsible for the quality of the maintenance done.

The owner/operator may choose to ask the maintenance organization/person doing the maintenance to perform the tasks listed by prior arrangement through a separate formal agreement.

5-3. CRASH DAMAGE

Because of the many possible combinations that can result from crash damage, it is not possible to include the specific repair tasks in this category. The helicopter mechanic must make an analysis of the crash damage for each situation. Do the repair in accordance with the degree of damage to the specific part and the applicable repair procedures in this manual. Call Bell Helicopter Textron Product Support Engineering with your analysis of the crash damage.

5-4. TYPES OF INSPECTIONS

1. The maintenance procedures may include scheduled inspections, special inspections, conditional inspections, component interim inspections, and component overhaul inspections.

a. Scheduled inspections must occur at specified operating intervals. The intervals may be in operating time (hours), cycles, torque events (RIN), calendar (days, months, years) or other assigned units. This makes sure that the helicopter is airworthy.

b. Special inspections are of a temporary nature or of a special interval that is not consistent with the scheduled inspections.

c. Conditional inspections do not occur at a specified time. A conditional inspection is the result of a known or suspected unusual event, known or suspected malfunctions, or defects.

d. An interim inspection occurs between overhauls.

e. The component overhaul schedule gives the elapsed operating time at which a component must be removed, disassembled, examined for condition, and overhauled, in accordance with data approved by Bell Helicopter Textron.

2. Lubrication and servicing requirements are in addition to those stated in this chapter (Chapter 12).

3. For corrosion control, refer to the Corrosion Control Guide, CSSD-PSE-87-001 and the BHT-ALL-SPM.

4. For engine schedule, special or conditional inspections, and component overhaul schedule, refer to the Rolls-Royce 250-C28 Series Operation and Maintenance Manual (16W2) (250-C30 Series Operation and Maintenance Manual (14W2) for 206L1 Engine Upgrade and 206L1+ IGW Upgrade).

5. For the common Bell Helicopter Textron approved optional equipment that is integrated into this Maintenance Manual, refer to this chapter for the scheduled inspection, conditional inspection, component interim inspection, and component overhaul inspection.

6. For all other Bell Helicopter Textron approved equipment, refer to the applicable information in this Maintenance Manual or the specific Service Instruction (SI) for the scheduled inspection, special inspection, conditional inspection, component interim inspection, and component overhaul inspection.

7. For the inspection requirements for optional equipment approved under Supplement Type Approval/Certificate (STA/STC), refer to the applicable STA/STC documentation. Maintenance and inspection of these items are the responsibility of the owner/operator.

5-5. DEFINITIONS

- Check, inspect, examine — Look carefully to find the condition of the component. Find how that condition relates to a specific standard.

- Condition — The state of an item compared to a known standard.

- Security — The presence of attaching parts that are properly tightened or appear to be, and the presence of properly installed (as required) locking devices such as lockwire, cotter pins, or other.

- Standard — A specified rule or measure that you use to find the condition of a component.

- Damage — Physical deterioration of a component.

- Discard — Reject a component that has damage that cannot be repaired. To permanently remove from service.

- Inspection — A procedure that includes checking, inspecting, and examining a system or a component.

- Non-scheduled inspection — An inspection that has not been scheduled.

- Periodic inspection — An inspection that is repeated at equal time intervals.

- Progressive inspection — A scheduled inspection that is divided into smaller segments. This makes the best use of the time and the resources available.

- Maintenance — The servicing and/or the repair of a helicopter, a system, or a component that keeps it serviceable.

- Preventive maintenance — To do small maintenance action(s) on a regular basis to prevent non-scheduled maintenance.

- Operating time — Actual flight or calendar time that must be recorded in the Historical Service Records or in the helicopter logs. The operating time is specified as:

  - Time in service (flight time) — The measured time that starts the moment the helicopter leaves the ground and continues until it touches the ground at the next point of landing. The time when the helicopter is on the ground, with the engine and the rotor turning, is not included.

  - Calendar time — The elapsed time starts on the day the inspection is completed, the component is installed, or the rotor is turned for the first time and ends on the last day of the month that the time limit expires. Calendar time is continuous. Calendar time does not stop when you remove a component, put the helicopter in storage, etc.

- Maintenance zone — A specified area of the helicopter that may contain more than one system or more than one group of related components. Maintenance zones (Figure 5-1) are used when you do a progressive inspection.

- Lead-The-Fleet (LTF) Program — This is a program to validate the performance of an approved product improvement or a change to a maintenance interval. The engineering aspects of this change are approved. The program is closely monitored by Bell Helicopter Textron in an operational environment with selected operators.

- Special Programs — These are approved programs that may be initiated under certain special conditions to meet specific requirements. These programs will be clearly defined through a plan and the engineering and maintenance aspects will be approved by the regulatory authorities.

5-6. INSPECTION AND OVERHAUL TOLERANCE

WARNING

DO NOT APPLY THESE TOLERANCES TO PARTS WITH A LIMITED AIRWORTHINESS LIFE (CHAPTER 4).

The Bell Helicopter Textron approved tolerance for scheduled inspections, special inspections, interim inspections, and overhaul intervals, unless otherwise stated, is 10% or up to a maximum of 300 hours operating time/6 months calendar time, whichever is less. The tolerances are established for maintenance scheduling convenience only.

Scheduled inspections, special inspections, interim inspections, or overhaul intervals required beyond the stated tolerances must be approved by Product Support Engineering.

NOTE

The following is only applicable for those operators whose governing aviation authority requires to specifically approve the inspection and overhaul tolerance.

If approval of the inspection and overhaul tolerance is required by the applicable governing aviation authority, this is the responsibility of the owner/operator.

Refer to the Rolls-Royce 250-C28 Series Operation and Maintenance Manual (16W2) or, for 206L1+ IGW Upgrade helicopters, refer to the 250-C30 Series Operation and Maintenance Manual (14W2) for inspection and overhaul tolerances.

The following provide examples of when hourly, calendar, or hourly/calendar inspection tolerances have been applied:

Hourly Example (10% or up to a maximum of 300 hours, whichever is less):

300-HOUR INSPECTION DUE AT:	MAXIMUM ALLOWED TOLERANCE	INSPECTION CARRIED OUT AT:	NEXT 300-HOUR INSPECTION DUE AT:
3400 Hours	10% of 300 hours = 30 hours	3430 Hours (10% tolerance applied)	3730 Hours
3730 Hours	10% of 300 hours = 30 hours	3750 Hours (within 10% tolerance)	4050 Hours
4050 Hours	10% of 300 hours = 30 hours	4050 Hours (tolerance not applied)	4350 Hours

Calendar Example (10% or up to a maximum of 6 months calendar time, whichever is less):

12-MONTH INSPECTION DUE ON:	MAXIMUM ALLOWED TOLERANCE	INSPECTION CARRIED OUT ON:	NEXT 12-MONTH INSPECTION DUE ON:
June 10, 2010	10% of 12 months = 1.2 months	July 12, 2010 (within 10% tolerance)	July 31, 2011 △1
July 31, 2011	10% of 12 months = 1.2 months	June 15, 2011 (completed early)	June 30, 2012 △1
June 30, 2012	10% of 12 months = 1.2 months	June 30, 2012 (tolerance not applied)	June 30, 2013 △1

NOTE:

△1 The last day of the month applies for the next inspection (paragraph 5-5, calendar time).

Hourly/Calendar Example (10% or up to a maximum of 300 hours operating time/6 months calendar time, whichever is less):

2250-HOUR/ 60-MONTH INSPECTION DUE AT:	MAXIMUM ALLOWED TOLERANCE	INSPECTION CARRIED OUT AT:	NEXT 2250-HOUR/ 60-MONTH INSPECTION DUE AT:
3400 Hours/ August 31, 2010	10% of 2250 hours = 225 hours or 10% of 60 months = 6 months	3400 Hours/February 15, 2011 (within 10% calendar tolerance)	5650 Hours/ February 29, 2016 △1
5650 Hours/ February 29, 2016	10% of 2250 hours = 225 hours or 10% of 60 months = 6 months	5875 Hours/April 2, 2016 (10% hourly tolerance applied)	8125 Hours/ April 30, 2021 △1
8125 Hours/ April 30, 2021	10% of 2250 hours = 225 hours or 10% of 60 months = 6 months	8325 Hours/August 3, 2021 (within 10% hourly and calendar tolerance)	10,575 Hours/ August 31, 2026 △1

NOTE:

△1 The last day of the month applies for the next inspection (paragraph 5-5, calendar time).

SCHEDULED INSPECTIONS

5-1. SCHEDULED INSPECTIONS

WARNING

FAILURE TO CORRECT CONDITIONS SUCH AS, BUT NOT LIMITED TO, CORROSION, EROSION, MECHANICAL DAMAGE, OR OBVIOUS WEAR FOUND DURING A SCHEDULED INSPECTION COULD SERIOUSLY AFFECT THE AIRWORTHINESS OF THE HELICOPTER.

Scheduled inspections include the airframe and the component inspections. The scheduled airframe inspection intervals are related to the airframe operating time. The component inspection intervals are related to the component operating time.

5-2. AIRFRAME INSPECTION PROGRAM

Bell Helicopter Textron has developed airframe inspection programs to provide you with the flexibility to permit maximum helicopter use. Depending on the configuration of the helicopter, a 100 or 300-hour airframe progressive inspection as well as a 100 or 300-hour airframe periodic inspection is available. You may choose one of these Bell Helicopter inspection programs or you can design your own program. You are responsible for the selection of an inspection program and for its approval by the governing civil aviation authority.

5-3. AIRFRAME PROGRESSIVE INSPECTION PROGRAMS

If you choose one of the airframe progressive inspection programs, you must first get approval from your local airworthiness authority. The progressive inspections are divided into separate events of similar workload (Table 5-1, Table 5-2, and Figure 5-1).

NOTE

All conditions of Table 5-3 must be met to utilize the 300-hour airframe progressive inspection.

Depending on the helicopter configuration, you have the option to either use the 100-hour airframe progressive inspection program or the 300-hour airframe progressive inspection program. To determine helicopter eligibility to utilize the 300-hour airframe progressive inspection program, refer to Table 5-3.

5-4. 100-HOUR AIRFRAME PROGRESSIVE INSPECTION PROGRAM

The 100-hour airframe progressive inspection program has 4 events. Events occur at intervals of 25 hours. After you complete event No. 4, the cycle begins again with event No. 1 (Table 5-1). You must do a minimum of one complete cycle (all four events) within 12 calendar months. If you do not complete all four events in a 12 calendar month period, the remaining events must be completed prior to operating the helicopter.

Table 5-1. 100-Hour Airframe Progressive Inspection Events

AIRFRAME HOURS	EVENT NUMBER	MAINTENANCE ZONES
25	1	1, 2, and 3
50	2	4 and 5
75	3	6
100	4	7, 8, 9, and 10

In addition to performing the 100-hour airframe progressive inspection program, you also need to perform and record the following scheduled inspections:

NOTE

Every 300 hours of operation, helicopters completing the 100-hour airframe progressive inspection program also need to accomplish the 300-hour inspection.

- 300-hour inspection
- 1000-hour inspection
- 1200-hour inspection

- As required by manufacturer
- Weekly inspection
- 12-month inspection
- 12 months of component operation
- 24-month inspection
- 60-month inspection
- 300-hour or 12-month inspection
- 600 hours or 12 months of component operation
- 1200 hours of component operation
- 1500 hours of component operation
- 1500 hours of component operation and every 50 hours thereafter
- 2250 hours or 60 months of component operation
- 3000 hours of component operation

5-5. 300-HOUR AIRFRAME PROGRESSIVE INSPECTION PROGRAM

The 300-hour airframe progressive inspection program has 6 events. Events occur at intervals of 50 hours. After you complete event No. 6, the cycle begins again with event No. 1 (Table 5-2). You must do a minimum of one complete cycle (all six events) within 12 calendar months. If you do not complete all six events in a 12 calendar month period, the remaining events must be completed prior to operating the helicopter.

Table 5-2. 300-Hour Airframe Progressive Inspection Events

AIRFRAME HOURS	EVENT NUMBER	MAINTENANCE ZONES
50	1	1 and 2
100	2	3
150	3	4

Table 5-2. 300-Hour Airframe Progressive Inspection Events (Cont)

AIRFRAME HOURS	EVENT NUMBER	MAINTENANCE ZONES
200	4	5 and 6
250	5	7 and 8
300	6	9 and 10

In addition to performing the 300-hour airframe progressive inspection program, you also need to perform and record the following scheduled inspections:

NOTE

Helicopters completing the 300-hour airframe progressive inspection program also need to accomplish the 100-hour inspection.

- 100-hour inspection
- 1000-hour inspection
- 1200-hour inspection
- As required by manufacturer
- Weekly inspection
- 12-month inspection
- 12 months of component operation
- 24-month inspection
- 60-month inspection
- Deleted
- 600 hours or 12 months of component operation
- 1200 hours of component operation
- 1500 hours of component operation
- 1500 hours of component operation and every 50 hours thereafter

- 2250 hours or 60 months of component operation
- 3000 hours of component operation

5-6. AIRFRAME PERIODIC INSPECTION PROGRAM

The airframe periodic inspection combines all of the events of the 100 or 300-hour progressive inspection into one event.

NOTE

All conditions of Table 5-3 must be met to utilize the 300-hour airframe periodic inspection.

Depending on the helicopter configuration, you have the option to either use the 100-hour airframe periodic inspection program or the 300-hour airframe periodic inspection program. To determine the helicopter eligibility to utilize the 300-hour airframe periodic inspection program, refer to Table 5-3.

5-7. 100-HOUR AIRFRAME PERIODIC INSPECTION PROGRAM

Do a 100-hour airframe periodic inspection program every 12 calendar months or every 100 hours, whichever occurs first. You must do a minimum of one complete 100-hour airframe periodic inspection within 12 calendar months.

In addition to performing the 100-hour airframe periodic inspection program, you also need to perform and record the following scheduled inspections:

NOTE

Every 300 hours of operation, helicopters completing the 100-hour airframe periodic inspection program also need to accomplish the 300-hour inspection.

- 300-hour inspection
- 1000-hour inspection
- 1200-hour inspection
- As required by manufacturer
- Weekly inspection
- 12-month inspection
- 12 months of component operation
- 24-month inspection
- 60-month inspection
- 300-hour or 12-month inspection
- 600 hours or 12 months of component operation
- 1200 hours of component operation
- 1500 hours of component operation
- 1500 hours of component operation and every 50 hours thereafter
- 2250 hours or 60 months of component operation
- 3000 hours of component operation

5-8. 300-HOUR AIRFRAME PERIODIC INSPECTION PROGRAM

Do a 300 Hour Airframe Periodic Inspection Program every 12 calendar months or every 300 hours, whichever occurs first. You must do a minimum of one complete 300 Hour Airframe Periodic Inspection within 12 calendar months.

In addition to performing the 300-hour airframe periodic inspection program you also need to perform and record the following scheduled inspections:

NOTE

Helicopters completing the 300-hour airframe periodic inspection program also need to accomplish the 100-hour inspection.

- 100-hour inspection
- 1000-hour inspection
- 1200-hour inspection
- As required by manufacturer
- Weekly inspection

- 12-month inspection
- 12 months of component operation
- 24-month inspection
- 60-month inspection
- Deleted
- 600 hours or 12 months of component operation
- 1200 hours of component operation
- 1500 hours of component operation
- 1500 hours of component operation and every 50 hours thereafter
- 2250 hours or 60 months of component operation
- 3000 Hours of Component Operation

5-9. CHANGING INSPECTION PROGRAM

You must use either the airframe periodic inspection program or the airframe progressive inspection program from the start. You can change between the two programs at any airframe operating time as follows:

- To change from a 100-hour airframe progressive inspection program to a 100-hour airframe periodic inspection program, do a complete 100-hour airframe periodic inspection.
- To change from a 100-hour airframe periodic inspection program to a 100-our airframe progressive inspection program, do a complete 100-hour airframe periodic inspection.
- To change from a 300-hour airframe progressive inspection program to a 300-hour airframe periodic inspection program, do a complete 300-hour airframe periodic inspection.
- To change from a 300-hour airframe periodic inspection program to a 300-hour airframe progressive inspection program, do a complete 300-hour airframe periodic inspection.

Table 5-3. 300-Hour Airframe Progressive or 300-Hour Airframe Periodic Inspection Program Prerequisites

NOMENCLATURE	PART NUMBER 2	BULLETIN REFERENCE	ACCEPTABLE ALTERNATES	206L	206L1	206L3	206L4	206L1+ AND 206L3+ IGW UPGRADE
Swashplate and Support Assembly	206-010-450-123	TB 206L-00-201	206-010-450-101 is an acceptable alternate to 206-010-450-123.				X	X
	206-010-450-131	TB 206L-00-201		X	X	X		
Main Rotor Hub Assembly	206-011-100-105	TB 206L-91-152	206-011-100-159 is an acceptable alternate provided ASB 206L-97-108 is accomplished.	X	X	X	X	X
Tail Rotor Hub Assembly	206-011-810-153	TB 206L-09-239		X	X	X	X	X
Tailboom Attachment Fittings and Longeron Assembly	206-031-314-157A or 206-031-314-217B	TB 206L-07-226 or PSE Instructions		X	X	X	X	X
Forward Engine Mount Fittings	206-031-629-103	BHT-206-SRM		X	X	X	X	X
Tailboom Assembly	206-033-004-175/-177 or equivalent with ASB 206L-99-115 accomplished	TB 206L-05-220	206-033-004-181, -199, or -203 and 206-704-727-101.	X	X	X	X	X
Transmission Restraint	206-033-506-103		206-033-506-107 and -109 are acceptable alternates to 206-033-506-103.	X	X	X	X	X
Transmission Assembly	206-040-004-107	TB 206L-91-153 TB 206L-08-229		X	X	X		
	206-040-004-115						X	X

Table 5-3. 300-Hour Airframe Progressive or 300-Hour Airframe Periodic Inspection Program Prerequisites (Cont)

NOMENCLATURE	PART NUMBER (2)	BULLETIN REFERENCE	ACCEPTABLE ALTERNATES	206L	206L1	206L3	206L4	206L1+ AND 206L3+ IGW UPGRADE
Mast Assembly	206-040-014-103	TB 206L-99-195		X	X	X		
	206-040-014-107	TB 206L-99-195					X	X
Main Driveshaft Assembly (Grease Lubricated)	206-040-015-011	ASB 206L-93-91		X				
	206-040-015-015	ASB 206L-93-91			X	X		
Freewheel Assembly	206-040-270-117	TB 206L-01-205		X				
	206-040-270-123	TB 206L-01-205			X	X		
Riveted Aft Short Shaft	206-040-383-101	TB 206L-02-207					X	X
Riveted Tail Rotor Driveshaft Assembly	206-040-387-101	TB 206L-02-207	206-040-370-107/-109/ -115 are acceptable fielded substitutes for 206-040-387-101.	X	X	X	X	X
Tail Rotor Gearbox Assembly	206-040-402-111	TB 206L-99-197	206-040-402-101/-107 are acceptable fielded substitutes for 206-040-402-111.	X	X	X	X	X
Oil Cooler Blower Impeller	206-061-432-109	ASB 206L-86-40		X	X	X	X	X
Main Driveshaft Assembly (KAflex)	206-340-300-105	ASB 206L-01-123 TB 206L-01-204	206-340-300-105M is an acceptable fielded substitute for 206-340-300-105.				X	X
Freewheel Assembly	406-040-500-113 with TB 206L-02-208 and ASB 206L-07-147 accomplished.	TB 206L-01-205					X	X

Table 5-3. 300-Hour Airframe Progressive or 300-Hour Airframe Periodic Inspection Program Prerequisites (Cont)

NOMENCLATURE	PART NUMBER △2	BULLETIN REFERENCE	ACCEPTABLE ALTERNATES	206L	206L1	206L3	206L4	206L1+ AND 206L3+ IGW UPGRADE
Aft Fuselage Bulkhead	407-030-027-103	TB 206L-07-226		X	X	X	X	X
FACET Scavenge Oil Filter System △4	Purolator Kit Number STC # SH200GL			X	X	X	X	X

NOTES:

1. Table 5-3 is not to be used as a configuration listing for the installation of components on 206L Series Helicopters. It is only provided as a prerequisite listing to determine applicability to use the 300-hour airframe progressive inspection program or 300-hour airframe periodic inspection program, as applicable. Refer to the bulletins listed within the table for configuration data as required.

△2 To qualify for the 300-hour airframe progressive inspection program or the 300-hour airframe periodic inspection program, the helicopter must have all of the parts listed installed (or subsequent part numbers to those listed based on configuration/eligibility requirements).

3. If the helicopter does not have all of the parts listed in this table installed, the helicopter is limited to either the 100-hour airframe progressive inspection or the 100-hour airframe periodic inspection.

△4 FACET scavenge oil filter system available from Purolator Facet, Inc., www.purolator-facet.com.

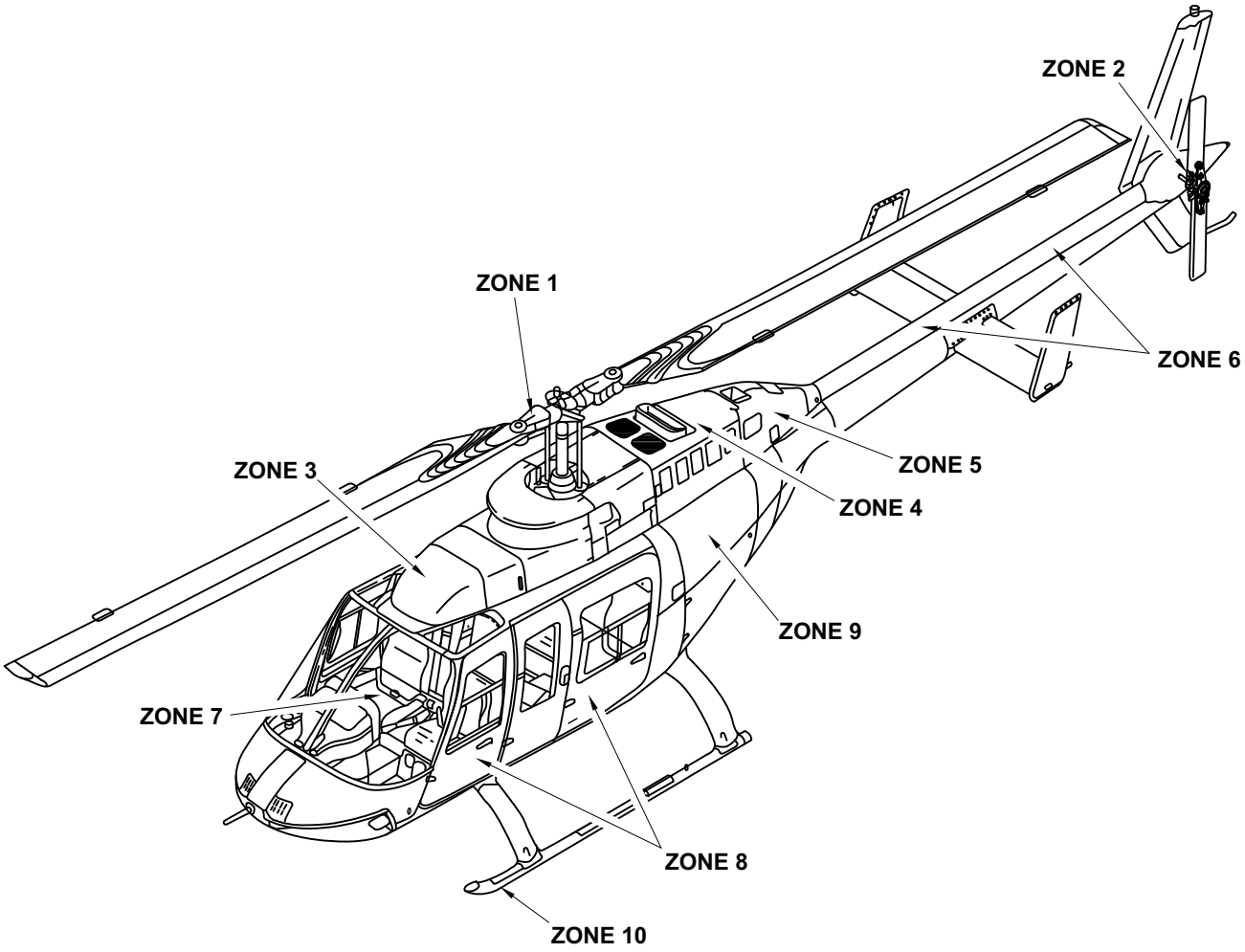

Zone 1 - Main rotor hub and blade assembly
Zone 2 - Tail rotor hub and blade assembly
Zone 3 - Forward top deck
Zone 4 - Power plant
Zone 5 - Aft top deck
Zone 6 - Tailboom
Zone 7 - Cabin interior
Zone 8 - Foward fuselage
Zone 9 - Aft fuselage
Zone 10 - Landing gear

206L4_MM_05_0001

Figure 5-1. Maintenance Zones

PROGRESSIVE INSPECTIONS

5-16. 100-HOUR AIRFRAME PROGRESSIVE INSPECTION — EVENT NO. 1

DATA REFERENCE	INSPECTION TASK DESCRIPTION	INITIAL MECH	INITIAL OTHER
	DATE: _____ **W.O.** _____ **FACILITY:** _____ **HELICOPTER S/N:** _____ **REGISTRY NO.:** _____ **TOTAL TIME:** _____ **SIGNATURE:** _____		
	ZONE 1 — MAIN ROTOR SYSTEM		
Chapter 11	**PLACARDS AND MARKINGS**		
	1. Examine the placards, decals and markings. Make sure they are readable, correctly applied and in agreement with the applicable configuration of your helicopter.		
Chapter 65	**MAIN ROTOR SYSTEM**		
	1. Verify main rotor flap restraint for freedom of movement, and for condition and security.		
	2. Examine static stops and mast for evidence of mast bumping.		
	3. Remove main rotor blade leading edge erosion protection tape, if installed.		
	4. Examine main rotor blades for cleanliness and overall condition. Examine for cracks, corrosion and de-bonding of doublers.		
	5. Examine leading edge of blades for corrosion and erosion. Restore contour as necessary.		
	6. Examine the tip weight cap for corrosion, cracks, erosion, and deformation.		

PROGRESSIVE INSPECTIONS

5-16. 100-HOUR AIRFRAME PROGRESSIVE INSPECTION — EVENT NO. 1 (CONT)

DATA REFERENCE	INSPECTION TASK DESCRIPTION	INITIAL MECH	INITIAL OTHER
	7. If applicable, reinstall main rotor blade leading edge erosion protection tape. **8.** Examine the following main rotor hub assembly components for condition and security: **a.** Mast nut **b.** Trunnion **c.** Pillow blocks **d.** Grips **e.** Pitch horns **f.** Static stops **9.** Examine pitch horn trunnion bearings for evidence of wear, damage, and for security. **10.** Torque check pillow block retention hardware 84 to 107 inch-pounds (9.4 to 12 Nm). Examine for misalignment of anti-slippage marks. **11.** Examine main rotor yoke for corrosion or mechanical damage as follows: **a.** Examine fillet radius of both yoke spindles inboard of wear sleeves for evidence of corrosion. If corrosion is visible, remove with fine abrasive pad (C-407). If corrosion cannot be removed with pads, or is extensive, disassemble hub for inspection and repair. **NOTE** If the main rotor hub must be disassembled, omit remaining steps. **b.** Examine entire yoke centre section (inboard and outboard surfaces) for damage.		
BHT-206L-CR&O			

PROGRESSIVE INSPECTIONS

5-16. 100-HOUR AIRFRAME PROGRESSIVE INSPECTION — EVENT NO. 1 (CONT)

DATA REFERENCE	INSPECTION TASK DESCRIPTION	INITIAL MECH	INITIAL OTHER
	c. Touch up all repaired areas or areas of bare metal in accordance with applicable main rotor hub inspection and repair instructions.		
	d. Ensure no sealant voids are visible around shields or wear sleeve, strap fittings, and grip closure. Recoat with sealant (C-308) as required. On main rotor hub assemblies up to and including P/N 206-011-100-025, coat the remaining exposed fillet radius and repaired surfaces with a film of corrosion preventive compound (C-101).		
	ZONE 2 — TAIL ROTOR ASSEMBLY		
Chapter 11	**PLACARDS AND MARKINGS**		
	1. Examine the placards, decals and markings. Make sure they are readable, correctly applied and in agreement with the applicable configuration of your helicopter.		
Chapter 65	**TAIL ROTOR ASSEMBLY**		
	1. Clean tail rotor blades to maintain visibility of warning stripes.		
BHT-206L-CR&O	**2.** Examine the following tail rotor hub assembly components for condition and security of attachment:		
	a. Yoke		
	b. Pitch horns		
	c. Trunnion and trunnion caps		
	d. Counterweight hardware		
Chapter 66	**3.** Examine tail rotor blades as follows:		
	a. Tip block rivets for damage, corrosion, erosion, and looseness.		
	b. Skin for bulges, nicks, dents, scratches, or other damage.		

PROGRESSIVE INSPECTIONS

5-16. 100-HOUR AIRFRAME PROGRESSIVE INSPECTION — EVENT NO. 1 (CONT)

DATA REFERENCE	INSPECTION TASK DESCRIPTION	INITIAL MECH	INITIAL OTHER
	c. Deformed or cracked skin in the area of the chordwise weights.		
	d. Leading edge for erosion, nicks, dents or scratches.		
	e. Bonded joints of blade skin mating area for suspected voids or cracks. Pay particular attention in the area of tip block and doublers.		
	f. Feathering bearings for looseness and cracks in uniball.		
	4. Examine the following tail rotor hub and blade assembly attaching components for condition and security:		
	a. Spacer		
	b. Rubber bumper		
	c. Static stop		
	d. Nut		
	e. Balance wheel		
	ZONE 3 — FORWARD DECK		
Chapter 11	**PLACARDS AND MARKINGS**		
	1. Examine the placards, decals and markings. Make sure they are readable, correctly applied and in agreement with the applicable configuration of your helicopter.		
	AIRFRAME (FORWARD DECK)		
Chapter 71	**1.** Open and examine forward fairing for condition and security.		
	2. Remove and examine transmission cowling for condition.		
	3. Examine all fairing and cowling latches and/or fasteners for condition		
	4. Examine top deck for condition, leaks and security.		

PROGRESSIVE INSPECTIONS

5-16. 100-HOUR AIRFRAME PROGRESSIVE INSPECTION — EVENT NO. 1 (CONT)

DATA REFERENCE	INSPECTION TASK DESCRIPTION	INITIAL MECH	INITIAL OTHER
Chapter 53	**5.** Clean transmission deck.		
	6. Examine air induction cowling and plenum for damage, obstructions and cleanliness. Examine intake fairing windows for damage and cleanliness.		
	7. Examine inlet screen (if applicable) for missing or damaged wires and rivets.		
	8. On 206L1 Engine Upgrade and 206L1+ IGW Upgrade helicopter, examine particle separator (if applicable) vortex tubes, ejector tubes, and ejector nozzles for cleanliness, condition, and security.		
	9. Examine forward deck drain(s) to ensure absence of obstruction.		
	10. Examine antennas for condition and security.		
Chapter 27	**CONTROLS**		
	1. Examine the following flight control components for signs of interference, corrosion, wear, mechanical damage and security:		
	a. Control tubes.		
	b. Links.		
	c. Rod and bearings.		
	d. Bellcranks.		
	e. Bellcrank supports.		
	f. Attaching bolts and nuts.		
	2. Inspect main rotor pitch links with a 3X magnifying glass for damage, corrosion and cracks. Give particular attention to swaged ends at jam nut or inserts.		
Chapter 76	**3.** Examine N_2 control linkages on forward deck for condition and security. Pay particular attention to the jackshaft assembly for damage or evidence or twisting.		

PROGRESSIVE INSPECTIONS

5-16. 100-HOUR AIRFRAME PROGRESSIVE INSPECTION — EVENT NO. 1 (CONT)

DATA REFERENCE	INSPECTION TASK DESCRIPTION	INITIAL MECH	INITIAL OTHER
	4. Verify all control tubes and bellcranks for freedom of travel throughout range.		
Chapter 65	**SWASHPLATE ASSEMBLY AND MAST**		
	1. Clean swashplate assembly and mast.		
	2. Disconnect main rotor pitch links from outer ring.		
	3. Disconnect idler (drive) link from outer ring.		
	4. Examine swashplate drive assembly for axial, radial, and accumulative wear.		
	5. Disconnect boot from swashplate outer ring and lift up temporarily. Examine boot for evidence of deterioration.		
	6. Verify condition of duplex bearing, before lubrication, as follows:		
	a. Rotate outer ring to check duplex bearing for condition. Bearing must be smooth and show no evidence of roughness, binding, dragging, or looseness.		
	7. Examine pivot sleeve slot sidewalls for wear or deterioration.		
	8. Examine pivot sleeve bearings for wear, deterioration and evidence of excessive axial play between pivot sleeve and swashplate support.		
	9. Examine collar set bushings for cracks and damage.		
	10. Examine swashplate support and uniball surfaces for condition.		
	11. Examine collective lever to sleeve assembly pins for condition.		
	12. Examine inner ring for condition. Examine for evidence of contact with sleeve assembly.		
	13. Examine outer ring for condition.		

PROGRESSIVE INSPECTIONS

5-16. 100-HOUR AIRFRAME PROGRESSIVE INSPECTION — EVENT NO. 1 (CONT)

DATA REFERENCE	INSPECTION TASK DESCRIPTION	INITIAL MECH	INITIAL OTHER
	14. Examine the upper inside diameter of swashplate support for evidence of contact with the mast pole.		
	15. Connect and secure boot, idler (drive) link and main rotor pitch links to outer ring.		
	16. Examine swashplate assembly for condition and security.		
Chapter 66	**17.** Examine mast for condition.		
Chapter 65	**18.** Ensure no sealant voids are visible around the swashplate drive collar set. Re-coat with adhesive (C-307) as required.		
Chapter 29	**HYDRAULIC SYSTEM**		
	1. Examine rigid and flexible fluid lines for chafing, leaks and security.		
	2. Examine hydraulic pump for leaks and general condition.		
	3. Examine hydraulic reservoir for leaks and general condition.		
	4. Examine servo actuators for leaks, condition and security.		
	5. Examine servo actuator support for condition.		
Chapter 27	**6.** Verify linkage pivot bolts on hydraulic servo actuators for freedom of rotation and security.		
	7. Examine hydraulic filter red indicator button (two locations). Button should not be extended.		
Chapter 12	**8.** Verify fluid level in hydraulic tank. Replenish as required. Replace fluid if color has changed color or if fluid emits bad odor.		
	9. Examine manifold, relief valve, and solenoid valve for leaks, condition and security.		
Chapter 66	**TRANSMISSION AND PYLON ASSEMBLY**		
	1. Examine the following pylon support components:		

PROGRESSIVE INSPECTIONS

5-16. 100-HOUR AIRFRAME PROGRESSIVE INSPECTION — EVENT NO. 1 (CONT)

DATA REFERENCE	INSPECTION TASK DESCRIPTION	INITIAL MECH	INITIAL OTHER
	a. Transmission link assemblies and bearings for damage and deterioration. **b.** Nodal beam flexures for condition and security. **c.** Forward and aft nodal beam deck supports for condition and security. Check torque on heads of bolts only (bolts must not rotate). If a bolt is loose, remove nut. Install new nut and torque 75 to 95 inch-pounds (8.4 to 10.7 Nm). **d.** Nodal beam stops for evidence of excessive contact with nodal beam arms. **e.** Transmission restraint for damage and spherical bearings for excessive wear and security. **f.** Stop mount for condition and security. Stop mount bushings for wear. **g.** All pylon support elastomeric components for evidence of deterioration. **h.** All pylon support hardware for security of attachment. **2.** Examine transmission assembly for condition and security. **3.** Examine transmission assembly for evidence of oil leakage. **4.** Examine all fluid lines for chafing, damage and evidence of leakage. **5.** Examine transmission oil for evidence of contamination. **6.** Examine transmission oil filter bypass indicator for condition. Bypass button should not be extended. **7.** Inspect all transmission chip detectors for accumulated material. **8.** Perform functional test of all transmission chip detectors.		

PROGRESSIVE INSPECTIONS

5-16. 100-HOUR AIRFRAME PROGRESSIVE INSPECTION — EVENT NO. 1 (CONT)

DATA REFERENCE	INSPECTION TASK DESCRIPTION	INITIAL MECH	INITIAL OTHER
	9. Ensure no sealant voids are visible around forward and aft nodal beam deck mounted supports and isolation mount. Recoat with sealant (C-308) as required.		
Chapter 66	**MAIN DRIVESHAFT**		
	1. Examine main driveshaft as follows:		
	NOTE TEMP-PLATE indicator dots are of a white or gray color that turn black when exposed to an overtemperature condition. Chemical contamination can also cause the indicating dots to turn black.		
	a. For 206L1 helicopters, examine main driveshaft for visual damage and couplings for grease leakage. Check driveshaft for freedom and smoothness of axial movement. Inspect bolts for security. Inspect TEMP-PLATES for evidence of overheating indication, deterioration, debonding, or excessive discoloration of the epoxy overcoating.		
	2. For 206L1+ IGW Upgrade helicopters, examine the engine to transmission KAflex driveshaft for condition and security. Examine the components as follows:		
	a. Driveshaft for cracks, corrosion, and surface damage.		
	b. Flexframe and bolts for condition and signs of slippage.		
Chapter 96	**ELECTRICAL**		
	1. Examine all electrical components, wires, cables and connectors in the area of the forward deck and transmission for chafing, general condition, and security.		

PROGRESSIVE INSPECTIONS

5-16. 100-HOUR AIRFRAME PROGRESSIVE INSPECTION — EVENT NO. 1 (CONT)

DATA REFERENCE	INSPECTION TASK DESCRIPTION	INITIAL MECH	INITIAL OTHER
	GROUND RUN		
	CAUTION GROUND RUN OF HELICOPTER TO BE ACCOMPLISHED BY QUALIFIED PERSONNEL ONLY.		
Chapter 12	**1.** Make sure applicable servicing requirements have been carried out.		
	2. Check oil level of transmission, hydraulic tank, engine and rail rotor gearbox prior to running helicopter.		
	3. Make sure that helicopter is ready for ground run and that surrounding area is clear.		
BHT-206L1-FM-1 (BHT-206L3-FM-1 for 206L1 Engine Upgrade and BHT-206L4-FM-1 for 206L1+ IGW Upgrade helicopters)	**4.** Start the helicopter and conduct ground run at 100% N_R to check for leaks and ensure all systems are operational and parameters are within Flight Manual limitations.		

PROGRESSIVE INSPECTIONS

5-17. 100-HOUR AIRFRAME PROGRESSIVE INSPECTION — EVENT NO. 2

DATA REFERENCE	INSPECTION TASK DESCRIPTION	INITIAL MECH	INITIAL OTHER
	DATE: _____ W.O. _____		
	FACILITY: _____		
	HELICOPTER S/N: _____		
	REGISTRY NO.: _____		
	TOTAL TIME: _____		
	SIGNATURE: _____		
	ZONE 4 — POWER PLANT		
Chapter 11	**PLACARDS AND MARKINGS**		
	1. Examine the placards, decals and markings. Ensure they are readable, correctly applied and in agreement with the applicable configuration of your helicopter.		
	AIRFRAME (POWER PLANT AREA)		
Chapter 71	**1.** Examine firewalls for condition and security.		
	2. Examine engine pan area for evidence of loose fasteners and damage. Restore cracked or missing sealant form engine pan.		
	3. Examine engine pan drains. Make sure that they are not clogged.		
Chapter 28	**4.** Examine airframe fuel filter assembly for evidence of leakage and security.		
Chapter 71	**5.** Examine engine mount legs for condition and security. Pay particular attention for loose fasteners.		
	6. Examine engine mount fittings for condition and security.		
Applicable Service Instruction	**7.** Examine rotor brake (if installed) for condition and security.		

PROGRESSIVE INSPECTIONS

5-17. 100-HOUR AIRFRAME PROGRESSIVE INSPECTION — EVENT NO. 2 (CONT)

DATA REFERENCE	INSPECTION TASK DESCRIPTION	INITIAL MECH	INITIAL OTHER
Chapter 96	**8.** Examine the primary electrical ground connection in engine pan area for condition and security		
	POWER PLANT		
Rolls-Royce 250-C28 Series Operation and Maintenance Manual, 16W2 (Rolls-Royce 250-C30P Operation and Maintenance Manual, 14W2 for 206L1 Engine Upgrade and 206L1+ IGW Upgrade)	**1.** Do an engine inspection per the applicable Rolls-Royce Operation and Maintenance Manual.		
Chapter 71	**2.** Examine engine inlet bellmouth for obstruction and general condition.		
	3. Examine engine compartment hardware for security of attachment.		
	4. Examine engine for evidence of fuel or oil leaks.		
	5. Examine all flexible and rigid lines for condition and security.		
	a. Pay particular attention for chafing damage and kinked lines.		
	6. Examine exhaust stack for condition and security.		
	7. Examine all engine-mounted accessories for condition and security.		
Chapter 96	**8.** Examine the engine anti-ice solenoid valve for condition and security.		
Chapter 76	**9.** Examine the fuel control lever bolt hole and bolt for wear. Replace parts as necessary.		
	10. DELETED		
	11. DELETED		

PROGRESSIVE INSPECTIONS

5-17. 100-HOUR AIRFRAME PROGRESSIVE INSPECTION — EVENT NO. 2 (CONT)

DATA REFERENCE	INSPECTION TASK DESCRIPTION	INITIAL MECH	INITIAL OTHER
Chapter 76	**12.** Examine engine controls for condition and security. **13.** Verify operation of engine N_1 control as follows: **a.** Ensure proper throttle friction. **b.** Check freedom of full throttle grip travel and idle release operation. Return to closed position. Check copilot throttle if installed. **c.** Ensure fuel control stop lever contact with minimum and maximum stops before throttle grip reaches travel limit. **NOTE** If dual controls are installed, it is permissible for pointer to be 0.06 inch (1.52 mm) below 40° mark (0.078 inch (1.98 mm) for 206L1 Engine Upgrade and 206L1+ IGW Upgrade), when copilot twist grip is used. **d.** Rotate throttle grip to idle detent, fuel control pointer should be no more than 0.01 inch (0.25 mm) below the 40° mark on the quadrant. **e.** Verify control linkage for excessive looseness, lost motion, and binding. **14.** Verify operation of engine N_2 control as follows: **a.** Position N_2 governor actuator to full DECREASE (extended). **b.** Lift collective stick full up. **c.** Position N_2 governor actuator to full INCREASE (retracted). **d.** Verify for clearance between governor stop and lever stop arm. **e.** Lower collective stick full down.		

PROGRESSIVE INSPECTIONS

5-17. 100-HOUR AIRFRAME PROGRESSIVE INSPECTION — EVENT NO. 2 (CONT)

DATA REFERENCE	INSPECTION TASK DESCRIPTION	INITIAL MECH	INITIAL OTHER
	f. Position N_2 governor actuator to full DECREASE (extended).		
	g. Verify for clearance between governor stop and lever stop arm.		
Chapter 71	**h.** Verify control linkage for excessive looseness, lost motion, and binding.		
	DRIVETRAIN		
Chapter 66	**1.** Examine freewheel assembly for condition, leaks, and security.		
Chapter 66 Chapter 96	**2.** Examine the freewheel unit chip detector for accumulated material. Perform operational check of freewheel unit chip detector. (Refer to transmission chip detector caution system.)		
Chapter 66	**3.** Examine forward short shaft (steel) disc pack couplings for condition and security.		
	4. Examine forward short shaft (steel) splined adapters for adequate lubrication and freedom of movement.		
	5. Torque check forward short shaft disc pack coupling fasteners 50 to 70 inch-pounds (5.7 to 7.9 Nm). For 206L1 + IGW Upgrade helicopters, torque check forward short shaft disc pack coupling fasteneres 150 to 180 inch-pounds (16.9 to 20.3 Nm).		
Chapter 96	**ELECTRICAL**		
	1. Examine all electrical components, wires, cables, and connectors in the power plant area for chafing, general condition, and security.		
	2. Verify illumination of airframe fuel filter caution light by depressing differential switch “press to test” button on filter head.		

PROGRESSIVE INSPECTIONS

5-17. 100-HOUR AIRFRAME PROGRESSIVE INSPECTION — EVENT NO. 2 (CONT)

DATA REFERENCE	INSPECTION TASK DESCRIPTION	INITIAL MECH	INITIAL OTHER
	ZONE 5 — AFT TOP DECK		
	PLACARDS AND MARKINGS		
Chapter 11	**1.** Examine the placards, decals and markings. Ensure they are readable, correctly applied and in agreement with the applicable configuration of your helicopter.		
	AIRFRAME (AFT TOP DECK)		
Chapter 71	**1.** Remove and examine aft fairing and attachment fasteners for condition and security.		
	2. Examine fairing retainer for condition.		
	3. Examine exterior of aft deck structure for condition.		
	OIL SYSTEM		
Chapter 79	**1.** Examine oil cooler area for evidence of oil leaks. Examine oil cooler pan for cleanliness and make sure the drain is not blocked.		
	2. Examine all flexible and rigid fluid lines for condition and security.		
	a. Pay particular attention for chafing damage and kinked lines.		
	3. Examine oil cooler core for obstructions and cleanliness.		
Chapter 66	**4.** Examine oil cooler blower and housing for cleanliness, condition and security.		
Chapter 79	**5.** Examine oil tank for leakage, condition and security. Check oil for contamination.		
	6. Examine oil tank supports for condition and security.		
Chapter 71	**7.** Examine the oil cooler seals bonded inside the aft fairing for condition.		

PROGRESSIVE INSPECTIONS

5-17. 100-HOUR AIRFRAME PROGRESSIVE INSPECTION — EVENT NO. 2 (CONT)

DATA REFERENCE	INSPECTION TASK DESCRIPTION	INITIAL MECH	INITIAL OTHER
	8. Examine external scavenge oil filter system (STC) (if installed) for condition and security.		
	DRIVETRAIN		
Chapter 66	**1.** Examine the blower impeller for condition.		
	2. Examine oil cooler blower impeller shaft for condition.		
	3. Examine oil cooler blower hanger bearings and brackets for grease leakage and evidence of overheating.		
	4. Examine aft short shaft (aluminium) for condition and security.		
	5. Examine aft short shaft (aluminium) splined adapter for adequate lubrication and freedom of movement.		
	6. Torque check disc pack coupling fasteners 50 to 70 inch-pounds (5.7 to 7.9 Nm).		
Chapter 96	**ELECTRICAL**		
	1. Examine all electrical components, wires, cables, and connectors in the area of the aft deck for chafing, and general condition and security.		
	GROUND RUN		
	CAUTION GROUND RUN OF HELICOPTER TO BE ACCOMPLISHED BY QUALIFIED PERSONNEL ONLY.		
Chapter 12	**1.** Make sure applicable servicing requirements have been carried out.		
	2. Check oil level of transmission, hydraulic tank, engine and rail rotor gearbox prior to running helicopter.		

PROGRESSIVE INSPECTIONS

5-17. 100-HOUR AIRFRAME PROGRESSIVE INSPECTION — EVENT NO. 2 (CONT)

DATA REFERENCE	INSPECTION TASK DESCRIPTION	INITIAL MECH	INITIAL OTHER
	3. Make sure that helicopter is ready for ground run and that surrounding area is clear.		
BHT-206L1-FM-1 (BHT-206L3-FM-1 for 206L1 Engine Upgrade and BHT-206L4-FM-1 for 206L1+ IGW Upgrade helicopters)	**4.** Start the helicopter and conduct ground run at 100% N_R to check for leaks and ensure all systems are operational and parameters are within Flight Manual limitations.		

PROGRESSIVE INSPECTIONS

5-18. 100-HOUR AIRFRAME PROGRESSIVE INSPECTION — EVENT NO. 3

DATA REFERENCE	INSPECTION TASK DESCRIPTION	INITIAL MECH	INITIAL OTHER
	DATE: _____ **W.O.** _____ **FACILITY:** _____ **HELICOPTER S/N:** _____ **REGISTRY NO.:** _____ **TOTAL TIME:** _____ **SIGNATURE:** _____		
	ZONE 6 — TAILBOOM		
Chapter 11	**PLACARDS AND MARKINGS**		
	1. Examine the placards, decals and markings. Ensure they are readable, correctly applied and in agreement with the applicable configuration of your helicopter.		
Chapter 53	**TAILBOOM STRUCTURE**		
	NOTE In the event that cracks are found during inspection of tailboom, contact Bell Helicopter Textron, Product Support Engineering.		
	1. Examine tailbooms 206-033-004-045 and prior, modified in accordance with ASB 206L-87-47 as follows:		
	a. Remove tail rotor driveshaft and gearbox fairings. Inspect for condition and attachment of fasteners.		
	b. Remove a sufficient amount of anti-chafing tape to permit inspection of tailboom skin adjacent to tail rotor driveshaft cover retention clips aft of horizontal stabilizer, and in area of double row of rivets attaching tail rotor gearbox support fitting to tailboom (BS 174).		

PROGRESSIVE INSPECTIONS

5-18. 100-HOUR AIRFRAME PROGRESSIVE INSPECTION — EVENT NO. 3 (CONT)

DATA REFERENCE	INSPECTION TASK DESCRIPTION	INITIAL MECH	INITIAL OTHER
	c. Prior to cleaning, use a minimum 5X magnifying glass to inspect for cracks and signs of developing cracks at the following locations: **(1)** Aft of stabilizer assembly, around rivets, which attach tail rotor driveshaft cover retention clips to tailboom. **(2)** Area of tail rotor gearbox fairing attachment nutplate rivets. **(3)** Area of double row of rivets, which attach tail rotor gearbox support fitting to tailboom (BS 174). **d.** Clean entire tailboom taking particular care to remove all grime and dirt in specified area of inspection and perform inspection using minimum 5X magnifying glass.		
Chapter 53	**e.** Examine entire tailboom for cracks, dents, deformation, waviness, working rivets, and chafing between tailboom skin and fairing. Pay particular attention to rivets attaching the tail rotor gearbox support to the tailboom.		
BHT-206-SRM	**f.** Replace any loose or working rivets found. **g.** Replace removed, damaged, or worn anti-chafing adhesive tape (C-460) as required. **h.** Inspect doubler and clip edge sealant for integrity. Reseal as required. **i.** As applicable to tailbooms modified in accordance with ASB 206L-99-115, examine doubler around stabilizer on left side for integrity of sealant. Reseal as required. **2.** Inspect tailbooms P/N 206-033-004-143 and subsequent as follows: **a.** Remove tail rotor driveshaft and gearbox fairings. Inspect for condition and attachment of fasteners. **b.** Check anti-chafing adhesive tape (C-460) on tailboom for condition. Replace worn or damaged tape as required.		

PROGRESSIVE INSPECTIONS

5-18. 100-HOUR AIRFRAME PROGRESSIVE INSPECTION — EVENT NO. 3 (CONT)

DATA REFERENCE	INSPECTION TASK DESCRIPTION	INITIAL MECH	INITIAL OTHER
	c. Inspect entire tailboom for cracks, dents, deformation, working rivets, and chafing between tailboom skin and fairing. Pay particular attention to rivets attaching the tail rotor gearbox support to the tailboom.		
BHT-206-SRM	**d.** Replace any loose or working rivets found.		
	e. Inspect all clip edges for integrity of sealant. Reseal as required.		
	f. As applicable to tailbooms modified in accordance with ASB 206L-99-115, examine doubler around stabilizer on left side for integrity of sealant. Reseal as required.		
	3. Examine horizontal stabilizer for condition and security of attachment. Verify security of all attachment bolts.		
	4. Examine elevators for condition, security of attachment, and side play.		
	5. Examine auxiliary finlets for condition and security.		
	6. Inspect the vertical fin attachment support for condition and damage. Pay particular attention to the vertical fin attachment points.		
	7. Examine vertical fin assembly for condition and security.		
Chapter 32	**8.** Examine vertical fin and tail skid for condition, security, and signs of ground contact.		
	9. Examine for open tailboom drains on lower skin and clear any obstructions.		
	10. Examine antennas for damage and security.		
	TAIL ROTOR DRIVESHAFTS		
Chapter 66	**1.** Examine tail rotor driveshaft hanger bearings for excessive grease leakage and evidence of overheating.		
	2. Examine segmented driveshafts and aft splined adapter for condition and security. Check aft splined adapter for adequate lubrication and freedom of movement.		

PROGRESSIVE INSPECTIONS

5-18. 100-HOUR AIRFRAME PROGRESSIVE INSPECTION — EVENT NO. 3 (CONT)

DATA REFERENCE	INSPECTION TASK DESCRIPTION	INITIAL MECH	INITIAL OTHER
	3. Torque check disc pack coupling fasteners 50 to 70 inch-pounds (5.7 to 7.9 Nm).		
	TAIL ROTOR GEARBOX		
Chapter 53	**1.** Examine tail rotor gearbox support for condition and security. Pay particular attention for cracks at the gearbox attachment holes.		
Chapter 66	**2.** Examine tail rotor gearbox for oil leaks, condition and security.		
	3. Examine gearbox oil for evidence of contamination.		
	4. Examine tail rotor output shaft for condition.		
Chapter 66	**5.** Examine the tail rotor gearbox chip detector for accumulated material.		
Chapter 96	**6.** Perform operational check of the tail rotor gearbox chip detector.		
Chapter 27	**TAIL ROTOR PITCH CHANGE CONTROLS**		
	1. Examine the tail rotor pitch control mechanism for freedom of travel throughout range and for condition and security.		
	2. Examine the following tail rotor pitch change components:		
	a. Boot for condition, security, and evidence of grease or oil leakage.		
	b. Lower control mechanism rod for condition of bearings.		
	c. Pitch links and spherical bearings for condition and security.		
	d. Crosshead for condition and security.		
	e. Knurled nut for condition and security and liner for excessive play.		

PROGRESSIVE INSPECTIONS

5-18. 100-HOUR AIRFRAME PROGRESSIVE INSPECTION — EVENT NO. 3 (CONT)

DATA REFERENCE	INSPECTION TASK DESCRIPTION	INITIAL MECH	INITIAL OTHER
Chapter 96	**ELECTRICAL** **1.** Examine all visible electrical components, wires, cables, and connectors in the area of the tailboom for chafing, and general condition and security. **2.** Verify navigation lights and anti-collision light for operation, condition, and security.		
Chapter 97	**3.** Examine antennas for condition and security.		
	GROUND RUN **CAUTION** GROUND RUN OF HELICOPTER TO BE ACCOMPLISHED BY QUALIFIED PERSONNEL ONLY.		
Chapter 12	**1.** Make sure applicable servicing requirements have been carried out. **2.** Check oil level of transmission, hydraulic tank, engine and rail rotor gearbox prior to running helicopter. **3.** Make sure that helicopter is ready for ground run and that surrounding area is clear.		
BHT-206L1-FM-1 (BHT-206L3-FM-1 for 206L1 Engine Upgrade and BHT-206L4-FM-1 for 206L1+ IGW Upgrade helicopters)	**4.** Start the helicopter and conduct ground run at 100% N_R to check for leaks and ensure all systems are operational and parameters are within Flight Manual limitations.		

PROGRESSIVE INSPECTIONS

5-19. 100-HOUR AIRFRAME PROGRESSIVE INSPECTION — EVENT NO. 4

DATA REFERENCE	INSPECTION TASK DESCRIPTION	INITIAL MECH	INITIAL OTHER
	DATE: _____ **W.O.** _____		
	FACILITY: _____		
	HELICOPTER S/N: _____		
	REGISTRY NO.: _____		
	TOTAL TIME: _____		
	SIGNATURE: _____		
	ZONE 7 — CABIN INTERIOR		
Chapter 11	**PLACARDS AND MARKINGS**		
	1. Examine the placards, decals and markings. Ensure they are readable, correctly applied and in agreement with the applicable configuration of your helicopter.		
BHT-206L1-FM-1 (BHT-206L3-FM-1 for 206L1 Engine Upgrade and BHT-206L4-FM-1 for 206L1+ IGW Upgrade helicopters)	**INSTRUMENTS**		
	1. Examine instruments and instrument panel for condition, security and for correct markings.		
	EQUIPMENT AND FURNISHINGS		
Chapter 53	**1.** Examine the cabin floor for condition.		
Chapter 25	**2.** Examine the seat assemblies for condition and security.		
IL GEN-05-103	**3.** Examine passenger and crew restraints and webbing for condition and security.		

PROGRESSIVE INSPECTIONS

5-19. 100-HOUR AIRFRAME PROGRESSIVE INSPECTION — EVENT NO. 4 (CONT)

DATA REFERENCE	INSPECTION TASK DESCRIPTION	INITIAL MECH	INITIAL OTHER
	4. Verify operation of passenger and crew inertia reels and belt buckles. Pull promptly on each reel to confirm the proper activation of the reel locking mechanism.		
	5. Examine the interior trim for condition and security.		
Chapter 56	**6.** Verify sliding windows for safety and smoothness of sliding.		
Chapter 21	**7.** Examine the ventilation system for condition and security.		
	8. Verify nose vents for proper operation, absence of obstructions or debris, and open drains.		
Chapter 95	**9.** Verify for proper operation of the fuel valve switch guard.		
Chapter 26	**10.** Inspect cabin fire extinguisher for condition, security and proper charge.		
Chapter 21	**11.** Verify proper operation of ventilation inlet control cables.		
	12. Examine first aid kit, replace missing or out of date items.		
Chapter 27	**CONTROLS**		
	1. Examine the collective control stick for condition and security. Examine copilot collective control stick if installed.		
	2. Examine the cyclic control stick for condition and security. Examine copilot cyclic control stick if installed.		
	3. Examine the anti-torque control pedals for condition and security. Examine copilot anti-torque control pedals if installed.		
Chapter 96	**ELECTRICAL**		
	1. Verify operation of cockpit map reading light.		
	2. Verify operation of aft cabin reading lights (if installed).		

PROGRESSIVE INSPECTIONS

5-19. 100-HOUR AIRFRAME PROGRESSIVE INSPECTION — EVENT NO. 4 (CONT)

DATA REFERENCE	INSPECTION TASK DESCRIPTION	INITIAL MECH	INITIAL OTHER
	CAUTION USE EXTREME CARE WHEN IN PROXIMITY OF PITOT TUBE WITH HEAT APPLIED, TOUCHING TUBE MAY RESULT IN SERIOUS BURNS.		
	3. Verify operation of the pitot tube heating system.		
	4. Verify operation of defog blowers.		
	5. Verify operation of ENGINE OUT and LOW ROTOR RPM audio and mute switch (if installed).		
	6. Verify illumination of all caution panel annunciator light segments by depressing test switch, or each individual light segment, as applicable.		
	7. Verify instrument lighting and dimming capabilities.		
	ZONE 8 — FORWARD FUSELAGE		
	PLACARDS AND MARKINGS		
Chapter 11	**1.** Examine the placards, decals and markings. Ensure they are readable, correctly applied and in agreement with the applicable configuration of your helicopter.		
	FUSELAGE		
Chapter 53	**1.** Examine forward fuselage for condition.		
Chapter 52	**2.** Examine all cabin doors for condition and security. Give special attention to the following **a.** Hinges **b.** Seals **c.** Latches for proper adjustment, positive locking, and wear		

PROGRESSIVE INSPECTIONS

5-19. 100-HOUR AIRFRAME PROGRESSIVE INSPECTION — EVENT NO. 4 (CONT)

DATA REFERENCE	INSPECTION TASK DESCRIPTION	INITIAL MECH	INITIAL OTHER
	d. Windows		
	e. Handles		
Chapter 95	**3.** Drain moisture from pitot and static piping installation.		
Chapter 53	**4.** Examine the external power door and receptacle for condition and security.		
	5. Examine battery compartment door, door seal and attachment for condition and security.		
Chapter 52	**6.** Examine components in battery compartment for condition and security.		
Chapter 32	**7.** Examine cabin entry steps (if installed) for condition and security.		
Chapter 52	**8.** Examine windshields and skylights for condition.		
Chapter 53	**9.** Examine upper fuselage for evidence of water leaks.		
	10. Examine lower fuselage for indication of fuel leaks, dents, cracks, corrosion, delamination, loose or missing rivets, and condition.		
	11. Examine all fuselage sealant joints for condition. Restore sealant as necessary.		
Chapter 96 and Chapter 97	**ELECTRICAL AND AVIONICS**		
	1. Examine all visible electrical components, wires, cables, and connectors in the area of the forward fuselage for chafing, and general condition and security.		
	2. Examine battery and vent tubes for condition and security.		
	3. Perform operational test of the battery temperature indicating system.		
	4. Verify operation of litter door open warning light.		
	5. Verify operation of landing lights.		

PROGRESSIVE INSPECTIONS

5-19. 100-HOUR AIRFRAME PROGRESSIVE INSPECTION — EVENT NO. 4 (CONT)

DATA REFERENCE	INSPECTION TASK DESCRIPTION	INITIAL MECH	INITIAL OTHER
	6. Verify operation of lower fuselage mounted position lights (if installed).		
	7. Examine antennas for condition and security.		
	ZONE 9 — AFT FUSELAGE		
	PLACARDS AND MARKINGS		
Chapter 11	**1.** Examine the placards, decals and markings. Make sure they are readable, correctly applied and in agreement with the applicable configuration of your helicopter.		
	FUSELAGE (EXTERIOR)		
Chapter 53	**1.** Examine aft fuselage for dents, cracks, corrosion, delamination, loose or missing rivets and condition.		
	2. Examine aft fuselage for indications of fuel or oil leaks.		
Chapter 28	**3.** Examine the fuel cap for condition and security.		
Chapter 96	**4.** Examine the grounding plug for condition.		
Chapter 6 and Chapter 53	**5.** Examine all fuselage drains for condition and freedom from obstructions.		
Applicable Service Instruction	**6.** Examine heater and/or air conditioning inlets and outlets for cleanliness and absence of obstructions, (if installed).		
Chapter 53	**7.** Examine baggage compartment door, seal, and latches for operation, condition, and security.		
Chapter 96	**8.** Verify operation of the baggage door ajar caution light, (if installed).		
	FUSELAGE (INTERIOR)		
Chapter 53	**1.** Examine baggage compartment for condition.		
	2. Gain access to inside of aft fuselage through access panels in baggage compartment and access panel located on the aft right hand fuselage:		

PROGRESSIVE INSPECTIONS

5-19. 100-HOUR AIRFRAME PROGRESSIVE INSPECTION — EVENT NO. 4 (CONT)

DATA REFERENCE	INSPECTION TASK DESCRIPTION	INITIAL MECH	INITIAL OTHER
	a. Examine access panels and fasteners for condition.		
	b. Examine under engine pan for fuel, oil or water leaks.		
	c. Examine drain lines for condition and security.		
	d. Examine aft fuselage longerons for cracks, corrosion, and condition. Pay particular attention to the upper left longeron between aft fuselage frame at STA 204.49 and frame at STA 231.48.		
	e. Examine interface between longerons and engine pan structure for cracks, corrosion, distortion and loose fasteners.		
	f. Inspect engine mount attachment structure for condition.		
	CAUTION ANY CRACK, CORROSION, OR LOOSE OR SHEARED RIVET IS CAUSE FOR IMMEDIATE GROUNDING OF THE HELICOPTER UNTIL THE PROBLEM IS CORRECTED.		
Chapter 53 Chapter 4	**g.** Examine the four tailboom attachment fittings on fuselage aft bulkhead and tailboom forward bulkhead for cracks. Give special attention to the tailboom attachment fittings/ intercostals and bolts, and to fasteners between the intercostal. Particular attention must be given to inspection of the upper left fitting (refer to Chapter 4, Inspection Limitations Schedule),		
	CONTROLS		
Chapter 27	**1.** Examine the anti-torque control system components for condition and security.		
	2. Examine the stabilizer elevator control system components for condition and security.		

PROGRESSIVE INSPECTIONS

5-19. 100-HOUR AIRFRAME PROGRESSIVE INSPECTION — EVENT NO. 4 (CONT)

DATA REFERENCE	INSPECTION TASK DESCRIPTION	INITIAL MECH	INITIAL OTHER
Chapter 96 and Chapter 97	**ELECTRICAL AND AVIONICS**		
	1. Examine antennas for condition and security.		
	2. Examine all components, electrical wiring, cables, and connectors for chafing, general condition, and security.		
	3. Examine all optional equipment installed in the aft fuselage area for condition and security.		
	4. Verify proper operation of fuel sump drain valve switch.		
	ZONE 10 — LANDING GEAR		
Chapter 11	**PLACARDS AND MARKINGS**		
	1. Examine the placards, decals and markings. Ensure they are readable, correctly applied and in agreement with the applicable configuration of your helicopter.		
Chapter 32	**CROSSTUBES**		
	1. Examine crosstube retaining straps, cushions, and attaching hardware for condition and security.		
	2. Examine fuselage attachment fittings for condition and security.		
	3. Examine electrical bonding strips (if installed) for condition and security.		
	4. Examine fairings (if installed) for condition and security.		
	5. Examine crosstube riveted or clamped supports for condition and security. Give particular attention to the sealant joints around supports. Restore sealant (C-251) and paint finish as required.		
	6. Examine crosstubes for corrosion and damage. Give particular attention to areas where equipment is mounted. Repair and/or restore surface protection as required.		

PROGRESSIVE INSPECTIONS

5-19. 100-HOUR AIRFRAME PROGRESSIVE INSPECTION — EVENT NO. 4 (CONT)

DATA REFERENCE	INSPECTION TASK DESCRIPTION	INITIAL MECH	INITIAL OTHER
	7. Examine cabin entry steps for condition and security (if installed).		
	8. Examine sealant joint at junction with skid tube saddles. Restore sealant (C-251) and paint finish as required.		
Chapter 32	**SKID TUBES**		
	1. Examine skid tubes for corrosion, damage, and security.		
	2. Examine skid shoes for condition and security.		
	3. Examine skid tube saddles for corrosion, damage, and security.		
	4. Examine ground handling wheel attachment bolts for condition and security.		
	GROUND RUN		
	CAUTION GROUND RUN OF HELICOPTER TO BE ACCOMPLISHED BY QUALIFIED PERSONNEL ONLY.		
Chapter 12	**1.** Make sure applicable servicing requirements have been carried out.		
	2. Check oil level of transmission, hydraulic tank, engine and rail rotor gearbox prior to running helicopter.		
	3. Make sure that helicopter is ready for ground run and that surrounding area is clear.		
BHT-206L1-FM-1 (BHT-206L3-FM-1 for 206L1 Engine Upgrade and BHT-206L4-FM-1 for 206L1+ IGW Upgrade helicopters)	**4.** Start the helicopter and conduct ground run at 100% N_R to check for leaks and ensure all systems are operational and parameters are within Flight Manual limitations.		

PROGRESSIVE INSPECTIONS

5-19. 100-HOUR AIRFRAME PROGRESSIVE INSPECTION — EVENT NO. 4 (CONT)

DATA REFERENCE	INSPECTION TASK DESCRIPTION	INITIAL MECH	INITIAL OTHER
Chapter 96	**5.** Check the voltage regulator setting.		

PERIODIC INSPECTION

5-20. 100-HOUR AIRFRAME PERIODIC INSPECTION

DATA REFERENCE	INSPECTION TASK DESCRIPTION	INITIAL MUCH	INITIAL OTHER
Chapter 5 Paragraph 5-16 through paragraph 5-19	**DATE:** _____ **W.O.** _____ **FACILITY:** _____ **HELICOPTER S/N:** _____ **REGISTRY NO.:** _____ **TOTAL TIME:** _____ **SIGNATURE:** _____ **1.** Do this inspection every 100 hours of operation or every 12 calendar months. **2.** Do all four events of the 100-hour progressive inspection.		

PROGRESSIVE INSPECTIONS

5-21. 300-HOUR AIRFRAME PROGRESSIVE INSPECTION — EVENT NO. 1

DATA REFERENCE	INSPECTION TASK DESCRIPTION	INITIAL MECH	INITIAL OTHER
	DATE: _____ **W.O.** _____ **FACILITY:** _____ **HELICOPTER S/N:** _____ **REGISTRY NO.:** _____ **TOTAL TIME:** _____ **SIGNATURE:** _____		
	ZONE 1 — MAIN ROTOR SYSTEM		
Chapter 11	**PLACARDS AND MARKINGS**		
	1. Examine the placards, decals and markings. Make sure they are readable, correctly applied and in agreement with the applicable configuration of your helicopter.		
Chapter 65	**MAIN ROTOR SYSTEM**		
	1. Verify main rotor flap restraint for freedom of movement, and for condition and security.		
	2. Examine static stops and mast for evidence of mast bumping.		
	3. Remove main rotor blade leading edge erosion protection tape, if installed.		
	4. Examine main rotor blades for cleanliness and overall condition. Examine for cracks, corrosion and de-bonding of doublers.		
	5. Examine leading edge of blades for corrosion and erosion. Restore contour as necessary.		
	6. Examine the tip weight cap for corrosion, cracks, erosion, and deformation.		

PROGRESSIVE INSPECTIONS

5-21. 300-HOUR AIRFRAME PROGRESSIVE INSPECTION — EVENT NO. 1 (CONT)

DATA REFERENCE	INSPECTION TASK DESCRIPTION	INITIAL MECH	INITIAL OTHER
BHT-206L-CR&O	**7.** If applicable, reinstall main rotor blade leading edge erosion protection tape. **8.** Examine the following main rotor hub assembly components for condition and security: **a.** Mast nut **b.** Trunnion **c.** Pillow blocks **d.** Grips **e.** Pitch horns **f.** Static stops **9.** Examine pitch horn trunnion bearings for evidence of wear, damage, and for security. **10.** Examine main rotor yoke for corrosion or mechanical damage as follows: **a.** Examine fillet radius of both yoke spindles inboard of wear sleeves for evidence of corrosion. If corrosion is visible, remove with fine abrasive pad (C-407). If corrosion cannot be removed with pads, or is extensive, disassemble hub for inspection and repair. **NOTE** If the main rotor hub must be disassembled, omit remaining steps. **b.** Examine entire yoke centre section (inboard and outboard surfaces) for damage. **c.** Touch up all repaired areas or areas of bare metal in accordance with applicable main rotor hub inspection and repair instructions.		

PROGRESSIVE INSPECTIONS

5-21. 300-HOUR AIRFRAME PROGRESSIVE INSPECTION — EVENT NO. 1 (CONT)

DATA REFERENCE	INSPECTION TASK DESCRIPTION	INITIAL MECH	INITIAL OTHER
	d. Ensure no sealant voids are visible around shields or wear sleeve, strap fittings, and grip closure. Recoat with sealant (C-308) as required. On main rotor hub assemblies up to and including P/N 206-011-100-025, coat the remaining exposed fillet radius and repaired surfaces with a film of corrosion preventive compound (C-101).		
	ZONE 2 — TAIL ROTOR ASSEMBLY		
Chapter 11	**PLACARDS AND MARKINGS**		
	1. Examine the placards, decals and markings. Make sure they are readable, correctly applied and in agreement with the applicable configuration of your helicopter.		
Chapter 65	**TAIL ROTOR ASSEMBLY**		
	1. Clean tail rotor blades to maintain visibility of warning stripes.		
BHT-206L-CR&O	**2.** Examine the following tail rotor hub assembly components for condition and security of attachment:		
	a. Yoke		
	b. Pitch horns		
	c. Trunnion and trunnion caps		
	d. Counterweight hardware		
Chapter 65	**3.** Examine tail rotor blades as follows:		
	a. Tip block rivets for damage, corrosion, erosion, and looseness.		
	b. Skin for bulges, nicks, dents, scratches, or other damage.		
	c. Deformed or cracked skin in the area of the chordwise weights.		
	d. Leading edge for erosion, nicks, dents or scratches.		

PROGRESSIVE INSPECTIONS

5-21. 300-HOUR AIRFRAME PROGRESSIVE INSPECTION — EVENT NO. 1 (CONT)

DATA REFERENCE	INSPECTION TASK DESCRIPTION	INITIAL MECH	INITIAL OTHER
	e. Bonded joints of blade skin mating area for suspected voids or cracks. Pay particular attention in the area of tip block and doublers. **f.** Feathering bearings for looseness and cracks in uniball. **4.** Examine the following tail rotor hub and blade assembly attaching components for condition and security: **a.** Spacer **b.** Rubber bumper **c.** Static stop **d.** Nut **e.** Balance wheel **5.** Check dynamic balance of tail rotor hub and blade assembly and adjust as required during ground run. **GROUND RUN** **CAUTION** GROUND RUN OF HELICOPTER TO BE ACCOMPLISHED BY QUALIFIED PERSONNEL ONLY.		
Chapter 12	**1.** Make sure applicable servicing requirements have been carried out. **2.** Check oil level of transmission, hydraulic tank, engine and rail rotor gearbox prior to running helicopter. **3.** Make sure that helicopter is ready for ground run and that surrounding area is clear.		

PROGRESSIVE INSPECTIONS

5-21. 300-HOUR AIRFRAME PROGRESSIVE INSPECTION — EVENT NO. 1 (CONT)

DATA REFERENCE	INSPECTION TASK DESCRIPTION	INITIAL MECH	INITIAL OTHER
BHT-206L1-FM-1 (BHT-206L3-FM-1 for 206L1 Engine Upgrade and BHT-206L4-FM-1 for 206L1+ IGW Upgrade helicopters)	**4.** Start the helicopter and conduct ground run at 100% N_R to check for leaks and ensure all systems are operational and parameters are within Flight Manual limitations.		

PROGRESSIVE INSPECTIONS

5-22. 300-HOUR AIRFRAME PROGRESSIVE INSPECTION — EVENT NO. 2

DATA REFERENCE	INSPECTION TASK DESCRIPTION	INITIAL MECH	INITIAL OTHER
	DATE: _____ **W.O.** _____		
	FACILITY: _____		
	HELICOPTER S/N: _____		
	REGISTRY NO.: _____		
	TOTAL TIME: _____		
	SIGNATURE: _____		
	ZONE 3 — FORWARD DECK		
Chapter 11	**PLACARDS AND MARKINGS**		
	1. Examine the placards, decals and markings. Make sure they are readable, correctly applied and in agreement with the applicable configuration of your helicopter.		
	AIRFRAME (FORWARD DECK)		
Chapter 71	**1.** Open and examine forward fairing for condition and security.		
	2. Remove and examine transmission cowling for condition.		
	3. Examine all fairing and cowling latches and/or fasteners for condition.		
	4. Examine top deck for condition, leaks and security.		
Chapter 53	**5.** Clean transmission deck.		
	6. Examine air indication cowling and plenum for damage, obstructions and cleanliness. Examine intake fairing windows for damage and cleanliness.		
	7. Examine inlet screen (if applicable) for missing or damaged wires and rivets.		

PROGRESSIVE INSPECTIONS

5-22. 300-HOUR AIRFRAME PROGRESSIVE INSPECTION — EVENT NO. 2 (CONT)

DATA REFERENCE	INSPECTION TASK DESCRIPTION	INITIAL MECH	INITIAL OTHER
	8. On 206L1 Engine Upgrade and 206L1+ IGW Upgrade, examine particle separator (if applicable) vortex tubes, ejector tubes, and ejector nozzles for cleanliness, condition, and security.		
	9. Examine forward deck drain(s) to ensure absence of obstruction.		
	10. Examine antennas for condition and security.		
Chapter 27	**CONTROLS**		
	1. Examine the following flight control components for signs of interference, corrosion, wear, mechanical damage and security:		
	a. Control tubes.		
	b. Links.		
	c. Rod and bearings.		
	d. Bellcranks.		
	e. Bellcrank supports.		
	f. Attaching bolts and nuts.		
	2. Inspect main rotor pitch links with a 3X magnifying glass for damage, corrosion and cracks. Give particular attention to swaged ends at jam nut or inserts.		
Chapter 76	**3.** Examine N_2 control linkages on forward deck for condition and security. Pay particular attention to the jackshaft assembly for damage or evidence or twisting.		
	4. Verify all control tubes and bellcranks for freedom of travel throughout range.		
Chapter 65	**SWASHPLATE ASSEMBLY AND MAST**		
	1. Clean swashplate assembly and mast.		
	2. Disconnect main rotor pitch links from outer ring.		

PROGRESSIVE INSPECTIONS

5-22. 300-HOUR AIRFRAME PROGRESSIVE INSPECTION — EVENT NO. 2 (CONT)

DATA REFERENCE	INSPECTION TASK DESCRIPTION	INITIAL MECH	INITIAL OTHER
	3. Disconnect idler (drive) link from outer ring. **4.** Examine swashplate drive assembly for axial, radial, and accumulative wear. **5.** Disconnect boot from swashplate outer ring and lift up temporarily. Examine boot for evidence of deterioration. **6.** Verify condition of duplex bearing, before lubrication, as follows: **a.** Rotate outer ring to check duplex bearing for condition. Bearing must be smooth and show no evidence of roughness, binding, dragging, or looseness. **7.** Examine pivot sleeve slot sidewalls for wear or deterioration. **8.** Examine pivot sleeve bearings for wear, deterioration and evidence of excessive axial play between pivot sleeve and swashplate support. **9.** Examine collar set bushings for cracks and damage. **10.** Examine swashplate support and uniball surfaces for condition. **11.** Examine collective lever to sleeve assembly pins and bushings for condition. **12.** Examine inner ring for condition. Examine for evidence of contact with sleeve assembly. **13.** Examine outer ring for condition. **14.** Examine the upper inside diameter of swashplate support for evidence of contact with the mast pole. **15.** Verify and adjust swashplate tilt friction as required. **a.** Value must be between 15 to 32 pounds (67 to 142 N). If out of limits, adjust to 15 to 32 pounds (67 to 142 N) and check again.		

PROGRESSIVE INSPECTIONS

5-22. 300-HOUR AIRFRAME PROGRESSIVE INSPECTION — EVENT NO. 2 (CONT)

DATA REFERENCE	INSPECTION TASK DESCRIPTION	INITIAL MECH	INITIAL OTHER
	16. Connect and secure boot, idler (drive) link and main rotor pitch links to outer ring.		
	17. Examine swashplate assembly for condition and security.		
Chapter 66	**18.** Examine mast for condition.		
Chapter 65	**19.** Ensure no sealant voids are visible around the swashplate drive collar set. Re-coat with adhesive (C-307) as required.		
Chapter 29	**HYDRAULIC SYSTEM**		
	1. Examine rigid and flexible fluid lines for chafing, leaks and security.		
	2. Examine hydraulic pump for leaks and general condition.		
	3. Examine hydraulic pump shaft splines, rotor tachometer splines, and oil pump splines for excessive wear.		
Chapter 12	**4.** Lubricate hydraulic pump shaft splines and rotor tachometer splines.		
	5. Examine hydraulic reservoir for leaks and general condition.		
	6. Examine servo actuators for leaks, condition and security.		
	7. Examine servo actuator support for condition.		
Chapter 27	**8.** Verify linkage pivot bolts on hydraulic servo actuators for freedom of rotation and security.		
	9. Examine hydraulic filter red indicator button (two locations). Button should not be extended.		
Chapter 12	**10.** Verify fluid level in hydraulic tank. Replenish as required. Replace fluid if color has changed color or if fluid emits bad odor.		
	11. Examine manifold, relief valve, and solenoid valve for leaks, condition and security.		

PROGRESSIVE INSPECTIONS

5-22. 300-HOUR AIRFRAME PROGRESSIVE INSPECTION — EVENT NO. 2 (CONT)

DATA REFERENCE	INSPECTION TASK DESCRIPTION	INITIAL MECH	INITIAL OTHER
Chapter 66	**TRANSMISSION AND PYLON ASSEMBLY** **1.** Examine the following pylon support components: **a.** Transmission link assemblies and bearings for damage and deterioration. **b.** Nodal beam flexures for condition and security. **c.** Forward and aft nodal beam deck supports for condition and security. **d.** Nodal beam stops for evidence of excessive contact with nodal beam arms. **e.** Transmission restraint for damage and spherical bearings for excessive wear and security. **f.** Stop mount for condition and security. Stop mount bushings for wear. **g.** All pylon support elastomeric components for evidence of deterioration. **h.** All pylon support hardware for security of attachment. **2.** Examine transmission assembly for condition and security. **3.** Examine transmission assembly for evidence of oil leakage. **4.** Examine all fluid lines for chafing, damage and evidence of leakage. **5.** Examine transmission oil for evidence of contamination. **6.** Examine transmission oil filter bypass indicator for condition. Bypass button should not be extended. **7.** Inspect all transmission chip detectors for accumulated material.		
Chapter 96	**8.** Perform functional test of all transmission chip detectors.		

PROGRESSIVE INSPECTIONS

5-22. 300-HOUR AIRFRAME PROGRESSIVE INSPECTION — EVENT NO. 2 (CONT)

DATA REFERENCE	INSPECTION TASK DESCRIPTION	INITIAL MECH	INITIAL OTHER
	9. Ensure no sealant voids are visible around forward and aft nodal beam deck mounted supports and isolation mount. Recoat with sealant (C-308) as required.		
Chapter 66	**MAIN DRIVESHAFT** **1.** Examine main driveshaft as follows: **NOTE** TEMP-PLATE indicator dots are of a white or gray color that turn black when exposed to an overtemperature condition. Chemical contamination can also cause the indicating dots to turn black. **a.** For 206L1 helicopters, examine main driveshaft for visual damage and couplings for grease leakage. Check driveshaft for freedom and smoothness of axial movement. Inspect bolts for security. Inspect TEMP-PLATES for evidence of overheating indication, deterioration, debonding, or excessive discoloration of the epoxy overcoating. **2.** For 206L1+ IGW Upgrade helicopters, examine the engine to transmission KAflex driveshaft for condition and security. Examine the components as follows: **a.** Driveshaft for cracks, corrosion, and surface damage. **b.** Flexframe and bolts for condition and signs of slippage.		
Chapter 96	**ELECTRICAL** **1.** Examine all electrical components, wires, cables and connectors in the area of the forward deck and transmission for chafing, general condition, and security.		

PROGRESSIVE INSPECTIONS

5-22. 300-HOUR AIRFRAME PROGRESSIVE INSPECTION — EVENT NO. 2 (CONT)

DATA REFERENCE	INSPECTION TASK DESCRIPTION	INITIAL MECH	INITIAL OTHER
	GROUND RUN		
	CAUTION GROUND RUN OF HELICOPTER TO BE ACCOMPLISHED BY QUALIFIED PERSONNEL ONLY.		
Chapter 12	**1.** Make sure applicable servicing requirements have been carried out.		
	2. Check oil level of transmission, hydraulic tank, engine and rail rotor gearbox prior to running helicopter.		
	3. Make sure that helicopter is ready for ground run and that surrounding area is clear.		
BHT-206L1-FM-1 (BHT-206L3-FM-1 for 206L1 Engine Upgrade and BHT-206L4-FM-1 for 206L1+ IGW Upgrade helicopters)	**4.** Start the helicopter and conduct ground run at 100% N_R to check for leaks and ensure all systems are operational and parameters are within Flight Manual limitations.		

PROGRESSIVE INSPECTIONS

5-23. 300-HOUR AIRFRAME PROGRESSIVE INSPECTION — EVENT NO. 3

DATA REFERENCE	INSPECTION TASK DESCRIPTION	INITIAL MECH	INITIAL OTHER
	DATE: _____ **W.O.** _____		
	FACILITY: _____		
	HELICOPTER S/N: _____		
	REGISTRY NO.: _____		
	TOTAL TIME: _____		
	SIGNATURE: _____		
	ZONE 4 — POWER PLANT		
Chapter 11	**PLACARDS AND MARKINGS**		
	1. Examine the placards, decals and markings. Ensure they are readable, correctly applied and in agreement with the applicable configuration of your helicopter.		
	AIRFRAME (POWER PLANT AREA)		
Chapter 71	**1.** Examine firewalls for condition and security.		
Chapter 53	**2.** Examine engine cowlings and doors for condition and security. Using a bright light and mirror, inspect exposed upper and lower edges of the joints between aluminium longerons and titanium engine pan. Edge of sealant coating should be visible. No indications of corrosion or cracks are acceptable.		
	3. Examine engine pan area for evidence of loose fasteners and damage. Restore cracked or missing sealant form engine pan.		
	4. Examine engine pan drains. Make sure that they are not clogged.		
Chapter 28	**5.** Examine airframe fuel filter assembly for evidence of leakage and security.		

PROGRESSIVE INSPECTIONS

5-23. 300-HOUR AIRFRAME PROGRESSIVE INSPECTION — EVENT NO. 3 (CONT)

DATA REFERENCE	INSPECTION TASK DESCRIPTION	INITIAL MECH	INITIAL OTHER
Chapter 71	**6.** Examine engine mount legs for condition and security. Pay particular attention for loose fasteners.		
	7. Examine engine mount fittings for condition and security.		
Applicable Service Instruction	**8.** Examine rotor brake (if installed) for condition and security.		
Chapter 96	**9.** Examine the primary electrical ground connection in engine pan area for condition and security		
	POWER PLANT		
Rolls-Royce 250-C28 Series Operation and Maintenance Manual, 16W2 (Rolls-Royce 250-C30P Operation and Maintenance Manual, 14W2 for 206L1 Engine Upgrade and 206L1+ IGW Upgrade)	**1.** Perform engine inspection per the applicable Rolls-Royce Operation and Maintenance Manual.		
Chapter 71	**2.** Examine engine inlet bellmouth for obstruction and general condition.		
	3. Examine engine compartment hardware for security of attachment.		
	4. Examine engine for evidence of fuel or oil leaks.		
	5. Examine all flexible and rigid lines for condition and security.		
	a. Pay particular attention for chafing damage and kinked lines.		
	6. Examine exhaust stack for condition and security.		
	7. Examine all engine-mounted accessories for condition and security.		

PROGRESSIVE INSPECTIONS

5-23. 300-HOUR AIRFRAME PROGRESSIVE INSPECTION — EVENT NO. 3 (CONT)

DATA REFERENCE	INSPECTION TASK DESCRIPTION	INITIAL MECH	INITIAL OTHER
Chapter 96	**8.** Examine the engine anti-ice solenoid valve for condition and security.		
Chapter 76	**9.** Examine the fuel control lever bolt hole and bolt for wear. Replace parts as necessary.		
	10. DELETED		
	11. DELETED		
Chapter 95	**12.** Do an operational check of turbine outlet temperature system.		
Chapter 76	**13.** Examine engine controls for condition and security.		
	14. Make sure of the operation of engine N_1 control as follows:		
	a. Make sure of proper throttle friction.		
	b. Examine freedom of full throttle grip travel and idle release operation. Return to closed position. Examine copilot throttle if installed.		
	c. Make sure fuel control stop lever contact with minimum and maximum stops before throttle grip reaches travel limit.		
	NOTE If dual controls are installed, it is permissible for pointer to be 0.06 inch (1.5 mm) below 40° mark (0.078 inch (1.98 mm) for 206L1 Engine Upgrade and 206L1+ IGW Upgrade), when copilot twist grip is used.		
	d. Turn throttle grip to idle detent, fuel control pointer should be no more than 0.01 inch (0.3 mm) below the 40° mark on the quadrant.		
	e. Make sure that the control linkage does not have excessive looseness, lost motion, and binding.		
	15. Make sure of the operation of engine N_2 control as follows:		

PROGRESSIVE INSPECTIONS

5-23. 300-HOUR AIRFRAME PROGRESSIVE INSPECTION — EVENT NO. 3 (CONT)

DATA REFERENCE	INSPECTION TASK DESCRIPTION	INITIAL MECH	INITIAL OTHER
	a. Position N_2 governor actuator to full DECREASE (extended).		
	b. Lift collective stick full up.		
	c. Position N_2 governor actuator to full INCREASE (retracted).		
	d. Verify for clearance between governor stop and lever stop arm.		
	e. Lower collective stick full down.		
	f. Position N_2 governor actuator to full DECREASE (extended).		
	g. Verify for clearance between governor stop and lever stop arm.		
Chapter 71	**h.** Verify control linkage for excessive looseness, lost motion, and binding.		
Chapter 71 Chapter 12	**16.** Examine N_1 and N_2 tachometer generator shaft splines and gearbox adapter splines for condition. Clean and lubricate shaft splines.		
	FUEL SYSTEM		
Chapter 28	**1.** Inspect airframe fuel filter head as follows:		
	NOTE The following step does not apply to helicopters equipped with fuel filter assembly 222-366-621-103.		
	a. Remove outlet port fitting from filter head.		
	b. Pass a 0.020 inch (0.50 mm) wire through the bleed hole in outlet port side of filter head to ensure hole is not obstructed.		
	2. Replace airframe fuel filter element.		
Chapter 28	**3.** Purge airframe and engine fuel system as follows:		

PROGRESSIVE INSPECTIONS

5-23. 300-HOUR AIRFRAME PROGRESSIVE INSPECTION — EVENT NO. 3 (CONT)

DATA REFERENCE	INSPECTION TASK DESCRIPTION	INITIAL MECH	INITIAL OTHER
	a. Turn both fuel boost pumps ON.		
	b. Depress airframe fuel filter bypass valve “press to test” button on fuel filter head until there is no evidence of air coming out the lower fuel filter drain port and out of the fuel filter outlet supply line.		
Rolls-Royce 250-C28 Series Operation and Maintenance Manual, 16W2 (Rolls-Royce 250-C30P Operation and Maintenance Manual, 14W2 for 206L1 Engine Upgrade and 206L1+ IGW Upgrade)	**c.** Then proceed with Rolls-Royce engine fuel system purging procedure.		
	4. Ensure air is purged from fuel filter head and check for fuel leaks during ground run.		
	STARTER GENERATOR		
Chapter 71	**1.** Remove starter generator. Examine mounting pad and clamp for condition.		
Chapter 96	**2.** Examine commutator for wear. Replace starter generator if not smooth and bright or if showing excessive wear.		
	3. Inspect brushes for wear.		
Chapter 71	**4.** Examine cooling duct and retention clamp for condition and security.		
	5. Examine the splines on starter generator shaft and engine gear shaft.		
	DRIVETRAIN		
Chapter 66	**1.** Examine freewheel assembly for condition leaks and security.		

PROGRESSIVE INSPECTIONS

5-23. 300-HOUR AIRFRAME PROGRESSIVE INSPECTION — EVENT NO. 3 (CONT)

DATA REFERENCE	INSPECTION TASK DESCRIPTION	INITIAL MECH	INITIAL OTHER
Chapter 66 Chapter 96	**2.** Examine the freewheel unit chip detector for accumulated material. Perform operational check of freewheel unit chip detector. (Refer to transmission chip detector caution system.)		
Chapter 66	**3.** Examine forward short shaft (steel) disc pack couplings for condition and security.		
	4. Examine forward short shaft (steel) splined adapters for wear.		
Chapter 12	**5.** Lubricate forward short shaft (steel) splined adapters.		
Chapter 66	**6.** Torque check forward short shaft disc pack coupling fasteners 50 to 70 inch-pounds (5.7 to 7.9 Nm). For 206L1 + IGW Upgrade helicopters, torque check forward short shaft disc pack coupling fasteners 150 to 180 inch-pounds (16.9 to 20.3 Nm).		
Chapter 96	**ELECTRICAL**		
	1. Examine all electrical components, wires, cables, and connectors in the power plant area for chafing, general condition, and security.		
	2. Verify illumination of airframe fuel filter caution light by depressing differential switch “press to test” button on filter head.		
	GROUND RUN		
	CAUTION GROUND RUN OF HELICOPTER TO BE ACCOMPLISHED BY QUALIFIED PERSONNEL ONLY.		
Chapter 12	**1.** Make sure applicable servicing requirements have been carried out.		
	2. Check oil level of transmission, hydraulic tank, engine and rail rotor gearbox prior to running helicopter.		

PROGRESSIVE INSPECTIONS

5-23. 300-HOUR AIRFRAME PROGRESSIVE INSPECTION — EVENT NO. 3 (CONT)

DATA REFERENCE	INSPECTION TASK DESCRIPTION	INITIAL MECH	INITIAL OTHER
	3. Make sure that helicopter is ready for ground run and that surrounding area is clear.		
BHT-206L1-FM-1 (BHT-206L3-FM-1 for 206L1 Engine Upgrade and BHT-206L4-FM-1 for 206L1+ IGW Upgrade helicopters)	**4.** Start the helicopter and conduct ground run at 100% N_R for a minimum of 2 minutes to check for leaks and ensure all systems are operational and parameters are within Flight Manual limitations.		

PROGRESSIVE INSPECTIONS

5-24. 300-HOUR AIRFRAME PROGRESSIVE INSPECTION — EVENT NO. 4

DATA REFERENCE	INSPECTION TASK DESCRIPTION	INITIAL MECH	INITIAL OTHER
	DATE: _____ **W.O.** _____		
	FACILITY: _____		
	HELICOPTER S/N: _____		
	REGISTRY NO.: _____		
	TOTAL TIME: _____		
	SIGNATURE: _____		
	ZONE 5 — AFT TOP DECK		
	PLACARDS AND MARKINGS		
Chapter 11	**1.** Examine the placards, decals and markings. Ensure they are readable, correctly applied and in agreement with the applicable configuration of your helicopter.		
	AIRFRAME (AFT TOP DECK)		
Chapter 71	**1.** Remove and examine aft fairing and attachment fasteners for condition and security.		
	2. Examine fairing retainer for condition.		
	3. Examine exterior of aft deck structure for condition.		
	OIL SYSTEM		
Chapter 79	**1.** Examine oil cooler area for evidence of oil leaks. Examine oil cooler pan for cleanliness and make sure the drain is not blocked.		
	2. Examine all flexible and rigid fluid lines for condition and security.		
	a. Pay particular attention for chafing damage and kinked lines.		

PROGRESSIVE INSPECTIONS

5-24. 300-HOUR AIRFRAME PROGRESSIVE INSPECTION — EVENT NO. 4 (CONT)

DATA REFERENCE	INSPECTION TASK DESCRIPTION	INITIAL MECH	INITIAL OTHER
	3. Examine oil cooler core for obstructions and cleanliness.		
Chapter 66	**4.** Examine oil cooler blower and housing for cleanliness, condition and security.		
Chapter 79	**5.** Examine oil tank for leakage, condition and security. Check oil for contamination.		
	6. Examine oil tank supports for condition and security.		
Chapter 71	**7.** Examine the oil cooler seals bonded inside the aft fairing for condition.		
	8. Examine external scavenge oil filter system (STC) (if installed) for condition and security.		
	DRIVETRAIN		
Chapter 66	**1.** Examine the blower impeller for condition.		
BHT-ALL-SPM, Chapter 6	**2.** Using dye penetrant methods, inspect oil cooler blower impeller 206-061-432-031 for cracks. Give particular attention to the mounting flange where individual blades attach.		
	3. Examine oil cooler blower impeller shaft for condition.		
	4. Examine oil cooler blower hanger bearings and brackets for grease leakage and evidence of overheating.		
	5. Lubricate oil cooler blower hanger bearings.		
Chapter 12 Chapter 66	**6.** Examine aft short shaft (aluminium) for condition and security.		
	7. Examine aft short shaft (aluminium) splined adapter for wear.		
Chapter 12	**8.** Lubricate aft short shaft (aluminum) splined adapter.		
Chapter 66	**9.** Torque check disc pack coupling fasteners 50 to 70 inch-pounds (5.7 to 7.9 Nm).		

PROGRESSIVE INSPECTIONS

5-24. 300-HOUR AIRFRAME PROGRESSIVE INSPECTION — EVENT NO. 4 (CONT)

DATA REFERENCE	INSPECTION TASK DESCRIPTION	INITIAL MECH	INITIAL OTHER
Chapter 96	**ELECTRICAL** **1.** Examine all electrical components, wires, cables, and connectors in the area of the aft deck for chafing, and general condition and security.		
	ZONE 6 — TAILBOOM		
Chapter 11	**PLACARDS AND MARKINGS** **1.** Examine the placards, decals and markings. Ensure they are readable, correctly applied and in agreement with the applicable configuration of your helicopter.		
Chapter 53	**TAILBOOM STRUCTURE** **1.** Remove and examine tail rotor driveshaft cover, and fasteners for condition and security. **2.** Remove and examine tail rotor gearbox fairings for condition. **3.** Examine anti-chafing adhesive tape (C-460) on tailboom for condition. Replace worn or damaged tape as required. **NOTE** In the event that cracks are found, contact Bell Helicopter Textron, Product Support Engineering. **4.** Examine entire tailboom for the following conditions: **a.** Dents. **NOTE** Pay particular attention to the upper left side tailboom quadrant. **b.** Cracks. **c.** Deformation.		

PROGRESSIVE INSPECTIONS

5-24. 300-HOUR AIRFRAME PROGRESSIVE INSPECTION — EVENT NO. 4 (CONT)

DATA REFERENCE	INSPECTION TASK DESCRIPTION	INITIAL MECH	INITIAL OTHER
	NOTE Pay particular attention to the rivets attaching the tail rotor gearbox support to the tailboom.		
BHT-206-SRM Chapter 53	**d.** Loose rivets. Replace as required. **e.** Chafing. **f.** Waviness.		
	5. Examine drive shaft cover clips for condition and security. Inspect all clip edges for integrity of sealant. Reseal as required.		
	6. As applicable to tailbooms modified in accordance with ASB 206L-99-115, inspect doubler around stabilizer of left side for integrity of sealant. Reseal as required.		
	7. Examine horizontal stabilizer for condition and security. Verify security of all attachment bolts.		
	8. Examine elevators for condition, security, and side play.		
	9. Examine auxiliary finlets for condition and security.		
	10. Examine vertical fin assembly for condition and security.		
	11. Inspect the vertical fin attachment support for condition and damage. Pay particular attention to the vertical fin attachment points.		
	12. Examine for open tailboom drains on lower tailboom skin and clear any obstructions.		
	13. Inspect antennas for damage and security.		
Chapter 32	**14.** Examine tailskid for condition, security and signs of ground contact.		
	TAIL ROTOR DRIVESHAFTS		
Chapter 66	**1.** Examine tail rotor driveshaft hanger bearings for excessive grease leakage and evidence of overheating.		

PROGRESSIVE INSPECTIONS

5-24. 300-HOUR AIRFRAME PROGRESSIVE INSPECTION — EVENT NO. 4 (CONT)

DATA REFERENCE	INSPECTION TASK DESCRIPTION	INITIAL MECH	INITIAL OTHER
Chapter 12	**2.** Lubricate tail rotor driveshaft hanger bearings.		
	3. Examine and lubricate the aft tail rotor driveshaft splined adapter.		
Chapter 66	**4.** Examine segmented driveshafts and aft splined adapter for condition and security. Check splined adapters for adequate lubrication and freedom of movement.		
	5. Torque check disc pack coupling fasteners 50 to 70 inch-pounds (5.7 to 7.9 Nm).		
	TAIL ROTOR GEARBOX		
Chapter 53	**1.** Examine tail rotor gearbox support for condition and security. Pay particular attention for cracks at the gearbox attachment holes.		
Chapter 66	**2.** Examine tail rotor gearbox for oil leaks, condition and security.		
	3. Examine gearbox oil for evidence of contamination.		
	4. Examine tail rotor output shaft for condition.		
	5. Torque check tail rotor gearbox retaining nuts 50 to 70 inch-pounds (5.6 to 7.9 Nm).		
	6. Examine the tail rotor gearbox chip detector for accumulated material.		
Chapter 96	**7.** Perform operational check of the tail rotor gearbox chip detector.		
Chapter 27	**TAIL ROTOR PITCH CHANGE CONTROLS**		
	1. Examine the tail rotor pitch control mechanism for freedom of travel throughout range and for condition and security.		
	2. Examine the following tail rotor pitch change components:		
	a. Boot for condition, security, and evidence of grease or oil leakage.		

PROGRESSIVE INSPECTIONS

5-24. 300-HOUR AIRFRAME PROGRESSIVE INSPECTION — EVENT NO. 4 (CONT)

DATA REFERENCE	INSPECTION TASK DESCRIPTION	INITIAL MECH	INITIAL OTHER
	b. Lower control mechanism rod for condition of bearings.		
	c. Pitch links and spherical bearings for condition and security.		
	d. Crosshead for condition and security.		
	e. Knurled nut for condition and security and liner for excessive play.		
Chapter 96	**ELECTRICAL**		
	1. Examine all visible electrical components, wires, cables, and connectors in the area of the tailboom for chafing, and general condition and security.		
	2. Verify navigation lights and anti-collision light for operation, condition, and security.		
Chapter 97	**3.** Examine antennas for condition and security.		
	GROUND RUN		
	CAUTION GROUND RUN OF HELICOPTER TO BE ACCOMPLISHED BY QUALIFIED PERSONNEL ONLY.		
Chapter 12	**1.** Make sure applicable servicing requirements have been carried out.		
	2. Check oil level of transmission, hydraulic tank, engine and rail rotor gearbox prior to running helicopter.		
	3. Make sure that helicopter is ready for ground run and that surrounding area is clear.		

PROGRESSIVE INSPECTIONS

5-24. 300-HOUR AIRFRAME PROGRESSIVE INSPECTION — EVENT NO. 4 (CONT)

DATA REFERENCE	INSPECTION TASK DESCRIPTION	INITIAL MECH	INITIAL OTHER
BHT-206L1-FM-1 (BHT-206L3-FM-1 for 206L1 Engine Upgrade and BHT-206L4-FM-1 for 206L1+ IGW Upgrade helicopters)	**4.** Start the helicopter and conduct ground run at 100% N_R to check for leaks and ensure all systems are operational and parameters are within Flight Manual limitations.		

PROGRESSIVE INSPECTIONS

5-25. 300-HOUR AIRFRAME PROGRESSIVE INSPECTION — EVENT NO. 5

DATA REFERENCE	INSPECTION TASK DESCRIPTION	INITIAL MECH	INITIAL OTHER
	DATE: _____ **W.O.** _____		
	FACILITY: _____		
	HELICOPTER S/N: _____		
	REGISTRY NO.: _____		
	TOTAL TIME: _____		
	SIGNATURE: _____		
	ZONE 7 — CABIN INTERIOR		
Chapter 11	**PLACARDS AND MARKINGS**		
	1. Examine the placards, decals and markings. Ensure they are readable, correctly applied and in agreement with the applicable configuration of your helicopter.		
BHT-206L1-FM-1 (BHT-206L3-FM-1 for 206L1 Engine Upgrade and BHT-206L4-FM-1 for 206L1+ IGW Upgrade helicopters)	**INSTRUMENTS**		
	1. Examine instruments and instrument panel for condition, security and for correct markings.		
	AIRFRAME		
Chapter 25	**1.** Remove cabin overhead upholstery, hat bin, soundproofing blanket, aft vertical tunnel covers, and roll-over bulkhead access panels.		
Chapter 53	**2.** Remove roof beam access panels.		
Chapter 27	**3.** Examine flight control tubes inside roof beam for condition and security.		

PROGRESSIVE INSPECTIONS

5-25. 300-HOUR AIRFRAME PROGRESSIVE INSPECTION — EVENT NO. 5 (CONT)

DATA REFERENCE	INSPECTION TASK DESCRIPTION	INITIAL MECH	INITIAL OTHER
Chapter 53	**4.** Examine roof beam and roof shell structure for condition.		
	5. Examine aft passenger seat bulkhead for distortion and/or cracks and indication of screw contact in the area of hat bin attachment nutplates.		
Chapter 96	**6.** Examine electrical components behind hat bin for condition, security, and cleanliness.		
Chapter 53	**7.** Examine engine and transmission support structure for cracks, corrosion, or loose fasteners.		
	CAUTION EXERCISE CARE AND USE ADEQUATE SCREW LENGTH WHEN REINSTALLING VERTICAL TUNNEL COVER TO AVOID CONTACT WITH TAIL ROTOR CONTROL TUBE.		
	8. In the vertical tunnel area, examine the following:		
Chapter 27	**a.** Flight control system tubes for evidence of chafing with oil line or flex cable.		
	b. Flight control system bellcranks, levers, supports, and walking beams for binding, excessive looseness, and security of attachment.		
Chapter 95	**c.** Oil lines for leakage, condition, and security.		
Chapter 53	**d.** Roof beam interface with vertical tunnel for cracks, corrosion, and loose fasteners.		
	e. Vertical tunnel stiffening angles at roof beam interface for cracks, condition, and loose fasteners.		
Chapter 25 and Chapter 53	**9.** Remove crew seat cushions and panels and examine the following:		

PROGRESSIVE INSPECTIONS

5-25. 300-HOUR AIRFRAME PROGRESSIVE INSPECTION — EVENT NO. 5 (CONT)

DATA REFERENCE	INSPECTION TASK DESCRIPTION	INITIAL MECH	INITIAL OTHER
Chapter 27 and Chapter 76	**a.** Control tubes, N_1 throttle cable, bellcranks, levers, yokes, and supports for bending, excessive looseness, and security of attachment.		
Applicable Service Instruction	**b.** Heater ducts (if installed) for chafing with controls.		
Chapter 95	**c.** Oil lines for leakage and general condition.		
Chapter 96	**d.** Wiring and electrical components for condition and security.		
Chapter 53	**e.** Structure for corrosion, cracks, and condition.		
	EQUIPMENT AND FURNISHINGS		
Chapter 53	**1.** Examine the cabin floor for condition.		
Chapter 25	**2.** Examine the seat assemblies for condition and security.		
IL GEN-05-103	**3.** Examine passenger and crew restraints and webbing for condition and security.		
	4. Verify operation of passenger and crew inertia reels and belt buckles. Pull promptly on each reel to confirm the proper activation of the reel locking mechanism.		
	5. Examine the interior trim for condition and security.		
Chapter 56	**6.** Verify sliding windows for safety and smoothness of sliding.		
Chapter 21	**7.** Examine the ventilation system for condition and security.		
	8. Verify nose vents for proper operation, absence of obstructions or debris, and open drains.		
Chapter 95	**9.** Verify for proper operation of the fuel valve switch guard.		
Chapter 26	**10.** Inspect cabin fire extinguisher for condition, security and proper charge.		
Chapter 21	**11.** Verify proper operation of ventilation inlet control cables.		

PROGRESSIVE INSPECTIONS

5-25. 300-HOUR AIRFRAME PROGRESSIVE INSPECTION — EVENT NO. 5 (CONT)

DATA REFERENCE	INSPECTION TASK DESCRIPTION	INITIAL MECH	INITIAL OTHER
	12. Examine first aid kit, replace missing or out of date items.		
Chapter 27	**CONTROLS**		
	1. Examine the collective control stick for condition and security and minimum friction. Examine copilot collective control stick if installed.		
	2. Examine the cyclic control stick for condition and security and minimum friction. Examine copilot cyclic control stick if installed.		
	3. Examine the anti-torque control pedals for condition and security and minimum friction. Examine copilot anti-torque control pedals if installed.		
Chapter 96	**ELECTRICAL**		
	1. Verify operation of cockpit map reading light.		
	2. Verify operation of aft cabin reading lights (if installed).		
	CAUTION USE EXTREME CARE WHEN IN PROXIMITY OF PITOT TUBE WITH HEAT APPLIED, TOUCHING TUBE MAY RESULT IN SERIOUS BURNS.		
	3. Verify operation of the pitot tube heating system.		
	4. Verify operation of defog blowers.		
	5. Verify operation of ENGINE OUT and LOW ROTOR RPM audio and mute switch (if installed).		
	6. Verify illumination of all caution panel annunciator light segments by depressing test switch, or each individual light segment, as applicable.		
	7. Verify instrument lighting and dimming capabilities.		

PROGRESSIVE INSPECTIONS

5-25. 300-HOUR AIRFRAME PROGRESSIVE INSPECTION — EVENT NO. 5 (CONT)

DATA REFERENCE	INSPECTION TASK DESCRIPTION	INITIAL MECH	INITIAL OTHER
	ZONE 8 — FORWARD FUSELAGE		
	PLACARDS AND MARKINGS		
Chapter 11	**1.** Examine the placards, decals and markings. Ensure they are readable, correctly applied and in agreement with the applicable configuration of your helicopter.		
	FUSELAGE		
Chapter 53	**1.** Examine forward fuselage for condition.		
Chapter 52	**2.** Examine all cabin doors for condition and security. Give special attention to the following **a.** Hinges **b.** Seals **c.** Latches for proper adjustment, positive locking, and wear **d.** Windows **e.** Handles		
Chapter 95	**3.** Drain moisture from pitot and static piping installation.		
Chapter 53	**4.** Examine the external power door and receptacle for condition and security.		
	5. Examine battery compartment door, door seal and attachment for condition and security.		
Chapter 52	**6.** Examine components in battery compartment for condition and security.		
Chapter 32	**7.** Examine cabin entry steps (if installed) for condition and security.		
Chapter 52	**8.** Examine windshields and skylights for condition.		
Chapter 53	**9.** Examine upper fuselage for evidence of water leaks.		

PROGRESSIVE INSPECTIONS

5-25. 300-HOUR AIRFRAME PROGRESSIVE INSPECTION — EVENT NO. 5 (CONT)

DATA REFERENCE	INSPECTION TASK DESCRIPTION	INITIAL MECH	INITIAL OTHER
	10. Examine lower fuselage for indication of fuel leaks, dents, cracks, corrosion, delamination, loose or missing rivets, and condition.		
	11. Examine all fuselage sealant joints for condition. Restore sealant as necessary.		
Chapter 96 and Chapter 97	**ELECTRICAL AND AVIONICS**		
	1. Examine all visible electrical components, wires, cables, and connectors in the area of the forward fuselage for chafing, and general condition and security.		
	2. Remove battery and recondition in accordance with BHT-ALL-SPM and manufacturer's service manual.		
	3. Examine battery vent tubes for obstruction or damage.		
	4. Perform operational test of the battery temperature indicating system.		
	5. If battery was removed, clean mounting area prior to installing serviceable battery.		
	6. Verify operation of litter door open warning light.		
	7. Verify operation of landing lights.		
	8. Verify operation of lower fuselage mounted position lights (if installed).		
	9. Examine antennas for condition and security.		
	GROUND RUN		
	CAUTION GROUND RUN OF HELICOPTER TO BE ACCOMPLISHED BY QUALIFIED PERSONNEL ONLY.		

PROGRESSIVE INSPECTIONS

5-25. 300-HOUR AIRFRAME PROGRESSIVE INSPECTION — EVENT NO. 5 (CONT)

DATA REFERENCE	INSPECTION TASK DESCRIPTION	INITIAL MECH	INITIAL OTHER
Chapter 12	**1.** Make sure applicable servicing requirements have been carried out.		
	2. Check oil level of transmission, hydraulic tank, engine and rail rotor gearbox prior to running helicopter.		
	3. Make sure that helicopter is ready for ground run and that surrounding area is clear.		
BHT-206L1-FM-1 (BHT-206L3-FM-1 for 206L1 Engine Upgrade and BHT-206L4-FM-1 for 206L1+ IGW Upgrade helicopters)	**4.** Start the helicopter and conduct ground run at 100% N_R to check for leaks and ensure all systems are operational and parameters are within Flight Manual limitations.		
Chapter 96	**5.** Check the voltage regulator setting. Adjust as required.		

PROGRESSIVE INSPECTIONS

5-26. 300-HOUR AIRFRAME PROGRESSIVE INSPECTION — EVENT NO. 6

DATA REFERENCE	INSPECTION TASK DESCRIPTION	INITIAL MECH	INITIAL OTHER
	DATE: _____ **W.O.** _____		
	FACILITY: _____		
	HELICOPTER S/N: _____		
	REGISTRY NO.: _____		
	TOTAL TIME: _____		
	SIGNATURE: _____		
	ZONE 9 — AFT FUSELAGE		
	PLACARDS AND MARKINGS		
Chapter 11	**1.** Examine the placards, decals and markings. Make sure they are readable, correctly applied and in agreement with the applicable configuration of your helicopter.		
	FUSELAGE (EXTERIOR)		
Chapter 53	**1.** Examine aft fuselage for dents, cracks, corrosion, delamination, loose or missing rivets and condition.		
	2. Examine aft fuselage for indications of fuel or oil leaks.		
Chapter 28	**3.** Examine the fuel cap for condition and security.		
Chapter 96	**4.** Examine the grounding plug for condition.		
Chapter 6 and Chapter 53	**5.** Examine all fuselage drains for condition and freedom from obstructions.		
Applicable Service Instruction	**6.** Examine heater and/or air conditioning inlets and outlets for cleanliness and absence of obstructions, (if installed).		
Chapter 53	**7.** Examine baggage compartment door, seal, and latches for operation, condition, and security.		

PROGRESSIVE INSPECTIONS

5-26. 300-HOUR AIRFRAME PROGRESSIVE INSPECTION — EVENT NO. 6 (CONT)

DATA REFERENCE	INSPECTION TASK DESCRIPTION	INITIAL MECH	INITIAL OTHER
Chapter 96	**8.** Verify operation of the baggage door ajar caution light, (if installed).		
	FUSELAGE (INTERIOR)		
Chapter 53	**1.** Examine baggage compartment for condition.		
	2. Gain access to inside of aft fuselage through access panels in baggage compartment and access panel located on the aft right hand fuselage:		
	a. Examine access panels and fasteners for condition.		
	b. Examine under engine pan for fuel, oil or water leaks.		
	c. Examine drain lines for condition and security.		
	d. Examine interface between longerons and engine pan structure for cracks, corrosion, distortion and loose fasteners.		
	e. Inspect engine mount attachment structure for condition.		
	3. Remove fuel shutoff valve access panel.		
	a. Examine structure for cracks and corrosion.		
Chapter 28	**b.** Examine fuel system components for leaks and general condition.		
Chapter 96	**c.** Examine wires and connectors for condition.		
	CONTROLS		
Chapter 27	**1.** Examine the anti-torque control system components for condition and security.		
	2. Examine the stabilizer elevator control system components for condition and security.		

PROGRESSIVE INSPECTIONS

5-26. 300-HOUR AIRFRAME PROGRESSIVE INSPECTION — EVENT NO. 6 (CONT)

DATA REFERENCE	INSPECTION TASK DESCRIPTION	INITIAL MECH	INITIAL OTHER
Chapter 96 and Chapter 97	**ELECTRICAL AND AVIONICS**		
	1. Examine antennas for condition and security.		
	2. Examine all components, electrical wiring, cables, and connectors for chafing, general condition, and security.		
	3. Examine all optional equipment installed in the aft fuselage area for condition and security.		
	4. Verify proper operation of fuel sump drain valve switch.		
	ZONE 10 — LANDING GEAR		
Chapter 11	**PLACARDS AND MARKINGS**		
	1. Examine the placards, decals and markings. Ensure they are readable, correctly applied and in agreement with the applicable configuration of your helicopter.		
Chapter 32	**CROSSTUBES**		
	1. Examine crosstube retaining straps, cushions, and attaching hardware for condition and security.		
	2. Examine fuselage attachment fittings for condition and security.		
	3. Examine electrical bonding strips (if installed) for condition and security.		
	4. Examine fairings (if installed) for condition and security.		
	5. Examine crosstube riveted or clamped supports for condition and security. Give particular attention to the sealant joints around supports. Restore sealant (C-251) and paint finish as required.		
	6. Examine crosstubes for corrosion and damage. Give particular attention to areas where equipment is mounted. Repair and/or restore surface protection as required.		

PROGRESSIVE INSPECTIONS

5-26. 300-HOUR AIRFRAME PROGRESSIVE INSPECTION — EVENT NO. 6 (CONT)

DATA REFERENCE	INSPECTION TASK DESCRIPTION	INITIAL MECH	INITIAL OTHER
	7. Examine cabin entry steps for condition and security (if installed).		
	8. Examine sealant joint at junction with skid tube saddles. Restore sealant (C-251) and paint finish as required.		
Chapter 32	**SKID TUBES**		
	1. Examine skid tubes for corrosion, damage, and security.		
	2. Examine skid shoes for condition and security.		
	3. Examine skid tube saddles for corrosion, damage, and security.		
	4. Examine ground handling wheel attachment bolts for condition and security.		
	GROUND RUN		
	CAUTION GROUND RUN OF HELICOPTER TO BE ACCOMPLISHED BY QUALIFIED PERSONNEL ONLY.		
Chapter 12	**1.** Make sure applicable servicing requirements have been carried out.		
	2. Check oil level of transmission, hydraulic tank, engine and rail rotor gearbox prior to running helicopter.		
	3. Make sure that helicopter is ready for ground run and that surrounding area is clear.		
BHT-206L1-FM-1 (BHT-206L3-FM-1 for 206L1 Engine Upgrade and BHT-206L4-FM-1 for 206L1+ IGW Upgrade helicopters)	**4.** Start the helicopter and conduct ground run at 100% N_R to check for leaks and ensure all systems are operational and parameters are within Flight Manual limitations.		

PERIODIC INSPECTION

5-27. 300-HOUR AIRFRAME PERIODIC INSPECTION

DATA REFERENCE	INSPECTION TASK DESCRIPTION	INITIAL MUCH	INITIAL OTHER
	DATE: _____ **W.O.** _____ **FACILITY:** _____ **HELICOPTER S/N:** _____ **REGISTRY NO.:** _____ **TOTAL TIME:** _____ **SIGNATURE:** _____		
Chapter 5 Paragraph 5-21 through paragraph 5-26	**1.** Do this inspection every 300 hours of operation or every 12 calendar months. **2.** Do all six events of the 300-hour progressive inspection.		

SCHEDULED INSPECTIONS

5-28. 100-HOUR INSPECTION

DATA REFERENCE	INSPECTION TASK DESCRIPTION	INITIAL MECH	INITIAL OTHER
	DATE: _____ **W.O.** _____ **FACILITY:** _____ **HELICOPTER S/N:** _____ **REGISTRY NO.:** _____ **TOTAL TIME:** _____ **SIGNATURE:** _____		
	NOTE 100-hour inspection must be accomplished when using the 300-hour airframe progressive inspection program or the 300-hour airframe periodic inspection program.		
Chapter 65	**MAIN ROTOR**		
	1. Torque check pillow block retention hardware 84 to 107 inch-pounds (9.4 to 12 Nm). Examine for misalignment of anti-slippage marks.		
Chapter 53	**TAILBOOM**		
	CAUTION ANY CRACK, CORROSION, OR LOOSE OR SHEARED RIVET IS CAUSE FOR IMMEDIATE GROUNDING OF THE HELICOPTER UNTIL THE PROBLEM IS CORRECTED.		
	2. Remove access panel on right side of aft fuselage.		

SCHEDULED INSPECTIONS

5-28. 100-HOUR INSPECTION (CONT)

DATA REFERENCE	INSPECTION TASK DESCRIPTION	INITIAL MECH	INITIAL OTHER
Chapter 4 and Chapter 53	**3.** Examine the four tailboom attachment fittings on fuselage aft bulkhead and tailboom forward bulkhead for cracks. Give special attention to the tailboom attachment fittings/intercostals and bolts, and to fasteners between the intercostal. Particular attention must be given to inspection of the upper left fitting (refer to Chapter 4, Inspection Limitations Schedule). **4.** Make sure the area is clean and visually examine all visible sections of the upper left longeron between aft fuselage frame at STA 204.92 and frame at STA 231.486 for general condition, corrosion, and cracks. **a.** If corrosion or a defect is found, submit details to Product Support Engineering for evaluation and possible repair. **NOTE** In the event that cracks are found during inspection of tailboom, contact Bell Helicopter Textron, Product Support Engineering. **5.** Examine tailbooms 206-033-004-045 and prior, modified in accordance with ASB 206L-87-47 as follows: **a.** Remove tail rotor driveshaft and gearbox fairings. Inspect for condition and attachment of fasteners. **b.** Remove a sufficient amount of anti-chafing tape to permit inspection of tailboom skin adjacent to tail rotor driveshaft cover retention clips aft of horizontal stabilizer, and in area of double row of rivets attaching tail rotor gearbox support fitting to tailboom (BS 174). **c.** Prior to cleaning, use a minimum 5X magnifying glass to inspect for cracks and signs of developing cracks at the following locations: **(1)** Aft of stabilizer assembly, around rivets, which attach tail rotor driveshaft cover retention clips to tailboom. **(2)** Area of tail rotor gearbox fairing attachment nutplate rivets.		

SCHEDULED INSPECTIONS

5-28. 100-HOUR INSPECTION (CONT)

DATA REFERENCE	INSPECTION TASK DESCRIPTION	INITIAL MECH	INITIAL OTHER
	(3) Area of double row of rivets, which attach tail rotor gearbox support fitting to tailboom (BS 174).		
	d. Clean entire tailboom taking particular care to remove all grime and dirt in specified area of inspection and perform inspection using minimum 5X magnifying glass.		
Chapter 53	**e.** Examine entire tailboom for cracks, dents, deformation, waviness, working rivets, and chafing between tailboom skin and fairing. Pay particular attention to rivets attaching the tail rotor gearbox support to the tailboom.		
BHT-206-SRM	**f.** Replace any loose or working rivets found.		
	g. Replace removed, damaged, or worn anti-chafing adhesive tape (C-460) as required.		
	h. Inspect doubler and clip edge sealant for integrity. Reseal as required.		
	i. As applicable to tailbooms modified in accordance with ASB 206L-99-115, examine doubler around stabilizer on left side for integrity of sealant. Reseal as required.		
	6. Inspect tailbooms P/N 206-033-004-143 and subsequent as follows:		
	a. Remove tail rotor driveshaft and gearbox fairings. Inspect for condition and attachment of fasteners.		
	b. Check anti-chafing adhesive tape (C-460) on tailboom for condition. Replace worn or damaged tape as required.		
	c. Inspect entire tailboom for cracks, dents, deformation, working rivets, and chafing between tailboom skin and fairing. Pay particular attention to rivets attaching the tail rotor gearbox support to the tailboom.		
BHT-206-SRM	**d.** Replace any loose or working rivets found.		
	e. Inspect all clip edges for integrity of sealant. Reseal as required.		

SCHEDULED INSPECTIONS

5-28. 100-HOUR INSPECTION (CONT)

DATA REFERENCE	INSPECTION TASK DESCRIPTION	INITIAL MECH	INITIAL OTHER
	f. As applicable to tailbooms modified in accordance with ASB 206L-99-115, examine doubler around stabilizer on left side for integrity of sealant. Reseal as required.		

SCHEDULED INSPECTIONS

5-29. 300-HOUR INSPECTION

DATA REFERENCE	INSPECTION TASK DESCRIPTION	INITIAL MECH	INITIAL OTHER
	DATE: _____ **W.O.** _____ **FACILITY:** _____ **HELICOPTER S/N:** _____ **REGISTRY NO.:** _____ **TOTAL TIME:** _____ **SIGNATURE:** _____		
	NOTE Every 300 hours of operation, the 300-hour inspection must be accomplished in conjunction with the 100-hour airframe progressive inspection program or the 100-hour airframe periodic inspection program.		
	FORWARD FUSELAGE		
	CABIN INTERIOR		
Chapter 25	**1.** Remove cabin overhead upholstery, hat bin, soundproofing blanket, aft vertical tunnel covers, and roll-over bulkhead access panels.		
Chapter 53	**2.** Remove roof beam access panels.		
Chapter 27	**3.** Examine flight control tubes inside roof beam for condition and security.		
Chapter 53	**4.** Examine roof beam and roof shell structure for condition.		
	5. Examine aft passenger seat bulkhead for distortion and/or cracks and indication of screw contact in the area of hat bin attachment nutplates.		

SCHEDULED INSPECTIONS

5-29. 300-HOUR INSPECTION (CONT)

DATA REFERENCE	INSPECTION TASK DESCRIPTION	INITIAL MECH	INITIAL OTHER
Chapter 96	**6.** Examine electrical components behind hat bin for condition, security, and cleanliness.		
Chapter 53	**7.** Examine engine and transmission support structure for cracks, corrosion, or loose fasteners.		
	CAUTION EXERCISE CARE AND USE ADEQUATE SCREW LENGTH WHEN REINSTALLING VERTICAL TUNNEL COVER TO AVOID CONTACT WITH TAIL ROTOR CONTROL TUBE.		
	8. In the vertical tunnel area, examine the following:		
Chapter 27	**a.** Flight control system tubes for evidence of chafing with oil line or flex cable.		
	b. Flight control system bellcranks, levers, supports, and walking beams for binding, excessive looseness, and security of attachment.		
Chapter 95	**c.** Oil lines for leakage, condition, and security.		
Chapter 53	**d.** Roof beam interface with vertical tunnel for cracks, corrosion, and loose fasteners.		
	e. Vertical tunnel stiffening angles at roof beam interface for cracks, condition, and loose fasteners.		
Chapter 25 and Chapter 53	**9.** Remove crew seat cushions and panels and examine the following:		
Chapter 27 and Chapter 76	**a.** Control tubes, N_1 throttle cable, bellcranks, levers, yokes, and supports for bending, excessive looseness, and security of attachment.		
Applicable Service Instruction	**b.** Heater ducts (if installed) for chafing with controls.		
Chapter 95	**c.** Oil lines for leakage and general condition.		

SCHEDULED INSPECTIONS

5-29. 300-HOUR INSPECTION (CONT)

DATA REFERENCE	INSPECTION TASK DESCRIPTION	INITIAL MECH	INITIAL OTHER
Chapter 96	**d.** Wiring and electrical components for condition and security.		
Chapter 53	**e.** Structure for corrosion, cracks, and condition.		
	CONTROLS		
Chapter 27	**1.** Verify minimum friction of collective control and readjust as required.		
	2. Verify minimum friction of cyclic control and readjust as required.		
	3. Verify minimum friction of control pedals and readjust as required.		
Chapter 96	**ELECTRICAL**		
	1. Remove battery and recondition in accordance with BHT-ALL-SPM and manufacturer's service manual.		
	FUSELAGE		
Chapter 52	**1.** Inspect latches on crew doors for correct adjustment.		
	2. Inspect latches on passenger doors, and baggage door for correct adjustment.		
	PYLON AREA		
	SWASHPLATE ASSEMBLY		
Chapter 65	**1.** Verify and adjust swashplate tilt friction as required.		
	2. Value must be between 15 to 32 pounds (67 to 142 N). If out of limits, adjust to 15 to 32 pounds (67 to 142 N) and check again.		

SCHEDULED INSPECTIONS

5-29. 300-HOUR INSPECTION (CONT)

DATA REFERENCE	INSPECTION TASK DESCRIPTION	INITIAL MECH	INITIAL OTHER
	HYDRAULIC		
Chapter 12 Chapter 29 Chapter 66	**1.** Remove hydraulic pump and rotor tachometer generator.		
	2. Examine hydraulic pump shaft splines and rotor tachometer splines for excessive wear.		
	3. Lubricate hydraulic pump shaft splines and rotor tachometer splines.		
	TRANSMISSION ASSEMBLY		
	1. Examine transmission oil pump splines for excessive wear.		
	POWER PLANT AREA		
	GENERAL		
Rolls-Royce 250-C28 Series Operation and Maintenance Manual, 16W2 (Rolls-Royce 250-C30P Operation and Maintenance Manual, 14W2 for 206L1 Engine Upgrade and 206L1+ IGW Upgrade)	**1.** Perform engine inspection per the applicable Rolls-Royce Operation and Maintenance Manual.		
Chapter 95	**2.** Perform operational check of turbine outlet temperature system.		
Chapter 95 and Chapter 12	**3.** Examine N_1 and N_2 tachometer generator shaft splines and gearbox adapter splines for condition. Clean and lubricate shaft splines.		
Chapter 28	**FUEL SYSTEM**		
	1. Inspect airframe fuel filter head as follows:		
	NOTE The following step does not apply to helicopters equipped with fuel filter assembly 222-366-621-103.		

SCHEDULED INSPECTIONS

5-29. 300-HOUR INSPECTION (CONT)

DATA REFERENCE	INSPECTION TASK DESCRIPTION	INITIAL MECH	INITIAL OTHER
	a. Remove outlet port fitting from filter head.		
	b. Pass a 0.020 inch (0.50 mm) wire through the bleed hole in outlet port side of filter head to ensure hole is not obstructed.		
	2. Replace airframe fuel filter element.		
Chapter 28	**3.** Purge airframe and engine fuel system as follows:		
	a. Turn both fuel boost pumps ON.		
	b. Depress airframe fuel filter bypass valve “press to test” button on fuel filter head until there is no evidence of air coming out of the lower fuel filter drain port and out of the fuel filter outlet supply line.		
Rolls-Royce 250-C28 Series Operation and Maintenance Manual, 16W2 (Rolls-Royce 250-C30P Operation and Maintenance Manual, 14W2 for 206L1 Engine Upgrade and 206L1+ IGW Upgrade)	**c.** Then proceed with Rolls-Royce engine fuel system purging procedure.		
	4. Ensure air is purged from fuel filter head and check for fuel leaks during ground run.		
	STARTER GENERATOR		
Chapter 71	**1.** Remove starter generator. Examine mounting pad and clamp for condition.		
Chapter 96	**2.** Examine commutator for wear. Replace starter generator if not smooth and bright or if showing excessive wear.		
	3. Inspect brushes for wear.		
Chapter 71	**4.** Examine cooling duct and retention clamp for condition and security.		

SCHEDULED INSPECTIONS

5-29. 300-HOUR INSPECTION (CONT)

DATA REFERENCE	INSPECTION TASK DESCRIPTION	INITIAL MECH	INITIAL OTHER
	5. Examine the splines on starter generator shaft and engine gear shaft.		
	AFT FUSELAGE/TAILBOOM AREA		
	AFT FUSELAGE		
	1. Visually inspect longeron and engine pan interface for corrosion as follows:		
	a. Open access door in overhead baggage compartment.		
	b. Open engine compartment cowling.		
	c. Using bright light and mirror, inspect exposed upper and lower edges of the joints and fastener between aluminum longeron and titanium engine pan. Edge of sealant coating should be visible. No indications of corrosion are acceptable.		
BHT-206-SRM-1	**d.** If there is no indication of corrosion and the bonded surface seal is present, replace access panel and close engine compartment cowling door. If corrosion is present or bonded surface seal is not present, refer to the BHT-206-SRM-1 for repair procedures.		
	e. Inspect engine mount attachment structures for cracks and condition.		
	f. Remove fuel shutoff valve access panel. Inspect area for corrosion, cracks, and fuel leaks. Check wiring and plumbing for security and condition.		
	g. Inspect aft passenger rear bulkhead for indication of screw contact or cracks in area of hat bin attachment anchor nuts.		
	2. Inspect aft passenger rear bulkhead for distortion in area of hat bin attachment anchor nuts.		
	DRIVETRAIN		
Chapter 66 and Chapter 12	**1.** Examine forward short shaft (steel) splined adapters for excessive wear and lubricate.		

SCHEDULED INSPECTIONS

5-29. 300-HOUR INSPECTION (CONT)

DATA REFERENCE	INSPECTION TASK DESCRIPTION	INITIAL MECH	INITIAL OTHER
BHT-ALL-SPM, Chapter 6	**2.** Using dye penetrant methods, inspect oil cooler blower impeller 206-061-432-031 for cracks. Give particular attention to the mounting flange where individual blades attach.		
	TAIL ROTOR DRIVESHAFT		
Chapter 66	**1.** Lubricate oil cooler blower and tail rotor driveshaft hanger bearings and check for evidence of overheating.		
Chapter 12	**2.** Examine and lubricate aft short shaft (aluminum) and aft tail rotor driveshaft splined adapters.		
Chapter 66	**TAIL ROTOR GEARBOX**		
	Torque check tail rotor gearbox retaining nuts 50 to 70 inch-pounds (5.6 to 7.9 Nm).		
	TAIL ROTOR HUB AND BLADE ASSEMBLY		
Chapter 65	**1.** Check dynamic balance of tail rotor hub and blade assembly.		
	2. Adjust as required.		

SCHEDULED INSPECTIONS

5-30. 1000-HOUR INSPECTION

DATA REFERENCE	INSPECTION TASK DESCRIPTION	INITIAL MECH	INITIAL OTHER
	DATE: _____ **W.O.** _____ **FACILITY:** _____ **HELICOPTER S/N:** _____ **REGISTRY NO.:** _____ **TOTAL TIME:** _____ **SIGNATURE:** _____		
ASB 206L-97-107	**TAILBOOM** **NOTE** This inspection is to be complied with in accordance with Part 1 of ASB 206L-97-107 every 1000 hours of tailboom operation, except as follows: The inspection is not required for tailbooms P/N 206-033-004-143 and subsequent, or earlier tailbooms, which have been modified by TB 206L-96-191, TB 206L-05-220, or in accordance with BHT-206-SRM, Section 6-3-4, with upper tailboom skin P/N 206-033-004-155 or subsequent installed. **1.** Complete eddy current inspection in accordance with Part 1 of ASB 206L-97-107.		

SCHEDULED INSPECTIONS

5-31. 1200-HOUR INSPECTION

DATA REFERENCE	INSPECTION TASK DESCRIPTION	INITIAL MECH	INITIAL OTHER
	DATE: _____ **W.O.** _____ **FACILITY:** _____ **HELICOPTER S/N:** _____ **REGISTRY NO.:** _____ **TOTAL TIME:** _____ **SIGNATURE:** _____		
	NOTE This inspection must be accomplished every 1200 flight hours.		
Chapter 27	**CYCLIC CONTROL STICK**		
Chapter 27	**1.** Open right crew door to gain access to pilot cyclic control stick. Remove cyclic control stick.		
BHT-206L-CR&O	**2.** Clean lower 4 inches of removed cyclic stick tube and inspect.		
	3. Visually inspect cyclic stick tube for cracks using a 3X magnifying glass. Pay particular attention to the area adjacent to the two slots in the tube where two bolts secure the tube when installed in the pivot lever assembly.		
BHT-206L-CR&O BHT-ALL-SPM	**4.** If a crack is suspected, remove paint and thoroughly inspect lower end of the cyclic stick tube for cracking using the fluorescent penetrant method.		
	5. If a crack is found, replace the cyclic stick tube with a serviceable tube.		

SCHEDULED INSPECTIONS

5-31. 1200-HOUR INSPECTION (CONT)

DATA REFERENCE	INSPECTION TASK DESCRIPTION	INITIAL MECH	INITIAL OTHER
	6. If no crack is found, inspect cyclic stick tube for mechanical and corrosion damage as follows: **a.** Damaged and repaired areas must be separated by 1.0 inch (25 mm) minimum. **b.** Mechanical damage is not to exceed 0.005 inch (0.127 mm) depth and 1/3 tube circumference. **c.** Corrosion damage is not to exceed 0.0025 inch (0.0635 mm) depth before and 0.005 inch (0.127 mm) after repair and 1/3 tube circumference. **d.** Condemn as unserviceable a tube that does not meet these criteria. **7.** Inspect bore of cyclic pivot lever assembly where stick tube is installed for mechanical and corrosion damage. Bore damage is not to exceed 0.002 inch (0.051 mm) for 1/4 of the circumference. Limit of one repair per bore. Repair or replace lever assembly as required. **8.** For cyclic stick tubes considered serviceable, polish out any acceptable damage using 400 to 600 grit abrasive paper (C-423). **9.** Thoroughly clean cyclic stick tube with water and mild detergent to completely remove residual penetrant and developer. Dry part completely.		
BHT-ALL-SPM	**10.** Apply chemical film material (C-100) to bare metal area.		
BHT-ALL-SPM	**11.** Touch up area with epoxy polyamide primer (C-204). Where finish paint coat is required, match to original finish using polyurethane coating (C-245).		
Chapter 27	**12.** Install cyclic control stick.		

SCHEDULED INSPECTIONS

5-31. 1200-HOUR INSPECTION (CONT)

DATA REFERENCE	INSPECTION TASK DESCRIPTION	INITIAL MECH	INITIAL OTHER
	TAILBOOM **NOTE** This inspection is to be complied with every 1200 hours of tailboom operation after compliance with ASB 206L-99-115, except as follows: The inspection is not required for tailbooms P/N 206-033-004-199 and subsequent P/N 206-704-727-101 P/N 206-704-727-103 P/N 206-704-727-105 All tailbooms upgraded per PSE letter and reidentified as an equivalent of 206-033-004-199. **1.** Prepare tailboom assembly for inspection by removing the following components: **a.** Auxiliary fin assembly. **b.** Slat assembly. **c.** Stabilizer and support. **2.** Gain access to inside of tailboom from right side. Using a bright light, perform inspection of skin on inside surface of left side of tailboom for cracks. **a.** Inspect skin in area where doubler is attached. **b.** Inspect each rivet location for signs of loose or working rivets and for cracks that start at rivet holes. **3.** Using a 10X magnifying glass perform a visual inspection of external left side of tailboom at doubler and skin around doubler in the following areas: **a.** Inspect internal edge of doubler for cracks. **b.** Inspect support attachment holes for cracks. **c.** Inspect each rivet location for loose or working rivets and cracks that start from rivet holes.		

SCHEDULED INSPECTIONS

5-31. 1200-HOUR INSPECTION (CONT)

DATA REFERENCE	INSPECTION TASK DESCRIPTION	INITIAL MECH	INITIAL OTHER
	d. Inspect edge of doubler for delamination between skin and doubler.		
	e. Inspect tailboom skin area up to a 1.00 inch (25.40 mm) area around doubler for cracks.		
	4. Using a 10X magnifying glass, perform a visual inspection of external right side of tailboom skin stabilizer cutout.		
	a. Inspect edge of cutout for cracks in skin.		
	b. Inspect support attachment holes for cracks in skin.		
	5. If a crack is detected in tailboom skin or doubler, contact Bell Helicopter Textron, Product Support Engineering as follows:		
	Bell Helicopter Textron, Product Support Engineering Light Helicopters		
	1-800-243-6407 (Continental USA and Canada) 1-800-363-8023 (Continental USA) 1-800-361-9305 (Canada) 1-450-437-2862 (All other areas) Fax: 1-450-433-0272 Internet: pselight@bellhelicopter.textron.com		
	TAIL ROTOR CONTROL TUBE WITH NYLATRON SLEEVES		
Chapter 27	**1.** Remove tail rotor control tube.		
	2. Inspect tail rotor control tube and nylatron sleeves at five areas where tube contacts fairleads and proceed as follows:		
	a. If nylatron sleeves are worn on one side only, but surface of control tube is unworn, tube may be rolled 180° and reinstalled.		
BHT-206L-CR&O	**b.** If nylatron sleeves were worn through, exposing bare surface of control tube, and control tube is worn not in excess of 0.004 inch on one side only, replace worn nylatron sleeves.		
	c. If control tube is worn greater than 0.004 inch at any point, or if wear extends more than halfway around tube regardless of depth, replace control tube.		

SCHEDULED INSPECTIONS

5-31. 1200-HOUR INSPECTION (CONT)

DATA REFERENCE	INSPECTION TASK DESCRIPTION	INITIAL MECH	INITIAL OTHER
	d. Inspect tube for corrosion. Pay particular attention to bond line at nylatron sleeves.		
Chapter 27	**3.** Install control tube in tailboom. Reinstall tail rotor gearbox fairing and access panel on right side of aft fuselage.		

SCHEDULED INSPECTIONS

5-32. AS REQUIRED BY MANUFACTURER

DATA REFERENCE	INSPECTION TASK DESCRIPTION	INITIAL MECH	INITIAL OTHER
	DATE: _____ W.O. _____ FACILITY: _____ HELICOPTER S/N: _____ REGISTRY NO.: _____ TOTAL TIME: _____ SIGNATURE: _____		
Rolls-Royce 250-C28 Series Operation and Maintenance Manual, 16W2 (Rolls-Royce 250-C30P Operation and Maintenance Manual, 14W2 for 206L1 Engine Upgrade and 206L1+ IGW Upgrade)	**ENGINE** Perform engine inspection requirements.		

SCHEDULED INSPECTIONS

5-33. WEEKLY INSPECTION

DATA REFERENCE	INSPECTION TASK DESCRIPTION	INITIAL MECH	INITIAL OTHER
	DATE: _____ **W.O.** _____ **FACILITY:** _____ **HELICOPTER S/N:** _____ **REGISTRY NO.:** _____ **TOTAL TIME:** _____ **SIGNATURE:** _____		
Chapter 65	**MAIN ROTOR HUB AND BLADES, AND TAIL ROTOR HUB AND BLADES** **NOTE** The following procedures shall be accomplished as frequently as deemed necessary when operating in rain, corrosive salt laden air, or other adverse environmental conditions. The following preventive maintenance procedures for the main rotor hub and blades and tail rotor hub and blades are recommended to prevent corrosion and extend their life. The inspection may be accomplished more frequently or may be extended beyond the weekly interval, as deemed necessary, based on the actual operating environment. **1.** Wipe hub and blades with drycleaning solvent (C-304). **2.** Wash hub and blades with cleaning compound (C-318). Rinse with water and dry with clean cloths. **3.** Inspect hub and blades for evidence of corrosion.		

SCHEDULED INSPECTIONS

5-33. WEEKLY INSPECTION (CONT)

DATA REFERENCE	INSPECTION TASK DESCRIPTION	INITIAL MECH	INITIAL OTHER
	NOTE Do not allow preservative oil (C-125) to contact tail rotor blade bearings. **4.** Apply a light coat of preservative oil (C-125) to all hub and blade surfaces. Flood areas between main rotor hub grip tangs and blades, latch bolts to grips, and yoke fillet areas just inboard of pitch horn to ensure complete coverage.		

SCHEDULED INSPECTIONS

5-34. 12-MONTH INSPECTION

DATA REFERENCE	INSPECTION TASK DESCRIPTION	INITIAL MECH	INITIAL OTHER
	DATE: _____ **W.O.** _____ **FACILITY:** _____ **HELICOPTER S/N:** _____ **REGISTRY NO.:** _____ **TOTAL TIME:** _____ **SIGNATURE:** _____		
	GENERAL **1.** Ensure that a 100 or 300-hour airframe progressive inspection (all four or six events, as applicable) or the 100 or 300-hour airframe periodic inspection has been completed in the last 12 calendar month period. **2.** Perform a dynamic balance of the main rotor hub and blade assembly		
Chapter 96	**FUEL SYSTEM** **1.** Check operation of low fuel caution system.		
	AIRFRAME Remove overhead upholstery, hat bin, soundproofing blanket, and access panels. Inspect engine and transmission support structure for cracks and corrosion.		

SCHEDULED INSPECTIONS

5-35. 12 MONTHS OF COMPONENT OPERATION

DATA REFERENCE	INSPECTION TASK DESCRIPTION	INITIAL MECH	INITIAL OTHER
	DATE: _____ **W.O.** _____ **FACILITY:** _____ **HELICOPTER S/N:** _____ **REGISTRY NO.:** _____ **TOTAL TIME:** _____ **SIGNATURE:** _____		
Chapter 65 BHT-206A/B/L-Series-CR&O	**MAIN ROTOR MAST** **1.** Inspect mast assembly as follows: **a.** Remove mast nut, flap restraint kit, and cap plug. With the help of a bright light, inspect internal surface (internal diameter) of mast for corrosion and condition of protective coating. **b.** Install cap plug, flap restraint kit, and mast nut. **2.** Check mast nut for torque after 1 to 5 hours of flight operation (TB 206L-07-223).		

SCHEDULED INSPECTIONS

5-36. 24-MONTH INSPECTION

DATA REFERENCE	INSPECTION TASK DESCRIPTION	INITIAL MECH	INITIAL OTHER
	DATE: _____ **W.O.** _____ **FACILITY:** _____ **HELICOPTER S/N:** _____ **REGISTRY NO.:** _____ **TOTAL TIME:** _____ **SIGNATURE:** _____ **MAIN ROTOR FLIGHT CONTROL BOLTS/NUTS** **1.** Remove main rotor flight control bolts/nuts (1 through 14, Figure 5-2). **2.** Clean bolts/nuts with MEK (C-309). Wipe dry. **3.** Visually inspect bolts/nuts for corrosion and thread damage. Replace any bolts/nuts that have damaged threads, detectable wear and/or corrosion pitting. **4.** Apply a coating of corrosion preventive compound (C-104) to all bolt shanks prior to installation. Do not apply corrosion preventive compound to bolt threads. **5.** Install flight control bolts and attaching hardware. Torque nuts and install new cotter pins. **6.** Apply a coating of corrosion preventive compound (C-101) to all bolt heads, washers, nuts, and exposed threads after installation. **NOTE** Operation in environmental conditions that erode corrosion preventive compound (C-101) may require periodic touch-up of corrosion preventive compound. Before touch-up, visually check exposed surfaces for evidence of corrosion. If corrosion is detected, accomplish step 1 through step 6.		

SCHEDULED INSPECTIONS

5-36. 24-MONTH INSPECTION (CONT)

DATA REFERENCE	INSPECTION TASK DESCRIPTION	INITIAL MECH	INITIAL OTHER
	FUEL SYSTEM		
Chapter 28	**1.** Remove fuel boost pump assemblies and inspect fuel cell interiors for debris, water contamination, and fungus growth.		
	2. Remove, clean, and inspect fuel manifold assembly.		
	3. Remove, clean, and inspect inline fuel filters and check valves.		

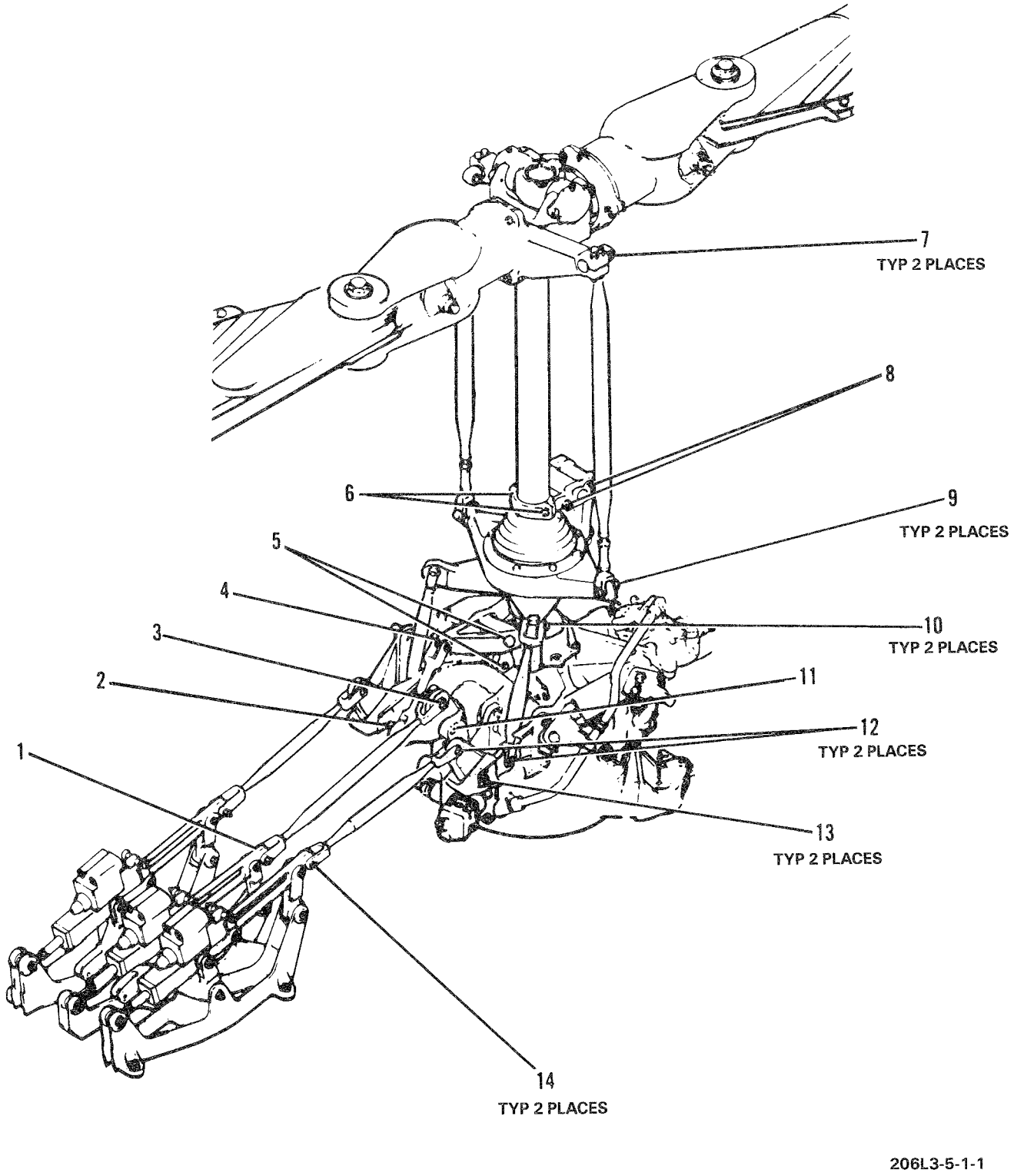

Figure 5-2. Flight Control System Bolts (Sheet 1 of 2)

		QTY
1.	Collective servo to control tube bolt	1
2.	Collective bellcrank to control link assembly bolt	1
3.	Control tube to collective bellcrank bolt	1
4.	Control link to collective lever assembly bolt	1
5.	Link assembly (collective lever to swashplate support) bolt	1
6.	Swashplate drive collar set bolts	2
7.	M/R pitch links to M/R hub pitch horn bolts	2
8.	Swashplate drive link/lever assembly bolts	2
9.	Swashplate to M/R pitch link bolts	2
10.	Cyclic control tubes to swashplate bolts	2
11.	Collective bellcrank pivot bolt	1
12.	Control tube to cyclic bellcrank bolts	4
13.	Cyclic bellcrank pivot bolts	2
14.	Cyclic servo to control tube bolts	2

206L3-5-1-2

Figure 5-2. Flight Control System Bolts (Sheet 2 of 2)

SCHEDULED INSPECTIONS

5-37. 60-MONTH INSPECTION

DATA REFERENCE	INSPECTION TASK DESCRIPTION	INITIAL MECH	INITIAL OTHER
	DATE: _____ **W.O.** _____ **FACILITY:** _____ **HELICOPTER S/N:** _____ **REGISTRY NO.:** _____ **TOTAL TIME:** _____ **SIGNATURE:** _____		
BHT-206L1-MM BHT-206L-CR&O	**FREEWHEEL ASSEMBLY** **NOTE** This inspection applies to 206L1+ IGW Upgrade helicopters equipped with freewheel assembly 406-040-500-143 (or subsequent). Do this inspection if an overhaul of the applicable freewheel assembly has not been accomplished in the last 60 months. **1.** Remove the freewheel assembly. **2.** Disassemble the freewheel assembly. **NOTE** Do not do a non-destructive inspection. It is not necessary to remove paint from the parts. **3.** Examine the parts of the freewheel assembly for condition. **4.** Restore the surface finish of the damaged part(s), as applicable. **5.** Assemble the freewheel assembly. **6.** Install the freewheel assembly.		

SCHEDULED INSPECTIONS

5-38. 300-HOUR OR 12-MONTH INSPECTION

DATA REFERENCE	INSPECTION TASK DESCRIPTION	INITIAL MECH	INITIAL OTHER
	DATE: _____ **W.O.** _____ **FACILITY:** _____ **HELICOPTER S/N:** _____ **REGISTRY NO.:** _____ **TOTAL TIME:** _____ **SIGNATURE:** _____ **NOTE** This inspection is only applicable when conducting the 100-hour airframe progressive or 100-hour airframe periodic inspection program.		
BHT-ELEC-SPM	**BATTERY** Remove battery and recondition according to the BHT-ELEC-SPM and manufacturer's service manual. Inspect vent lines for obstructions or damage. Clean battery mounting area prior to installing serviceable battery.		

SCHEDULED INSPECTIONS

5-39. 600 HOURS OR 12 MONTHS OF COMPONENT OPERATION

DATA REFERENCE	INSPECTION TASK DESCRIPTION	INITIAL MECH	INITIAL OTHER
	DATE: _____ W.O. _____		
	FACILITY: _____		
	HELICOPTER S/N: _____		
	REGISTRY NO.: _____		
	TOTAL TIME: _____		
	SIGNATURE: _____		
Chapter 66	**MAIN DRIVESHAFT**		
	NOTE Not applicable to 206L1+ IGW Upgrade helicopters.		
Chapter 12 BHT-206L-CR&O	Inspect inner and outer coupling teeth splines. Inspection is to be accomplished concurrently with lubrication requirements.		
	ELECTRICAL		
Chapter 96	Perform operational test of internal battery overtemperature sensor switches.		

SCHEDULED INSPECTIONS

5-40. 1200 HOURS OF COMPONENT OPERATION

DATA REFERENCE	INSPECTION TASK DESCRIPTION	INITIAL MECH	INITIAL OTHER
	DATE: _____ **W.O.** _____ **FACILITY:** _____ **HELICOPTER S/N:** _____ **REGISTRY NO.:** _____ **TOTAL TIME:** _____ **SIGNATURE:** _____		
	FREEWHEEL ASSEMBLY (WITH CLUTCH CL41742-1)		
Chapter 66	**1.** Remove freewheel assembly.		
BHT-206L-CR&O	**2.** Disassemble, clean, and visually inspect freewheel assembly.		
	3. Visually inspect clutch assembly, inner and outer race shaft assemblies, and bearings for serviceability.		
	4. Reassemble freewheel assembly.		
Chapter 66	**5.** Install freewheel assembly.		
BHT-206L-CR&O	**MAIN ROTOR HUB ASSEMBLY**		
	NOTE Applicable only to main rotor hub 206-011-100-129 and subsequent with yoke 206-011-149-105 installed.		
	NOTE For main rotor hub assemblies which were greased with high pressure grease (C-172) during and since last overhaul or since new, trunnion and pillow blocks do not need to be removed for inspection prior to overhaul.		

SCHEDULED INSPECTIONS

5-40. 1200 HOURS OF COMPONENT OPERATION (CONT)

DATA REFERENCE	INSPECTION TASK DESCRIPTION	INITIAL MECH	INITIAL OTHER
	1. Inspect yoke and trunnion bearing surfaces for brinelling. **2.** Inspect yoke, latch bolts, strap pins, strap fittings, trunnion, pillow blocks, grips, and pitch horns for corrosion. **3.** Visually inspect all hub components for excessive wear or damage.		

SCHEDULED INSPECTIONS

5-41. 1500 HOURS OF COMPONENT OPERATION

DATA REFERENCE	INSPECTION TASK DESCRIPTION	INITIAL
	DATE: _____ **W.O.** _____ **FACILITY:** _____ **HELICOPTER S/N:** _____ **REGISTRY NO.:** _____ **TOTAL TIME:** _____ **SIGNATURE:** _____	
Chapter 66 BHT-206A/B/L-Series-CR&O	**MAIN ROTOR MAST** **1.** Remove, disassemble, and clean main rotor mast. **2.** Inspect main rotor mast as follows: **a.** Visually inspect mast splines for burrs, nicks, cracks, and wear. Indication of wear requires an over pins dimensional check. **b.** Visually inspect mast inner and outer surfaces for corrosion. Inspect surface protective coatings for condition. **c.** Visually inspect bearing balls and races for pits, erosion, spalling, and brinelling. **3.** Reassemble and install main rotor mast.	
Chapter 66	**TRANSMISSION** **NOTE** To increase the inspection interval to 2250 hours or 60 months, transmissions 206-040-004-107 and subsequent (206-040-004-115 and subsequent for 206L1+ IGW Upgrade helicopters) must have been operated with DOD-PRF-85734 oil since new or since the last overhaul (TB 206L-04-213).	

SCHEDULED INSPECTIONS

5-41. 1500 HOURS OF COMPONENT OPERATION (CONT)

DATA REFERENCE	INSPECTION TASK DESCRIPTION	INITIAL
Chapter 66	**1.** Remove transmission.	
	2. Remove mast assembly, oil filter, and housing assembly. Inspect oil filter for debris and metal contamination.	
BHT-206L-CR&O	**3.** Remove top case, planetary, and sun gear.	
BHT-206L-CR&O Chapter 63	**4.** Perform a sun gear special inspection.	
	5. Penetrant inspect transmission top case except that stripping paint from exterior surface is not required.	
	6. Install sun gear, planetary, and top case.	
Chapter 66	**7.** Install mast, oil filter, and transmission.	
Chapter 66	**FREEWHEEL ASSEMBLY (WITH CLUTCH CL42250-1)**	
Chapter 66	**1.** Remove freewheel assembly.	
BHT-206L-CR&O	**2.** Disassemble the freewheel assembly to the extent necessary to perform a visual inspection of the clutch assembly, inner shaft and outer shaft. It is not necessary to remove the thrust bearing from the outer shaft. Remove all sealant and clean all parts. The stripping of paint is not required.	
	3. Visually inspect clutch assembly, inner and outer race shaft assemblies, and bearings for serviceability.	
	4. Assemble freewheel assembly.	
Chapter 66	**5.** Install freewheel assembly	

SCHEDULED INSPECTIONS

5-42. 1500 HOURS OF COMPONENT OPERATION AND EVERY 50 HOURS THEREAFTER

DATA REFERENCE	INSPECTION TASK DESCRIPTION	INITIAL MECH	INITIAL OTHER
	DATE: _____ **W.O.** _____ **FACILITY:** _____ **HELICOPTER S/N:** _____ **REGISTRY NO.:** _____ **TOTAL TIME:** _____ **SIGNATURE:** _____		
Chapter 65 ASB 206L-93-89	**SWASHPLATE SUPPORT 206-010-452-001/-005/-109** **NOTE** If windy conditions prevail, secure blades with tie-down to prevent excessive main rotor flapping. **1.** Thoroughly clean swashplate support base area using drycleaning solvent (C-304) to remove all dirt, grease, and oil residue, then wipe dry. Visually inspect full circumference of fillet radius for cracks using a 10X magnifying glass. Pay particular attention to aft side of swashplate support assembly. **2.** If after accomplishment of step 1 a crack is suspected, carry out further inspection by dye penetrant inspection method (BHT-ALL-SPM, Chapter 6). Paint finish may be removed as required in suspected area.		

SCHEDULED INSPECTIONS

5-43. 2250 HOURS OR 60 MONTHS OF COMPONENT OPERATION

DATA REFERENCE	INSPECTION TASK DESCRIPTION	INITIAL MECH	INITIAL OTHER
	DATE: _____ **W.O.** _____ **FACILITY:** _____ **HELICOPTER S/N:** _____ **REGISTRY NO.:** _____ **TOTAL TIME:** _____ **SIGNATURE:** _____		
	TRANSMISSION **NOTE** This inspection is applicable to transmission assemblies 206-040-004-107 and subsequent (206-040-004-115 and subsequent for 206L1+ IGW Upgrade helicopters that have been operating with DOD-PRF-85734 oil since new or since last overhaul (TB 206L-04-213). If the transmission has been operated with MIL-PRF-7808 oil, the 1500 Hours of Component Operation scheduled inspection applies.		
Chapter 66	**1.** If installed on the helicopter, remove the transmission assembly.		
	2. Remove the mast and swashplate assembly from the transmission assembly.		
	3. Inspect oil filter for debris and metal contamination.		
BHT-206L-CR&O	**4.** Remove the transmission top case, the planetary assembly, and the sun gear.		
	5. Visually examine all removed components for condition.		

SCHEDULED INSPECTIONS

5-43. 2250 HOURS OR 60 MONTHS OF COMPONENT OPERATION (CONT)

DATA REFERENCE	INSPECTION TASK DESCRIPTION	INITIAL MECH	INITIAL OTHER
	6. Insert a mirror between the spiral bevel gear edge and the lower case and use a bright light to examine the spiral bevel gear, input pinion gears, and surrounding areas for condition.		
	7. Reassemble the transmission.		
Chapter 66	**8.** Install the mast and swashplate assembly into the transmission assembly.		
	9. Apply sealant, primer, and paint to the required areas.		
	10. Install the transmission assembly into the helicopter.		
Chapter 12	**11.** Service the transmission with oil (DOD-PRF-85734).		

SCHEDULED INSPECTIONS

5-44. 3000 HOURS OF COMPONENT OPERATION

DATA REFERENCE	INSPECTION TASK DESCRIPTION	INITIAL MECH	INITIAL OTHER
	DATE: _____ **W.O.** _____ **FACILITY:** _____ **HELICOPTER S/N:** _____ **REGISTRY NO.:** _____ **TOTAL TIME:** _____ **SIGNATURE:** _____		
BHT-206L-CR&O	**TAIL ROTOR GEARBOX** **NOTE** This inspection may be accomplished concurrently with the duplex bearing (206-040-410-003, -005, -101 or subsequent) replacement at 3000 hours. **1.** Perform backlash check of the gearbox prior to disassembly. Backlash shall be 0.003 to 0.011 inch (0.08 to 0.28 mm) and shall not vary more than 0.002 inch (0.05 mm) when measured at three different locations. Record backlash for later reference. **NOTE** If this inspection is being done in conjunction with replacement of bearing (206-040-410-003, -005, -101 or subsequent), removal of input pinion assembly is not required. Remove output cap, output shaft, and duplex bearing (206-040-410-003, -005, -101 or subsequent) after complying with step 1. **2.** Remove input pinion and bearings. Remove output cap and oil level sight glass. **3.** Inspect spiral bevel gear and input pinion gear for corrosion and chipped, broken, or worn gear teeth. Inspect gear wear patterns.		

SCHEDULED INSPECTIONS

5-44. 3000 HOURS OF COMPONENT OPERATION (CONT)

DATA REFERENCE	INSPECTION TASK DESCRIPTION	INITIAL MECH	INITIAL OTHER
	4. Visually inspect accessible areas of input pinion duplex bearing, input pinion roller alignment bearing, and output shaft roller alignment bearing and race for roughness, spalling, scoring, pitting, flaking, broken or damaged retainers, and for evidence of overheating and corrosion. **5.** Visually inspect studs and dowel pins in case assembly for security and damage. Replace damaged studs and/or dowel pins. **6.** Inspect accessible areas of case and output cap for corrosion and damage. **7.** Inspect sight glass for cracking, crazing, or any condition that may obscure level or color of oil. Inspect oil level indicator for discoloration, peeling paint, or evidence of a plastic film on painted side. Remove plastic film if present. **8.** Reassemble gearbox. Exercise caution when inserting input pinion assembly, if previously removed, to ensure proper gear mesh with spiral bevel gear. **9.** Check gearbox backlash. Measured values shall be within 0.001 inch (0.03 mm) of those obtained in step 1. **NOTE** If input pinion and spiral bevel gear were replaced at this time, backlash figures may not fall within 0.001 inch (0.03 mm) of those obtained in step 1. Backlash shall, however, fall within overhaul limits. **10.** Apply sealant and touch up finish as required.		

5-45. SPECIAL INSPECTIONS

Accomplish the following special inspections on the helicopter (paragraph 5-46 through paragraph 5-50):

- After fuel system maintenance and/or component change
- 1 to 5 hours after each installation
- 3 to 8 hours after each installation
- 10 to 25 hours after each installation
- 100 hours after each installation

SPECIAL INSPECTIONS

5-46. AFTER FUEL SYSTEM MAINTENANCE AND/OR COMPONENT CHANGE

DATA REFERENCE	INSPECTION TASK DESCRIPTION	INITIAL MECH	INITIAL OTHER
	DATE: _____ **W.O.** _____ **FACILITY:** _____ **HELICOPTER S/N:** _____ **REGISTRY NO.:** _____ **TOTAL TIME:** _____ **SIGNATURE:** _____ **NOTE** Accomplish immediately after fuel system maintenance and/or component change/removal, at an adequate maintenance facility.		
Chapter 28	**FUEL SYSTEM** **NOTE** Installation and removal of a fuel boost pump cartridge, fuel quantity probe, or fuel drain valve does not require this inspection. If fuel system maintenance and/or component change/removal is performed at a site remote from an adequate maintenance facility, accomplish step 1, substep c through substep e, and step 3, or step 2 and step 3, as applicable, prior to flight. Upon return to an adequate maintenance facility, but not to exceed 10 flight hours, accomplish entire inspection. **1.** When maintenance or component change/removal is conducted below the top fitting of the aft fuel cell immediately following fuel system maintenance and/or major component change/removal (boost pump assembly, manifold, flow switches, inline filters, ejector pumps, check valves, fuel line or hoses), ground run helicopter and check for air and fuel leaks and for proper operation as follows:		

SPECIAL INSPECTIONS

5-46. AFTER FUEL SYSTEM MAINTENANCE AND/OR COMPONENT CHANGE (CONT)

DATA REFERENCE	INSPECTION TASK DESCRIPTION	INITIAL MECH	INITIAL OTHER
Chapter 12	**a.** Make sure all fuel has been drained from aft and forward fuel cells.		
	b. Service fuel cell with 10 gallons (37.9 L) of fuel.		
BHT-206L1-FM-1 (BHT-206L3-FM-1 for 206L1 Engine Upgrade and BHT-206L4-FM-1 for 206L1+ IGW Upgrade helicopters	**c.** Perform normal engine starting and run-up checks.		
	d. Set throttle to full open and operate engine at 100% N_2 for a minimum of 2 minutes with both fuel boost pumps OFF. If flameout or power loss occurs, refer to step 3.		
	e. Perform normal engine shutdown.		
Chapter 28	**f.** Remove fuel quantity probe from left forward fuel cell. Inspect cell to ensure furl transfer from aft to forward fuel cells has not taken place.		
	g. Reinstall fuel quantity probe.		
	2. When maintenance and/or component change is conducted above the top fitting of the fuel cell, immediately following the fuel system maintenance and/or component change/removal (fuel pressure transducer, fuel valve, scheduled fuel component change/removal fuel line or hose), ground run helicopter and check for air or fuel leaks and for proper operation as follows:		
BHT-206L1-FM-1 (BHT-206L3-FM-1 for 206L1 Engine Upgrade and BHT-206L4-FM-1 for 206L1+ IGW Upgrade helicopters	**a.** Perform normal engine start and run-up checks.		
	b. Set throttle to full open and operate engine at 100% N_2 for a minimum of 2 minutes with both fuel pumps OFF. If flameout or power loss occurs, refer to step 3.		

SPECIAL INSPECTIONS

5-46. AFTER FUEL SYSTEM MAINTENANCE AND/OR COMPONENT CHANGE (CONT)

DATA REFERENCE	INSPECTION TASK DESCRIPTION	INITIAL MECH	INITIAL OTHER
Rolls-Royce 250-C28 Series Operation and Maintenance Manual, 16W2 (Rolls-Royce 250-C30P Operation and Maintenance Manual, 14W2 for 206L1 Engine Upgrade and 206L1+ IGW Upgrade).	**3.** If flameout or power loss occurs, air is entering the helicopter or engine fuel system, or an engine pneumatic leak exists. Malfunction must be corrected before commencing flight operations. **a.** Verify fuel boost pump, check valve, and fuel shutoff valve for proper operation. **b.** Make sure all hoses and lines are serviceable and do not have cracked flares and that B nuts are correctly torqued. **c.** Purge air from fuel system and accomplish pneumatic leak check.		

SPECIAL INSPECTIONS

5-47. 1 TO 5 HOURS AFTER EACH INSTALLATION

DATA REFERENCE	INSPECTION TASK DESCRIPTION	INITIAL MECH	INITIAL OTHER
	DATE: _____ **W.O.** _____ **FACILITY:** _____ **HELICOPTER S/N:** _____ **REGISTRY NO.:** _____ **TOTAL TIME:** _____ **SIGNATURE:** _____ **MAIN ROTOR** **NOTE** The mast nut torque is thought to be stable when two subsequent torque checks are successful. (no turning of the mast nut).		
Chapter 65 TB 206L-07-223	**1.** Torque check main rotor mast nut 250 to 275 foot-pounds (339 to 372 Nm) (TB 206L-07-223). **2.** After completion of the first 1 to 5 hours torque check as per step 1, do a second torque check of the main rotor mast nut 250 to 275 foot-pounds (339 to 372 Nm) within 15 minutes to 5 hours of flight. **3.** Once the mast nut is stable proceed as follows: **a.** Clean the surface of the flap restraint support adjacent to the mast nut, the mast nut serrations and the mast nut lock with a clean cloth wet with acetone (C-316), MEK (C-309) or equivalent. **b.** Apply a bead of sealant (C-251) to the mating edge of the mast nut serrations and the flap restraint support. Do not allow sealant into the mast nut lock bolt threaded hole in the flat restraint support. **c.** While the sealant is wet install the mast nut lock (Chapter 65). **d.** Smooth the sealant to prevent moisture in any areas.		

SPECIAL INSPECTIONS

5-48. 3 TO 8 HOURS AFTER EACH INSTALLATION

DATA REFERENCE	INSPECTION TASK DESCRIPTION	INITIAL MECH	INITIAL OTHER
	DATE: _____ **W.O.** _____ **FACILITY:** _____ **HELICOPTER S/N:** _____ **REGISTRY NO.:** _____ **TOTAL TIME:** _____ **SIGNATURE:** _____		
BHT-206L-CR&O	**MAIN ROTOR** Torque check pillow block retention bolts/nuts 84 to 107 inch-pounds (9.4 to 12 Nm). Check for misalignment of anti-slippage marks.		

SPECIAL INSPECTIONS

5-49. 10 TO 25 HOURS AFTER EACH INSTALLATION

DATA REFERENCE	INSPECTION TASK DESCRIPTION	INITIAL MECH	INITIAL OTHER
	DATE: _____ **W.O.** _____ **FACILITY:** _____ **HELICOPTER S/N:** _____ **REGISTRY NO.:** _____ **TOTAL TIME:** _____ **SIGNATURE:** _____		
	SWASHPLATE ASSEMBLY		
Chapter 65	Check swashplate tilt friction. Value must be between 15 to 32 pounds (67 to 142 N). If not within limits, adjust to 15 to 32 pounds (67 to 142 N). Check tilt friction every 10 to 25 hours until it is stabilized.		
Chapter 66	**DISC PACK COUPLING** Torque check disc pack coupling attaching hardware as follows: **1.** Apply the minimum torque required for the fasteners. If the fasteners do not move, the check is completed. Check torque seal and apply as required. **2.** If the fastener(s) moved, do the steps that follow: **a.** Remove the affected disc pack coupling and examine the bolts, nuts (minimum tare torque, refer to BHT-ALL-SPM) and washer for condition. Discard damaged parts. **b.** Examine the disc pack coupling for condition. Discard damaged disc pack coupling. **c.** Install the removed disc pack coupling and repeat torque check after 10 to 25 hours.		

SPECIAL INSPECTIONS

5-49. 10 TO 25 HOURS AFTER EACH INSTALLATION (CONT)

DATA REFERENCE	INSPECTION TASK DESCRIPTION	INITIAL MECH	INITIAL OTHER
Chapter 66	**TAIL ROTOR GEARBOX** Torque check tail rotor gearbox retaining nuts 50 to 70 inch-pounds (5.6 to 7.9 Nm). Repeat every 10 to 25 hours until torque has stabilized.		

SPECIAL INSPECTIONS

5-50. 100 HOURS AFTER EACH INSTALLATION

DATA REFERENCE	INSPECTION TASK DESCRIPTION	INITIAL MECH	INITIAL OTHER
	DATE: _____ **W.O.** _____ **FACILITY:** _____ **HELICOPTER S/N:** _____ **REGISTRY NO.:** _____ **TOTAL TIME:** _____ **SIGNATURE:** _____		
	POWER PLANT		
Chapter 71	**1.** Torque check engine mount attachment hardware at engine and airframe attachment points. **2.** If fastener is improperly torqued: **a.** Check nuts tare torque, and bolt threads and shanks for damage. **b.** Check engine mounts and supporting structure for damage. **c.** Install new fastener if required, and apply torque. Recheck torque at next 100 hours.		
Chapter 53	**TAILBOOM** Torque check tailboom attachment nuts 375 to 415 inch-pounds (42.4 to 46.8 Nm).		
	TRANSMISSION		
Chapter 66	**1.** Replace oil filter element and oil. Inspect removed element for metal particles. If particles are found, investigate to determine cause.		

SPECIAL INSPECTIONS

5-50. 100 HOURS AFTER EACH INSTALLATION (CONT)

DATA REFERENCE	INSPECTION TASK DESCRIPTION	INITIAL MECH	INITIAL OTHER
	NOTE If a nut is improperly torqued, remove and check tare torque, and replace as required. Recheck torque at next 100 hours. **2.** Check transmission top case stud nuts for torque. **a.** For transmission P/N 206-040-004-101/-111, 100 to 140 inch-pounds (12 to 15 Nm). **b.** For transmission P/N 206-040-004-107/-115, 130 to 160 inch-pounds (15 to 18 Nm).		
BHT-ALL-SPM	**3.** Touch up paint finish as required.		

SPECIAL INSPECTIONS

5-50A. FREEWHEEL LUBRICATION SYSTEM

DATA REFERENCE	INSPECTION TASK DESCRIPTION	INITIAL MECH	INITIAL OTHER
	DATE: _____ **W.O.** _____ **FACILITY:** _____ **HELICOPTER S/N:** _____ **REGISTRY NO.:** _____ **TOTAL TIME:** _____ **SIGNATURE:** _____ This special inspection is required to ensure that there is no debris or blockage of restrictor 206-040-244-001 or 406-040-623-101 and 406-040-624-101 located on the left side of the forward engine firewall. Blockage of the restrictor could cause the freewheel assembly to malfunction. **FREEWHEEL OIL SUPPLY SYSTEM FILTER (50-075-1) AND RESTRICTOR (206-040-244-001 OR 406-040-623-101 AND 406-040-624-101).** **WARNING** THE FREEWHEEL OIL SUPPLY SYSTEM INSPECTION MUST BE DONE AFTER ANY OF THE FOLLOWING EVENTS: • Anytime the freewheel oil supply is opened upstream of the restrictor. • The disconnection, replacement, or reconnection of any fitting, hose or component between restrictor 206-040-244-001 or 406-040-623-101 and 406-040-624-101 and filter 50-075-1.		
Chapter 66 ASB 206-14-174	**1.** After the post installation and installation leak check, do an inspection and clean the components that follow as per ASB 206L-14-174:		

SPECIAL INSPECTIONS

5-50A. FREEWHEEL LUBRICATION SYSTEM(CONT)

DATA REFERENCE	INSPECTION TASK DESCRIPTION	INITIAL MECH	INITIAL OTHER
	• Filter (P/N 50-075-1) • Restrictor (P/N 206-040-244-001 or 406-040-623-101 and 406-040-624-101).		

CONDITIONAL INSPECTIONS

5-51. CONDITIONAL INSPECTIONS

Accomplish conditional inspections (paragraph 5-52 through paragraph 5-58) of the helicopter after the following:

- Hard landing
- Sudden stoppage/acceleration
- Overspeed — Main rotor — 114% or greater
- Overtorque
- Engine compressor stall or surge
- Lightning strike
- Engine overtemp

CONDITIONAL INSPECTIONS

5-52. HARD LANDING

DATA REFERENCE	INSPECTION TASK DESCRIPTION	INITIAL MECH	INITIAL OTHER
	DATE: _____ **W.O.** _____ **FACILITY:** _____ **HELICOPTER S/N:** _____ **REGISTRY NO.:** _____ **TOTAL TIME:** _____ **SIGNATURE:** _____ **HARD LANDING** A hard landing is defined as any incident in which the impact of the helicopter with the ground causes severe pitching of the main rotor. Blades involved in this type of hard landing must be thoroughly inspected visually. If no obvious damage is discovered, the blades may be retained in service for continued usage. If on a hard landing either main rotor blade comes into contact with the ground, tailboom, or other foreign object, both main rotor blades are to be regarded as having been involved in a Sudden Stoppage and must be returned to a blade repair station for inspection. The airframe landing skids and crosstubes will deform and yield under load forces in excess of 2.5 Gs. If the cabin fuselage contacts the ground the G forces in the fuselage increase abruptly. If following a hard landing the cabin fuselage is resting on the ground or shows evidence of having touched the ground, it is considered to have sustained a 10 G load. If on a hard landing the shear pin in the elevator control tube (206-001-098) is sheared, the eyebolt (206-001-902) that retains the elevator control tube (206-001-098) to the torque tube (206-001-306) must be replaced as well as the elevator control tube (206-001-098).		

CONDITIONAL INSPECTIONS

5-52. HARD LANDING (CONT)

DATA REFERENCE	INSPECTION TASK DESCRIPTION	INITIAL MECH	INITIAL OTHER
	NOTE Components removed from helicopter for evaluation following a hard landing shall be evaluated as an interrelated group. Removal records accompanying each component shall cross-reference part and serial numbers of other drive system components removed for evaluation. **1.** Inspect landing gear skid tubes and crosstubes for damage and deflection. Inspect crosstube attachment points for damage or distortion. **2.** Check all cowlings, fairings, and doors for proper fit and alignment. Misaligned cowling, fairing or doors may indicate a distorted fuselage, resulting in major stresses and damage to components. **3.** Remove all cowlings and fairings necessary to perform a complete visual inspection. **4.** Engine. Refer to Rolls-Royce 250-C28 Series Operation and Maintenance Manual, 16W2 (Rolls-Royce 250-C30P Operation and Maintenance Manual, 14W2 for 206L1 Engine Upgrade and 206L1+ IGW Upgrade). **5.** Inspect structure with a 10X magnifying glass around the transmission mounting points. Particular attention should be given to the transmission restraint system and transmission mount stops for sheared bolts, damaged drag pins, and supports. **6.** Inspect tail skid tube and mounting for damage. Inspect tailboom internally and externally for cracks, distortion, and sheared or loose rivets. Inspect the tailboom attachment points for elongated bolt holes and damaged structure.		

CONDITIONAL INSPECTIONS

5-52. HARD LANDING (CONT)

DATA REFERENCE	INSPECTION TASK DESCRIPTION	INITIAL MECH	INITIAL OTHER
	7. Perform complete visual inspection of the flight control system from pilot controls to main rotor head for bent or damaged tubes, bellcranks, and supports, and for damaged bearings. Particular attention should be given to the pitch link assemblies and swashplate pivot assembly. In addition to inspecting pitch link assemblies for damage, inspect for corrosion and cracks (pay particular attention to swaged ends at jam nut or insert faying surface), and inspect for wear in pitch horn trunnion bearings. **NOTE** Control tubes and pitch link assemblies may be inspected for being bent by rolling on a surface plate or with the use of a metal straight edge. On fixed control tubes, the swaged end must be concentric to tube within 0.06 inch total indicator reading. Inspect bearings for smoothness and maximum allowable wear. **8.** Check for leaks in the hydraulic system, interference or binding of hydraulic actuators and controls, and for satisfactory operation. **9.** Mast inspection. **a.** Inspect mast for indentations caused by hard contact by main rotor hub static stops. **b.** Inspect cabin roof shell and beam supporting the transmission mount support assemblies for cracks or deformation. **c.** Inspect transmission up and down stops for deformation and for loss of attachment nut torque. **d.** Inspect the transmission restraint and drag pins for damage. Inspect cabin roof shell and beam supporting transmission restraint for cracks or deformation.		

CONDITIONAL INSPECTIONS

5-52. HARD LANDING (CONT)

DATA REFERENCE	INSPECTION TASK DESCRIPTION	INITIAL MECH	INITIAL OTHER
BHT-206L1-FM-1 (BHT-206L3-FM-1 for 206L1 Engine Upgrade and BHT-206L4-FM-1 for 206L1+ IGW Upgrade helicopters)	**e.** Start engine and check main rotor, while in a flat pitch condition, for any evidence of a 1/rev vibration. If one or more of the previous inspection requirements, step 9, substep a through substep d, reveal an unsatisfactory condition, a mast runout inspection must be performed. **f.** If damage in any of the previous requirements of step 9, substep a through substep e is noted, the main rotor hub assembly must be overhauled in accordance with the Conditional Inspection criteria. **10.** Inspect main rotor blades for contact with tailboom. If damage is found, accomplish main rotor Sudden Stoppage/ Acceleration inspection (paragraph 5-53). **11.** Inspect tail rotor blades for damage. If damage is found, accomplish tail rotor Sudden Stoppage/Acceleration inspection (paragraph 5-53). **12.** Inspect fuel and oil systems for damage. Before flight, check fuel and oil systems for leaks. **13.** Inspect engine mounts at fuselage attachment points for cracks. **14.** If damage decribed in step 15 and/or step 16 is found, remove the main rotor blades. Send main rotor blades to a Bell Helicopter Textron approved blade repair facility for evaluation. **15.** If damage to fuselage structure, skid gear, or tailboom is such that a major repair, replacement, or alignment is necessary, remove the following components and conduct an overhaul. **a.** Main rotor hub assembly in accordance with the Conditional Inspection criteria. **b.** Swashplate and support assembly. **c.** All control tubes, bolts, bellcrank, levers, and support assemblies.		

CONDITIONAL INSPECTIONS

5-52. HARD LANDING (CONT)

DATA REFERENCE	INSPECTION TASK DESCRIPTION	INITIAL MECH	INITIAL OTHER
	d. Pitch link assemblies, main rotor, and tail rotor. **e.** Transmission and mast assembly. **f.** Main driveshaft assembly (grease lubricated). For 206L1+ IGW Upgrade helicopters, remove and discard the engine to transmission KAflex driveshaft. **g.** Tail rotor driveshafts and bearings. **h.** Tail rotor gearbox. **i.** Tail rotor hub and blades. **j.** Transmission restraint and mount systems. **k.** Inspect engine mounts at fuselage attachment points for cracks. **16.** If damage to mast is indicated as a result of excessively hard contact of main rotor hub static stop, replace the mast and remove the following components and conduct an overhaul. **a.** Main rotor hub assembly in accordance with the Conditional Inspection criteria. **b.** Transmission assembly. **c.** Main driveshaft assembly (grease lubricated). For 206L1+ IGW Upgrade helicopters, remove and examine the engine to transmission KAflex driveshaft for deformation and cracks. If deformation or cracks are found, discard the driveshaft. **d.** Transmission restraint. **17.** If damage is found in rotating controls, inspect and/or replace the following: **a.** Main rotor hub assembly pitch horns. **b.** Swashplate assembly.		

CONDITIONAL INSPECTIONS

5-52. HARD LANDING (CONT)

DATA REFERENCE	INSPECTION TASK DESCRIPTION	INITIAL MECH	INITIAL OTHER
	c. All connecting control tubes and control bolts.		

CONDITIONAL INSPECTIONS

5-53. SUDDEN STOPPAGE/ACCELERATION

DATA REFERENCE	INSPECTION TASK DESCRIPTION	INITIAL
	DATE: _____ **W.O.** _____ **FACILITY:** _____ **HELICOPTER S/N:** _____ **REGISTRY NO.:** _____ **TOTAL TIME:** _____ **SIGNATURE:** _____ **SUDDEN STOPPAGE/ACCELERATION — MAIN ROTOR** Sudden stoppage/acceleration is defined as any rapid deceleration or acceleration of the drive system whether caused by seizure within the drive system, impact of the main rotor with the ground or with a foreign object of sufficient inertia to cause rapid deceleration, or a sudden freewheel clutch engagement. **NOTE** Components removed from helicopter for evaluation following a sudden stoppage/acceleration shall be evaluated as an interrelated group. Removal records accompanying each components shall cross-reference part and serial numbers of other drive system components removed for evaluation. **1.** After a sudden stoppage inspect main rotor blades as follows: **a.** Inspect blade skin and bonded doublers for visible damage. **b.** Remove tip cover plate from both main rotor blades. **c.** Check tip weights. If any movement of tip weights has occurred, blade shall be scrapped. **2.** After sudden stoppage of the main rotor, remove both main rotor blades. Send both blades to a Bell Helicopter Textron approved blade repair facility for evaluation.	

CONDITIONAL INSPECTIONS

5-53. SUDDEN STOPPAGE/ACCELERATION (CONT)

DATA REFERENCE	INSPECTION TASK DESCRIPTION	INITIAL
BHT-206L-CR&O	**3.** Remove the following components and visually inspect for evidence of torsional yielding, deformation, cracks, or other obvious damage that would render them non-repairable. Conduct an overhaul of these components: **NOTE** If main rotor mast was severed during main rotor sudden stoppage/acceleration, the main rotor hub assembly must be considered unserviceable and scrapped. **a.** Main rotor hub assembly in accordance with the Conditional Inspection criteria. **NOTE** If main rotor mast was severed during a main rotor sudden stoppage/acceleration with the engine operating, the main rotor mast has sustained torsional yielding **b.** Mast assembly.	
BHT-206A/B/L-Series-CR&O	**(1)** Concurrently with mast assembly overhaul, accomplish the following inspections: **(a)** Do a Total Indicated Runout (TIR) of the main rotor mast. **CAUTION** IF MAIN ROTOR MAST HAS EVIDENCE OF TORSIONAL YIELDING, THE MAST ASSEMBLY, TRANSMISSION ASSEMBLY, MAIN DRIVESHAFT, AND FREEWHEEL ASSEMBLY (OUTER RACE, INNER RACE AND CLUTCH) SHALL BE CONSIDERED UNSERVICEABLE AND SCRAPPED. MAJOR DAMAGE TO THE MAST ASSEMBLY OTHER THAN TORSIONAL YIELDING REQUIRES REPLACEMENT OF TRANSMISSION TOP CASE. IF TRANSMISSION TOP CASE HAS TO BE SCRAPPED, PYLON MOUNT SPINDLES AND MAST BEARING(S) SHALL ALSO BE SCRAPPED.	

CONDITIONAL INSPECTIONS

5-53. SUDDEN STOPPAGE/ACCELERATION (CONT)

DATA REFERENCE	INSPECTION TASK DESCRIPTION	INITIAL
	(b) Torsional yielding may be detected by measuring the offset between the mast splines above and below the main rotor trunnion split cone groove by sliding a straight edge across the upper and lower unworn face of the spline (coast side of the spline).	
BHT-206L-CR&O	**c.** Transmission assembly.	
	d. Swashplate assembly.	
	NOTE Replace all control bolts from hydraulic servo actuator to main rotor hub.	
	e. All cyclic and collective control tubes from mixing lever to swashplate.	
	f. Pitch link assemblies.	
	g. Freewheel assembly.	
	h. Main driveshaft assembly (grease lubricated). If KAflex driveshaft is installed (206L1+ IGW Upgrade helicopters), it shall be scrapped.	
	i. Inspect transmission restraint and transmission mount system for condition, and fuselage attachment points for cracks.	
	j. Inspect engine mounts at fuselage attachment points for cracks.	
	NOTE If a tail rotor driveshaft failed as a result of torsional overload, ALL hangers, driveshaft, adapters, impellers, and disc couplings shall be considered unserviceable and scrapped. Inspect hanger attachment points for cracks and distortion. Overhaul tail rotor gearbox to ensure airworthiness.	

CONDITIONAL INSPECTIONS

5-53. SUDDEN STOPPAGE/ACCELERATION (CONT)

DATA REFERENCE	INSPECTION TASK DESCRIPTION	INITIAL
	NOTE If a tail rotor driveshaft has been damaged by main rotor strike or damaged other than torsional overload, ALL bonded tail rotor driveshafts, plus the hanger assemblies, adapters, and disc couplings fore and aft of the damaged area shall be considered unserviceable and scrapped. Inspect remaining hanger assemblies, adapters, and disc couplings according to step l and step m. Inspect hanger attachment points for cracks and distortion. **k.** Inspect tail rotor driveshafts for out-of-round condition, and distortion or bowing exceeding the limits specified. If any defect is detected, scrap ALL bonded tail rotor driveshafts. **l.** Inspect steel tail rotor drive shaft and steel adapters for cracks using magnetic particle inspection method.	
BHT-ALL-SPM	**m.** Inspect tail rotor driveshaft hangers, and disc couplings and aluminum driveshaft adapters using fluorescent penetrant inspection method.	
	4. In addition to the previous step 3, substep k through substep m and related notes, all bonded tail rotor driveshafts shall be considered unserviceable and scrapped, if during a sudden stoppage/acceleration inspection any of the following conditions, which are attributable to the sudden stoppage/acceleration, are noted: **a.** Any impact damage to a main rotor blade leading or lower skin, or any main rotor blade skin buckling or tears. **b.** Main rotor mast is sheared, power on or off. Mast shows indication of torsional yielding, out-of-round, or Total Indicated Runout (TIR) check exceeds limits. **c.** Any deformation of any coupling disc that results in gaps between laminates greater than 0.015 inch (0.381 mm). **d.** Structural failure or distortion of any coupling disc bolts. **e.** Structural failure, or distortion exceeding the specified limits of the tail rotor driveshaft steel or aluminum adapters.	

CONDITIONAL INSPECTIONS

5-53. SUDDEN STOPPAGE/ACCELERATION (CONT)

DATA REFERENCE	INSPECTION TASK DESCRIPTION	INITIAL
Rolls-Royce 250-C28 Series Operation and Maintenance Manual, 16W2 (Rolls-Royce 250-C30 Series Operation and Maintenance Manual, 14W2 for 206L1 Engine Upgrade and 206L1+ IGW Upgrade)	**5.** Refer to Rolls-Royce 250 Series Operation and Maintenance Manual, for sudden stoppage inspection requirements. **SUDDEN STOPPAGE/ACCELERATION — TAIL ROTOR** Sudden stoppage/acceleration is defined as any rapid deceleration or acceleration of the torsional drive system whether caused by seizure within the helicopter drive system, or by contact of the tail rotor blade(s) with the ground, water, or with a foreign object of sufficient inertia to cause rapid deceleration, or a sudden freewheel clutch engagement, or a compressor stall causing rapid acceleration. **CAUTION** DAMAGE TO TAIL ROTOR BLADE ASSEMBLY COULD BE PRESENT ALTHOUGH IT MAY NOT BE READILY DETECTED BY STANDARD VISUAL, DIMENSIONAL, AND MAGNETIC PARTICLE OR FLUORESCENT PENETRANT INSPECTION METHODS. **NOTE** Components removed from helicopter for evaluation following a sudden stoppage/acceleration shall be evaluated as an interrelated group. Removal records accompanying each component shall cross-reference part and serial numbers of other drive system components removed for evaluation. **1.** Remove and scrap tail rotor hub and blade assembly. **2.** Overhaul the following components: **a.** Tail rotor gearbox assembly. **b.** Freewheel assembly.	

CONDITIONAL INSPECTIONS

5-53. SUDDEN STOPPAGE/ACCELERATION (CONT)

DATA REFERENCE	INSPECTION TASK DESCRIPTION	INITIAL
	NOTE Not applicable to KAflex driveshaft installed on 206L1+ IGW Upgrade helicopters. **c.** Main driveshaft assembly (grease lubricated). **d.** Tail rotor pitch change mechanism.	
BHT-ALL-SPM	**3.** Inspect all tail rotor driveshaft, impeller, steel and aluminum adapters, flexible coupling discs, and hangers using magnetic particle or fluorescent penetrant methods. **4.** Visually inspect shafts for evidence of twisting, check for out-of-round and Total Indicated Runout (TIR) exceeding specified limits. Inspect the bonds between the tail rotor driveshaft and bonded adapter for integrity. If any defect is detected, scrap ALL bonded tail rotor driveshafts. **5.** Inspect tail rotor hanger support at tailboom and fuselage attachment points for cracks. **6.** Inspect tail rotor hanger support for cracks and distortion. **NOTE** If tail rotor driveshaft failed as a result of torsional overload, ALL hangers, driveshafts, adapters, impeller, and disc couplings shall be considered unserviceable and scrapped. Inspect hanger attachment points for cracks and distortion. Ensure airworthiness of tail rotor gearbox by conducting a major overhaul. If a tail rotor driveshaft has been damaged by main rotor strike or damage other than torsional overload, ALL bonded tail rotor driveshafts, plus the hanger assemblies, adapter, and disc couplings fore and aft of the damaged area shall be considered unserviceable and scrapped. Inspect remaining hanger assemblies, adapters and disc couplings using magnetic particle or fluorescent penetrant inspection, whichever is applicable for cracks and distortion. **7.** In addition ALL bonded tail rotor driveshaft shall be considered unserviceable and scrapped, if during a sudden stoppage inspection any of the following conditions, which are attributable to the sudden stoppage, are noted:	

CONDITIONAL INSPECTIONS

5-53. SUDDEN STOPPAGE/ACCELERATION (CONT)

DATA REFERENCE	INSPECTION TASK DESCRIPTION	INITIAL
	a. Any impact damage to a tail rotor blade leading edge or skin, or any tail rotor blade skin buckling or tears. **b.** Any deformation of any coupling discs that results in gaps between laminates greater than 0.015 inch (0.381 mm). **c.** Structural failure or distortion of any coupling disc bolts. **d.** Structural failure or distortion exceeding the specified limits of the tail rotor driveshaft steel or aluminum adapter. **8.** Inspect tailboom area of tail rotor gearbox mounting studs and dowel pins for cracks using a 10X magnifying glass or fluorescent penetrant method of inspection. **9.** Inspect the four tailboom attachment points for cracks, distortion damage, and security. Check torque on nuts of tailboom attachment bolts.	
BHT-206-SRM-1	**10.** Inspect tailboom internally for cracks, distortion, and loose or missing rivets. Check external skin of tailboom for cracks and waviness paying particular attention to area of horizontal stabilizer and attachment points of vertical fin. **11.** Inspect horizontal stabilizer for cracks and looseness. **12.** Inspect vertical fin for security and overall condition. Check tail skid for condition and security. Check mounting of anticollision light for security and condition.	
Rolls-Royce 250-C28 Series Operation and Maintenance Manual, 16W2 (Rolls-Royce 250-C30 Series Operation and Maintenance Manual, 14W2 for 206L1 Engine Upgrade and 206L1+ IGW Upgrade)	**13.** Refer to Rolls-Royce 250 Series Operation and Maintenance Manual for sudden stoppage inspection requirements.	

CONDITIONAL INSPECTIONS

5-54. OVERSPEED MAIN ROTOR — 114% OR GREATER

DATA REFERENCE	INSPECTION TASK DESCRIPTION	INITIAL MECH	INITIAL OTHER
	DATE: _____ **W.O.** _____ **FACILITY:** _____ **HELICOPTER S/N:** _____ **REGISTRY NO.:** _____ **TOTAL TIME:** _____ **SIGNATURE:** _____ **OVERSPEED MAIN ROTOR — 114% OR GREATER** **NOTE** Components removed from a helicopter for evaluation following an overspeed shall be evaluated as an interrelated group. Removal records accompanying each component shall cross-reference part and serial numbers of other drive system components removed for evaluation. For main rotor overspeeds above 107% and up to 114%, visually inspect main rotor blades and tail rotor blades for skin wrinkles or damage. If damage or wrinkles are detected, accomplish complete overspeed inspection. **1.** If the main rotor overspeeds in excess of 114% RPM, proceed with the following: **a.** Discarding of the following items is mandatory: **(1)** Tension/torsion straps. **(2)** Inboard strap fittings and pins. **(3)** Latch bolts. **b.** Main rotor blades.		

CONDITIONAL INSPECTIONS

5-54. OVERSPEED MAIN ROTOR — 114% OR GREATER (CONT)

DATA REFERENCE	INSPECTION TASK DESCRIPTION	INITIAL MECH	INITIAL OTHER
	(1) Dimensionally check main rotor blade retention bolt hole for indications of permanent deformation or damage. If inside diameter of bushing in the hole is elongated in excess of 0.0015 inch (0.0381 mm), remove blade from service and return it to a Bell Helicopter Textron approved major overhaul facility for further inspection. Any evident looseness of bushing is cause for scrapping blade. **(2)** Remove tip cap assembly from main rotor blade and inspect tip cap attaching screws for deformation. Any deformation of screws or elongation of mating holes in the spar is cause for scrapping blade. **(3)** Visually inspect main rotor blade for skin wrinkles or deformation. If any indication of wrinkles or deformation exists, return blade to a Bell Helicopter Textron approved major overhaul facility for evaluation. **(4)** If main rotor blades pass the previous inspection, they are acceptable for continued service. **c.** Tail rotor blades. **(1)** If one of the tail rotor blades of a pair has been damaged badly enough that metal has been torn or any bond plies have separated, then both blades and tail rotor hub must be scrapped. **(2)** If contour of a blade has been damaged slightly (distortion), then both blades and tail rotor hub must be scrapped. **(3)** If any movement of the tip block or root end balance weights has occurred, scrap tail rotor hub assembly and both tail rotor blades. **(4)** If tip block is cracked, scrap tail rotor hub assembly and both tail rotor blades. **(5)** If tail rotor blades pass the above inspection requirements and no other discrepancies exist, the blades are acceptable for continued service.		

CONDITIONAL INSPECTIONS

5-54. OVERSPEED MAIN ROTOR — 114% OR GREATER (CONT)

DATA REFERENCE	INSPECTION TASK DESCRIPTION	INITIAL MECH	INITIAL OTHER
BHT-206L-CR&O	**d.** Overhaul the main rotor hub assembly in accordance with the Conditional Inspection criteria.		
BHT-206A/B/L-Series-CR&O, Chapter 64	**e.** Overhaul the tail rotor hub assembly.		
BHT-ALL-SPM	**f.** Inspect oil cooler fan impeller for visible distortion or cracks of the brazed vane joints using dye penetrant inspection method.		
Rolls-Royce 250-C28 Series Operation and Maintenance Manual, 16W2 (Rolls-Royce 250-C30 Series Operation and Maintenance Manual, 14W2 for 206L1 Engine Upgrade and 206L1+ IGW Upgrade)	**2.** Engine. Refer to the applicable Rolls-Royce Series Operation and Maintenance Manual.		

CONDITIONAL INSPECTIONS

5-55. OVERTORQUE

DATA REFERENCE	INSPECTION TASK DESCRIPTION	INITIAL MECH	INITIAL OTHER
	DATE: _____ **W.O.** _____ **FACILITY:** _____ **HELICOPTER S/N:** _____ **REGISTRY NO.:** _____ **TOTAL TIME:** _____ **SIGNATURE:** _____ **OVERTORQUE — 110 TO 120%** **NOTE** Components removed from a helicopter for evaluation following an overtorque shall be evaluated as an interrelated group. Removal records accompanying each component shall cross-reference part and serial numbers of other drive system components removed for evaluation. **NOTE** If overtorque above 100% up to 110% should occur, no inspection is required. **1.** If overtorque above 110% up to 120% should occur, perform the following: **a.** Conduct a visual inspection of the following listed assemblies (installed on the helicopter) for any evidence of damage, deformation, yielding, etc. **(1)** Main rotor blades and attachments. Blade for skin wrinkles and bond separation. If any indications of wrinkles or deformation exists, send blades to a Bell Helicopter Textron approved blade repair facility for evaluation. **(2)** Main rotor hub assembly.		

CONDITIONAL INSPECTIONS

5-55. OVERTORQUE (CONT)

DATA REFERENCE	INSPECTION TASK DESCRIPTION	INITIAL MECH	INITIAL OTHER
	(3) Transmission top case. **(4)** Transmission mount fittings at upper attachment points and lower stop mounts. **(5)** Cabin roof and beam at transmission restraint support assembly attachment points. **(6)** Cabin roof and beam at nodal beam support attachment points. **(7)** Tail rotor hub, blades, and attachments. **b.** Examine the transmission electric chip detectors for accumulated material. **c.** Remove, disassemble, and inspect main driveshaft couplings for indications of wear and overheating (grease lubricated). For 206L1+ IGW Upgrade helicopters, remove and examine the engine to transmission KAflex driveshaft for deformation and cracks. If deformation, cracks, or other damage is found, discard the driveshaft. **CAUTION** A QUALIFIED PERSON MUST BE AT THE HELICOPTER CONTROLS DURING THE FOLLOWING PROCEDURE.		
BHT-206L1-FM-1 (BHT-206L3-FM-1 for 206L1 Engine Upgrade and BHT-206L4-FM-1 for 206L1+ IGW Upgrade helicopters)	**d.** Start engine and check main rotor, while in a flat pitch condition, for any evidence of a 1/rev vibration or lateral vibration.		
BHT-206A/B/L-Series-CR&O, Chapter 63	**e.** If one or more of the previous inspection requirements, step a through step d, reveals an unsatisfactory condition, a mast runout inspection shall be performed.		

CONDITIONAL INSPECTIONS

5-55. OVERTORQUE (CONT)

DATA REFERENCE	INSPECTION TASK DESCRIPTION	INITIAL MECH	INITIAL OTHER
Rolls-Royce 250-C28 Series Operation and Maintenance Manual, 14W2 (Rolls-Royce 250-C30 Series Operation and Maintenance Manual, 14W2 for 206L1 Engine Upgrade and 206L1+ IGW Upgrade)	**2.** Refer to the applicable Rolls-Royce Operational and Maintenance Manual for applicable inspection. **3.** After the first 25 hours following an overtorque, conduct a thorough visual inspection of the following: **a.** Main rotor blades and attachments. **b.** Main rotor hub assembly. **c.** Main rotor mast. **d.** Transmission top case. **e.** Transmission mount link assemblies, link attachments, and arm and support assemblies. **f.** Cabin roof shell and beam at transmission mount attachment points. **g.** Transmission restraint attachment at stop mounts, support, and cabin roof shell and beam. **h.** Transmission electric chip detectors. **i.** Tail rotor gearbox chip detector and gearbox attachments. **j.** Tail rotor hub, blades, and attachments.		

CONDITIONAL INSPECTIONS

5-55. OVERTORQUE (CONT)

DATA REFERENCE	INSPECTION TASK DESCRIPTION	INITIAL MECH	INITIAL OTHER
	OVERTORQUE — ABOVE 120% **NOTE** Components removed from helicopter for evaluation following an overtorque shall be evaluated as an interrelated group. Removal records accompanying each component shall cross-reference part and serial numbers of other drive system components removed for evaluation. **NOTE** The overhaul inspection criteria in the specific sections, including limit charts and other pertinent information, should be used to establish that the detail parts in each assembly are dimensionally within limits and have not yielded or become deformed. **1.** If an overtorque above 120% occurs, accomplish all inspections required for overtorque — 110 to 120% and in addition, conduct following inspection: **a.** Main Rotor Hub. Remove and overhaul in accordance with the Conditional Inspection criteria. **b.** Main Rotor Mast. Remove and overhaul. **c.** Main Transmission. Remove and overhaul. Replace top case of main transmission and transmission link attachments. During overhaul, inspect gear patterns for shifting and scuffing. **d.** Remove and overhaul main driveshaft (grease lubricated). For 206L1+ IGW Upgrade helicopters, remove and examine KAflex driveshaft for deformation and cracks. If deformation or cracks are found, discard the driveshaft. **e.** Freewheel assembly. Remove and overhaul.		

CONDITIONAL INSPECTIONS

5-55. OVERTORQUE (CONT)

DATA REFERENCE	INSPECTION TASK DESCRIPTION	INITIAL MECH	INITIAL OTHER
Rolls-Royce 250-C28 Series Operation and Maintenance Manual, 16W2 (Rolls-Royce 250-C30 Series Operation and Maintenance manual, 14W2 for 206L1 Engine Upgrade and 106L1+ IGW Upgrade)	**2.** Refer to applicable Rolls-Royce Operation and Maintenance Manual for applicable inspection.		
	3. After the first 25 hours following an overtorque, conduct a thorough visual inspection of the following: **a.** Main rotor blades and attachments. **b.** Main rotor hub assembly. **c.** Main rotor mast. **d.** Transmission top case. **e.** Transmission spindles, pylon support links, and mount fittings. **f.** Cabin roof shell and beam at transmission mount attachment points. **g.** Transmission restraint attachment. **h.** Transmission electric chip detectors. **i.** Tail rotor gearbox chip detectors and gearbox attachments. **j.** Tail rotor hub, blades, and attachments.		

CONDITIONAL INSPECTIONS

5-56. ENGINE COMPRESSOR STALL OR SURGE

DATA REFERENCE	INSPECTION TASK DESCRIPTION	INITIAL MECH	INITIAL OTHER
	DATE: _____ **W.O.** _____ **FACILITY:** _____ **HELICOPTER S/N:** _____ **REGISTRY NO.:** _____ **TOTAL TIME:** _____ **SIGNATURE:** _____ An engine compressor stall or surge can be described as a sharp rumble, a series of loud sharp pops, severe engine vibration, or a rapid rise in Turbine Outlet Temperature (TOT) depending on the severity of stall or surge. When a stall or surge is suspected, follow steps as dictated by reported conditions. The components removed from the helicopter for evaluation following a compressor stall or surge shall be evaluated as a matched group. The records accompanying each component shall cross-reference part and serial numbers of other drive system components removed for evaluation. **1.** Obtain a pilot's report of the circumstances related to the suspected compressor stall or surge to determine if it corresponds to one of the following conditions: • If the stall or surge occurred on the ground or in flight at any N_R speed or torque setting and there was no noticeable yaw of the helicopter, do Part I and Part II of this inspection. • If the stall or surge occurred on the ground or in flight at any N_R speed or torque setting and there was a noticeable yaw of the helicopter, do Part I, Part II, and Part III of this inspection.		

CONDITIONAL INSPECTIONS

5-56. ENGINE COMPRESSOR STALL OR SURGE (CONT)

DATA REFERENCE	INSPECTION TASK DESCRIPTION	INITIAL MECH	INITIAL OTHER
	PART I: INVESTIGATE CAUSE OF COMPRESSOR STALL OR SURGE		
	POWER PLANT		
Rolls-Royce 250-C28 Series Operation and Maintenance Manual, 16W2 (Rolls-Royce 250-C30 Series Operation and Maintenance Manual, 14W2 for 206L1 Engine Upgrade and 206L1+ IGW Upgrade)	**1.** Examine the induction fairing for blockage. If the induction fairing is found obstructed, refer to appropriate Rolls-Royce Operation and Maintenance Manual for further maintenance action. If no blockage is found, do step 2.		
	2. Remove the induction fairing and examine the compressor intake area as follows: • The compressor rotor for contamination. If contamination is found, perform a compressor wash. Refer to applicable BHT-206L1-MM, Chapter 71. • Inspect compressor rotor for foreign object damages in accordance with appropriate Rolls-Royce Operation and Maintenance Manual for proper action.		
	3. If step 1 and step 2 do not reveal an obvious cause for stall or surge, refer to appropriate Rolls-Royce Operation and Maintenance Manual for further maintenance action.		

CONDITIONAL INSPECTIONS

5-56. ENGINE COMPRESSOR STALL OR SURGE (CONT)

DATA REFERENCE	INSPECTION TASK DESCRIPTION	INITIAL MECH	INITIAL OTHER
	NOTE Removal or dismantling of components is not required while performing the following inspection.		
Chapter 66	**PART II: INSPECTION FOR COMPRESSOR STALL OR SURGE WITHOUT NOTICEABLE YAW** **DRIVE SYSTEM** **1.** Examine the chip detectors of the transmission, freewheel assembly, and the tail rotor gearbox. If the chip detector shows signs of metal particles, perform a serviceability check. Components that fail the serviceability check shall be removed. Make an entry on the applicable components Historical Service Record and attach a tag and write, “THIS COMPONENT WAS REMOVED FROM SERVICE BECAUSE OF A COMPRESSOR STALL/SURGE”. Send the component to an approved facility for overhaul. **2.** Examine the tail rotor driveshafts for condition and security of attachment. **3.** Examine the tail rotor disc pack couplings for cracks or gapping greater than 0.015 inch (0.38 mm). **4.** Examine the tail rotor steel driveshaft and adapters for structural failure or distortion exceeding specified limits. **5.** Examine the bond lines on all bonded tail rotor driveshaft adapters (if installed) for any evidence of cracks and voids. **6.** If any defect is detected in step 2 through step 5, all bonded tail rotor driveshafts shall be considered unserviceable and discarded. **7.** Examine the tail rotor driveshaft segments having riveted adapters (if installed) for condition. **8.** Examine the oil cooler shaft and forward short shaft for condition. **9.** Examine the engine-to-transmission driveshaft for condition.		

CONDITIONAL INSPECTIONS

5-56. ENGINE COMPRESSOR STALL OR SURGE (CONT)

DATA REFERENCE	INSPECTION TASK DESCRIPTION	INITIAL MECH	INITIAL OTHER
	10. If no defects were detected that may have been caused by the compressor stall or surge, all drivetrain components are serviceable.		
Chapter 65	**ROTATING CONTROL SYSTEM**		
	1. Examine the swashplate and support assembly, swashplate drive components, the tail rotor pitch change mechanism, and all rotating controls (main and tail). Replace any unserviceable parts as necessary.		
Chapter 65	**TAIL ROTOR HUB AND BLADES**		
BHT-206L-CR&O	**1.** Examine the tail rotor hub assembly for condition. If any damage suspected to be related to the stall or surge is found, remove the tail rotor hub assembly. Make an entry on the Historical Service Record and attach a tag on the tail rotor hub assembly and write, "THIS COMPONENT WAS REMOVED FROM SERVICE BECAUSE OF A COMPRESSOR STALL OR SURGE". Send the hub to an approved facility for overhaul.		
	2. Examine the tail rotor blade(s) for condition. If any damage suspected to be related to the stall or surge is found, remove both of the tail rotor blade(s). Make an entry on the Historical Service Record and attach a tag on the tail rotor blade(s) and write "THIS BLADE WAS REMOVED FROM SERVICE BECAUSE OF A COMPRESSOR STALL OR SURGE". Send the tail rotor blade(s) assembly to a Bell Helicopter Textron approved rotor blade repair facility for further inspection and repair.		
	3. Examine the tail rotor blade bolts for security of attachment. If damage suspected to be related to the stall or surge is found, discard them.		
	4. If any defect is detected in step 1 through step 3, all bonded tail rotor driveshafts shall be considered unserviceable and discarded.		
Chapter 65	**MAIN ROTOR HUB AND BLADES**		
	1. Examine the main rotor blades for damage. Check for wrinkled skin, delamination, deformation, and cracks.		

CONDITIONAL INSPECTIONS

5-56. ENGINE COMPRESSOR STALL OR SURGE (CONT)

DATA REFERENCE	INSPECTION TASK DESCRIPTION	INITIAL MECH	INITIAL OTHER
BHT-206L-CR&O	**2.** If any blade has visible damage suspected to be related to the stall or surge, make an entry on the Historical Service Record and attach a tag on blades and write, "THIS BLADE WAS REMOVED FROM SERVICE BECAUSE OF A COMPRESSOR STALL/SURGE." Send the blade(s) to a Bell Helicopter Textron approved rotor blade repair facility for further inspection and repair. **3.** If no defects were detected on any blade, the blade(s) are serviceable. **NOTE** This inspection does not require disassembly or removal from the helicopter. **4.** Examine the main rotor hub for condition. If any damage is suspected to be related to the stall or surge, remove the main rotor hub assembly. Make an entry on the Historical Service Record and attach a tag on the main rotor hub and write, "THIS MAIN ROTOR HUB ASSEMBLY WAS REMOVED FROM SERVICE BECAUSE OF A COMPRESSOR STALL/SURGE." Send the component to an approved facility for overhaul. **5.** If no defects were detected on main rotor hub, the main rotor hub is serviceable. **6.** If defects are detected in step 1, step 2, and step 4 through step 5, discard all bonded tail rotor driveshafts and perform a main rotor sudden stoppage inspection. **SPECIAL INSPECTION** After 25 hours of operation, examine chip detectors of transmission, freewheel assembly, and tail rotor gearbox. If the chip detector shows signs of metal particles, perform a serviceability check. Components that fail the serviceability check shall be removed. Make an entry on the applicable components Historical Service Record and attach a tag and write “THIS COMPONENT WAS REMOVED FROM SERVICE BECAUSE OF A COMPRESSOR STALL/SURGE”. Send the component to an approved facility for overhaul.		

CONDITIONAL INSPECTIONS

5-56. ENGINE COMPRESSOR STALL OR SURGE (CONT)

DATA REFERENCE	INSPECTION TASK DESCRIPTION	INITIAL MECH	INITIAL OTHER
	PART III: INSPECTION FOR COMPRESSOR STALL OR SURGE WITH NOTICEABLE YAW **CAUTION** WHEN A COMPRESSOR STALL OR SURGE WITH NOTICEABLE YAW HAS OCCURRED, DISCARD ALL TAIL ROTOR BONDED DRIVESHAFTS.		
Chapter 66	**ENGINE-TO-TRANSMISSION DRIVESHAFT (APPLICABLE TO 206L1 AND 206L1 ENGINE UPGRADE)**		
BHT-206L-CR&O	**1.** Remove and disassemble the engine-to-transmission driveshaft. **2.** Inspect inner and outer coupling teeth splines for damage. **3.** If any damage suspected to be related to the stall or surge, make an entry on the Historical Service Record and attached a tag on the driveshaft and write, “THIS COMPONENT WAS REMOVED FORM SERVICE BECAUSE OF A COMPRESSOR STALL”. Send the driveshaft to an approved facility for overhaul. **4.** If no defects were detected on the couplings, re-assemble and return the engine-to-transmission driveshaft to service.		
Chapter 66	**ENGINE-TO-TRANSMISSION KAFLEX DRIVESHAFT (APPLICABLE TO 206L1+ IGW UPGRADE)**		
BHT-206L-CR&O	**1.** Remove and examine the engine-to-transmission for condition. **2.** If any damage suspected to be related to the stall or surge, make an entry on the Historical Service Record and attached a tag on the driveshaft and write, “THIS COMPONENT WAS REMOVED FORM SERVICE BECAUSE OF A COMPRESSOR STALL”. Send the driveshaft to Bell Helicopter Textron CPR for evaluation. **3.** If no defects were detected, return the engine-to-transmission KAflex driveshaft to service.		

CONDITIONAL INSPECTIONS

5-56. ENGINE COMPRESSOR STALL OR SURGE (CONT)

DATA REFERENCE	INSPECTION TASK DESCRIPTION	INITIAL MECH	INITIAL OTHER
	TRANSMISSION ASSEMBLY		
BHT-206L-CR&O	**1.** Remove the transmission input pinion and triplex bearing. **2.** Inspect the following gear teeth for scoring and other mechanical damage. **a.** Input pinion gear. **b.** Main input driven bevel gear. **3.** If any damage suspected to be related to the stall or surge is found, make an entry on the Historical Service Record and attached a tag on the transmission assembly and write, “THIS COMPONENT WAS REMOVED FROM SERVICE BECAUSE OF A COMPRESSOR STALL”. Send the component to an approved facility for overhaul. **4.** If no defects were detected on the gears, the transmission assembly is serviceable.		
	TAIL ROTOR GEARBOX		
BHT-206L-CR&O	**1.** Remove the tail rotor gearbox input pinion. **2.** Inspect the following gear teeth for scoring and other mechanical damage. **a.** Input pinion gear. **b.** Spiral bevel gear. **3.** If any damage suspected to be related to the stall or surge is found, make an entry on the Historical Service Record and attach a tag on the tail rotor gearbox and write, “THIS COMPONENT WAS REMOVED FROM SERVICE BECAUSE OF A COMPRESSOR STALL”. Send the tail rotor gearbox to an approved facility for overhaul. **4.** If no defects were detected on the gears, the tail rotor gearbox is serviceable.		

CONDITIONAL INSPECTIONS

5-56. ENGINE COMPRESSOR STALL OR SURGE (CONT)

DATA REFERENCE	INSPECTION TASK DESCRIPTION	INITIAL MECH	INITIAL OTHER
Chapter 53	**FUSELAGE** **1.** Examine the complete tailboom structure for distortion, buckles, cracks in the skin, and sheared or loose rivets. **2.** Inspect tailboom attachment fittings for cracks. **3.** Inspect the vertical fin for condition and security of attachment.		
Chapter 66 BHT-206L1-FM-1 (BHT-206L3-FM-1 for 206L1 Engine Upgrade and BHT-206L4-FM-1 for 206L1+ IGW Upgrade helicopters)	**GROUND RUN** **1.** Perform a ground run for a minimum of 30 minutes with the helicopter light on its skids. Remove and examine the chip detectors of the transmission assembly, freewheel assembly, and tail rotor gearbox. **2.** If the chip detector shows signs of metal particles, perform a serviceability check. Components that fail the serviceability check shall be removed. Make an entry on the applicable components Historical Service Record and attach a tag and write, “THIS COMPONENT WAS REMOVED FROM SERVICE BECAUSE OF A COMPRESSOR STALL/SURGE”. Send the component to a Bell Helicopter Textron approved facility for overhaul. **3.** If no metal particles were found, the transmission assembly, freewheel assembly, and/or tail rotor gearbox are serviceable.		

CONDITIONAL INSPECTIONS

5-57. LIGHTNING STRIKE

DATA REFERENCE	INSPECTION TASK DESCRIPTION	INITIAL MECH	INITIAL OTHER
	DATE: _____ **W.O.** _____ **FACILITY:** _____ **HELICOPTER S/N:** _____ **REGISTRY NO.:** _____ **TOTAL TIME:** _____ **SIGNATURE:** _____ **NOTE** This inspection must be accomplished after helicopter is suspected of receiving a lightning strike. **LIGHTNING STRIKE** **NOTE** In all of the following instances, if significant damage has been found in any area, inspection shall be expanded in those areas until it extends beyond the zone of damage. Scrap any component that shows evidence of severe arc burns. Because lightning behavior is difficult to predict, conduct a thorough inspection of the entire helicopter. Lightning damage may appear as burn marks, heat discoloration, arc marks, or small weld marks (where metal has melted and resolidified). Honeycomb and other composite materials may exhibit delamination.		

CONDITIONAL INSPECTIONS

5-57. LIGHTNING STRIKE (CONT)

DATA REFERENCE	INSPECTION TASK DESCRIPTION	INITIAL MECH	INITIAL OTHER
	1. Visually inspect all external surfaces of the helicopter paying particular attention to main rotor blades and hub, main rotor mast and controls, transmission and mounts, power plant and mounts, main and tail rotor driveshafting, tail rotor gearbox, tail rotor blades and hub, vertical fin, and horizontal stabilizer. Inspect landing gear skid tubes, crosstubes, and their fuselage attachment points. Check electrical instruments and systems. Check standby compass for erroneous indications. Remove and overhaul defective and/or damaged electrical instruments and systems. **2.** If visual indications of damage are present, proceed as follows: **NOTE** Evaluate components removed from a helicopter following a lightning strike as an interrelated group. Make entries in component records to cross-reference part and serial numbers of other drive system components removed for evaluation. **a.** Inspect main rotor blades. Blades that exhibit severe arcing shall be scrapped. Blades that exhibit light to moderate arcing shall be returned to a Bell Helicopter Textron approved blade repair facility for evaluation. **(1)** Inspect blades for signs of burns and arcing at tip cap, root end closure, buffer pads, and blade bolt bushings. Burn marks can be very minute. **(2)** Inspect main rotor blade bonded areas for debonding. **b.** Remove main rotor hub for overhaul. State lightning strike as reason for removal. **c.** Remove swashplate and support assembly for overhaul. State lightning strike as reason for removal. **d.** Remove main driveshaft, freewheel assembly, transmission, and mast assembly for overhaul making note of lightning strike as reason for removal.		

CONDITIONAL INSPECTIONS

5-57. LIGHTNING STRIKE (CONT)

DATA REFERENCE	INSPECTION TASK DESCRIPTION	INITIAL MECH	INITIAL OTHER
	e. Inspect nodal beam, transmission mount fittings, and engine mounts.		
BHT-206L-CR&O	**(1)** Visually inspect exterior surfaces for evidence of arcing or burning. Special attention should be given to contact surfaces of transmission and engine to their mounting systems, and of mounting systems to the airframe.		
	(2) If indications of arcing or burning are present, overhaul parts.		
	f. Inspect tail rotor blades and hub. Scrap blades if indications of burns or debonding. Remove tail rotor hub for overhaul. State lightning strike as reason for removal.		
	g. Remove tail rotor driveshaft bearing hangers and tail rotor gearbox and return for overhaul. State lightning strike as reason for removal.		
	h. Check auxiliary fins for evidence of burning or debonding.		
	i. Inspect tailboom fitting for indication of arcing burns around mounting points of tail rotor gearbox and vertical fin.		
Rolls-Royce 250-C28 Series Operation and Maintenance Manual, 16W2 (Rolls-Royce 250-C30 Series Operation and Maintenance Manual, 14W2 for 206L1 Engine Upgrade and 206L1+ IGW Upgrade)	**j.** Inspect power plant assembly.		
	3. If no indications of damage are found, do the following:		

CONDITIONAL INSPECTIONS

5-57. LIGHTNING STRIKE (CONT)

DATA REFERENCE	INSPECTION TASK DESCRIPTION	INITIAL MECH	INITIAL OTHER
	NOTE If no visual indications of damage are present, check all ferrous dynamic components by magnetometer. If magnetism is present, perform procedure indicated in step 2. Demagnetize all parts.		
BHT-206L-CR&O	**a.** Remove main rotor hub and blade assembly. Remove main rotor grips.		
	(1) Visually inspect needle bearings for signs of electrical arcing, burning, or delamination.		
	(2) Visually check pitch horns and trunnion bearing connections for arcing burns.		
BHT-206L-CR&O	**(3)** If indications of arcing or burning are present, overhaul main rotor hub assembly and scrap pitch links and all attaching hardware.		
BHT-206L-CR&O	**(4)** If no indications are found, reassemble main rotor hub.		
	b. Remove main rotor mast assembly. Without removing bearing from mast, inspect visible portions of the bearing for signs of electrical arcing or burning. Rotate bearing during inspection. Check bearing for smooth rotation. Visually inspect the lower mast bearing race and driving spline on the mast for signs of arcing or burning. If indications of arcing, burning, or roughness of the bearing are present, transmission, mast assembly, and freewheel assembly shall be returned for overhaul. State lightning strike as reason for removal.		
	c. Remove transmission top case and inspect for entry and exit of lightning strike. Special attention should be given to the planetary pinion and sun gear, ring gear, spiral bevel gear, and quill pinion. Check all bearings for smooth rotation and damage. If evidence of arcing or burning is found or bearings do not rotate smoothly, remove gearbox and return for overhaul, stating lighting strike as reason for removal. Scrap all parts that exhibit signs of arcing.		
BHT-206L-CR&O	**(1)** If no indications of arcing are found, reassemble transmission and mast assembly and return to limited service.		

CONDITIONAL INSPECTIONS

5-57. LIGHTNING STRIKE (CONT)

DATA REFERENCE	INSPECTION TASK DESCRIPTION	INITIAL MECH	INITIAL OTHER
	(2) After 5 hours, remove the chip detectors and filter and inspect for chips.		
	(a) If no chip indications are found, return transmission to full service.		
	(b) If chip indications are found, remove transmission, mast assembly, and freewheel assembly and return for overhaul. State lightning strike as reason for removal. Scrap all parts that exhibit signs of arcing.		
	d. Inspect nodal beam, transmission mount fittings, and engine mounts.		
	(1) Visually inspect exterior surfaces for evidence of arcing or burning. Special attention should be given to contact surfaces of transmission and engine to their mounting systems, and of mounting systems to the airframe.		
BHT-206L-CR&O	**(2)** If indications of arcing or burning are present, overhaul parts.		
	e. Remove input quill assembly from tail rotor gearbox. Visually inspect gear teeth for signs of electrical arcing or burning. Rotate tail rotor mast to check for smooth rotation of bearings.		
	(1) If evidence of arcing or burning is found or if bearings do not rotate smoothly, remove gearbox and return it for overhaul. State lightning strike as reason for removal.		
BHT-206L-CR&O	**(2)** If no indications of damage are found and bearings rotate smoothly, reassemble gearbox and return it to limited service. After 5 hours, remove chip detector and inspect for chips. If no chip indications are found, return gearbox to full service. If chip indications are found, return gearbox for overhaul. State lightning strike as reason for removal.		

CONDITIONAL INSPECTIONS

5-57. LIGHTNING STRIKE (CONT)

DATA REFERENCE	INSPECTION TASK DESCRIPTION	INITIAL MECH	INITIAL OTHER
	f. Inspect main driveshaft male and female couplings for evidence of arcing or burning on all gear teeth. If no evidence of arcing is found, assemble driveshaft and return to service. Parts that exhibit arcing or burning shall be scrapped. If indications of arcing or burning are found on the main driveshaft or on any component of the tail rotor driveshaft installation, return freewheel assembly for overhaul. State lightning strike as reason for removal. On 206L1+ IGW Upgrade helicopters, inspect KAflex main driveshaft for evidence of arcing or burning. If no evidence of arcing or burning is found, return to service. Shafts that exhibit arcing or burning shall be scrapped.		
BHT-206L-CR&O	**g.** Disassemble swashplate and support assembly. Visually inspect for evidence of burning or arcing. Inspect bearings for smooth rotation and all hardware for evidence of arcing.		
BHT-206L-CR&O	**(1)** If indications of arcing or burning are present or bearings do not rotate smoothly, overhaul swashplate assembly. Replace the affected hardware.		
BHT-206L-CR&O	**(2)** If no indications are found, reassemble the swashplate assembly and return to service.		
	h. Inspect tailboom, horizontal stabilizer, auxiliary fins, and vertical fin for evidence of arcing, burning, or debonding paying particular attention to area around the mounting points for the tail rotor driveshaft hangers and tail rotor gearbox.		
Rolls-Royce 250-C28 Series Operation and Maintenance Manual, 16W2 (Rolls-Royce 250-C30 Series Operation and Maintenance Manual, 14W2 for 206L1 Engine Upgrade and 206L1+ IGW Upgrade)	**i.** Inspect power plant assembly.		

CONDITIONAL INSPECTIONS

5-58. ENGINE OVERTEMP

DATA REFERENCE	INSPECTION TASK DESCRIPTION	INITIAL MECH	INITIAL OTHER
	DATE: _____ **W.O.** _____ **FACILITY:** _____ **HELICOPTER S/N:** _____ **REGISTRY NO.:** _____ **TOTAL TIME:** _____ **SIGNATURE:** _____		
	ENGINE OVERTEMP — Inspect		
Rolls-Royce 250-C28 Series Operation and Maintenance Manual, 16W2 (Rolls-Royce 250-C30P Operation and Maintenance Manual, 14W2 for 206L1 Engine Upgrade and 206L1+ IGW Upgrade)	**1.** Perform hot end inspection of power plant assembly if Start or Transient Turbine Outlet Temperature Limits have been exceeded.		

CONDITIONAL INSPECTIONS

5-59. STRIKE IMPACT TO AUXILIARY FINLETS BY MAIN ROTOR BLADES

DATA REFERENCE	INSPECTION TASK DESCRIPTION	INITIAL MECH	INITIAL OTHER
	DATE: _____ **W.O.** _____ **FACILITY:** _____ **HELICOPTER S/N:** _____ **REGISTRY NO.:** _____ **TOTAL TIME:** _____ **SIGNATURE:** _____ **STRIKE IMPACT TO AUXILIARY FINLETS BY MAIN ROTOR BLADES** A strike impact to the auxiliary finlets by main rotor blades is an incident in which a main rotor blade collides with either one or both auxiliary finlets and leaves a noticeable damage to either a main rotor blade or an auxiliary finlet. When a strike impact has occurred, do the steps that follow: **MAIN ROTOR BLADES** **1.** Examine if a main rotor blade has contacted the tail rotor driveshaft cover. If the tail rotor driveshaft cover is damaged, do the conditional inspections listed in SUDDEN STOPPAGE - MAIN ROTOR - POWER “ON” or “OFF”. If not, do the steps that follow: **2.** Examine the blade skin and bonded doublers for visible damage. **3.** If a damage to a blade cannot be repaired per BHT-206L1-MM-1, remove it. Put a tag on the blade and write “THIS BLADE WAS REMOVED FROM SERVICE BECAUSE OF STRIKE IMPACT TO AUXILIARY FINLETS”. Send the blade to an approved facility for repair. **4.** If you do not find damage on the blade, the blade is serviceable.		

CONDITIONAL INSPECTIONS

5-59. STRIKE IMPACT TO AUXILIARY FINLETS BY MAIN ROTOR BLADES (Cont)

DATA REFERENCE	INSPECTION TASK DESCRIPTION	INITIAL MECH	INITIAL OTHER
	AUXILARY FINLETS If the upper end of the finlets has a strike damage, put a tag on the auxiliary finlet and write “THIS AUXILIARY FINLET WAS REMOVED FROM SERVICE BECAUSE OF STRIKE IMPACT FROM A MAIN ROTOR BLADE”. Fill out a structural repair request per IL GEN-04-96 or Section 2 of the BHT-ALL-SRM and forward to Product Support Engineering (PSE) for repair evaluation. **HORIZONTAL STABILIZER** **1.** For horizontal stabilizer not equipped with end finlet fittings 206-021-103-ALL, do the steps that follow: **a.** If an auxiliary finlet is damaged due to a main rotor strike, remove the horizontal stabilizer for inspection. **b.** Examine the external surface for skin deformation, bucking, or cracks. **c.** Examine all inserts for looseness and bond condition. **d.** If the horizontal stabilizer is beyond the repairs described in Chapter 53, put a tag on it and write “THIS HORIZONTAL STABILIZER WAS REMOVED FROM SERVICE BECAUSE OF STRIKE IMPACT FROM MAIN ROTOR BLADE TO THE FINLETS”. Fill a structural repair request per IL GEN-04-96 or Section 2 of the BHT-ALL-SRM and forward to PSE for a repair evaluation. **2.** For horizontal stabilizer equipped with end finlet fittings 206-021-103-ALL, do the steps that follow: **a.** If an auxiliary finlet is damaged due to a main rotor strike, remove the horizontal stabilizer for inspection. **b.** Examine the external surface for skin deformation, bucking, or cracks. **c.** Examine all inserts for looseness and bond condition. **d.** Examine the end fitting fasteners for condition.		

CONDITIONAL INSPECTIONS

5-59. STRIKE IMPACT TO AUXILIARY FINLETS BY MAIN ROTOR BLADES (Cont)

DATA REFERENCE	INSPECTION TASK DESCRIPTION	INITIAL MECH	INITIAL OTHER
	e. Remove damaged finlets and do an Eddy current inspection to its adjacent end fitting of the horizontal stabilizer. If one of the end fittings fails the Eddy current inspection, discard the horizontal stabilizer. **f.** If the end fitting has no damage but the damage to the horizontal stabilizer is more than the repairs described in Chapter 53, put a tag on it and write “THIS HORIZONTAL STABILIZER WAS REMOVED FROM SERVICE BECAUSE OF STRIKE IMPACT FROM THE MAIN ROTOR BLADE TO THE FINLETS”. Fill out a structural repair request per IL GEN 04-96 or Section 2 of the BHT-ALL-SRM and forward to PSE for a repair evaluation. **TAILBOOM** **1.** Examine all closing plates and support angles of horizontal stabilizer for deformation or cracks. **2.** Examine the tailboom skin aperture of horizontal stabilizer for waviness, deformation, bucking, or cracks. If the damage to the skin is more than the repairs described in Chapter 53, put a tag on the tailboom and write “THIS TAILBOOM WAS REMOVED FROM SERVICE BECAUSE OF STRIKE IMPACT FROM MAIN ROTOR BLADE TO THE FINLETS”. Fill out a structural repair request per IL GEN-04-96 or Section 2 of the BHT-ALL-SRM and forward to PSE for repair evaluation.		

5-60. COMPONENT OVERHAUL SCHEDULE

The Component Overhaul Schedule (Table 5-4) gives the time interval between overhaul for each applicable helicopter component.

WARNING

DO NOT APPLY TOLERANCES TO PARTS WITH A LIMITED AIRWORTHINESS LIFE (CHAPTER 4).

WARNING

DO NOT GO MORE THAN RETIREMENT LIFE FOR CRITICAL COMPONENTS. REFER TO AIRWORTHINESS LIMITATIONS SCHEDULE (CHAPTER 4).

SOME PARTS INSTALLED AS ORIGINAL EQUIPMENT ON MILITARY HELICOPTERS CAN HAVE A LOWER AIRWORTHINESS LIFE AND/OR OVERHAUL SCHEDULE THAN WHEN USED ON A COMMERCIAL HELICOPTER. CONSEQUENTLY, PARTS THAT HAVE BEEN USED ON MILITARY HELICOPTERS MUST NOT BE USED ON COMMERCIAL HELICOPTERS.

CAUTION

OVERHAUL SCHEDULE FOR SOME KIT COMPONENTS AND/OR PARTS IS NOT COVERED IN THIS SCHEDULE. REFER TO APPLICABLE SERVICE INSTRUCTIONS FOR KIT COMPONENTS SCHEDULE.

NOTE

Refer to paragraph 5-6 for information on inspection and overhaul tolerance.

NOTE

Neither assignment of a time period for overhaul of a component or failure to assign a time period for overhaul of a component constitutes a warranty of any kind. The only warranty applicable to helicopter and all components is that warranty included in the Purchase Agreement for the helicopter or component.

The overhaul interval specified for all given part numbers contained in this Component Overhaul Schedule applies to all successive dash numbers (or suffixes) for that item unless differently specified.

Table 5-4. Component Overhaul Schedule

NOMENCLATURE	PART NUMBER △1	OVERHAUL INTERVAL (HOURS)
MAIN ROTOR CONTROLS		
Swashplate and Support Assembly	206-010-450-011	4800 hours
MAIN ROTOR HUB		
Hub Assembly	206-011-100-025	1200 hours
Hub Assembly	206-011-100-025	△2 2400 hours

Table 5-4. Component Overhaul Schedule (Cont)

NOMENCLATURE	PART NUMBER △1	OVERHAUL INTERVAL (HOURS)
POWER TRAIN		
Transmission Assembly	206-040-004-005	4500 hours
Main Rotor Mast Assembly	206-040-014-003	△3 3000 hours
Freewheel Assembly	206-040-270-009	△4 2400 hours
Freewheel Assembly	206-040-270-009	△5 3000 hours
Input Driveshaft	206-340-300-101/-105	△6 2500 hours
Freewheel Assembly	406-040-500-113	△7 3000 hours
TAIL ROTOR SYSTEM		
Tail Rotor Hub Assembly	206-011-810-015	2400 hours
Tail Rotor Hub Assembly	206-011-810-125	2500 hours
Tail Rotor Gearbox	206-040-402-003	6000 hours
HYDRAULIC SYSTEM		
Hydraulic Servo Actuators	206-076-062-001	1200 hours
Hydraulic Servo Actuators	206-076-062-003/-005/-101	3600 hours
POWER PLANT		
Turboshaft Engine	250-C28	Refer to Rolls-Royce 250-C28 Series Operation and Maintenance Manual, 16W2
Turboshaft Engine	250-C30P	Refer to Rolls-Royce 250-C30 Series Operation and Maintenance Manual, 14W2 (206L1 Engine Upgrade and 206L1+ IGW Upgrade)
STARTER GENERATORS		
Starter Generator	ALL	1000 hours

NOTES:

△1 The operating time specified for overhaul of a given part number contained in this Component Overhaul Schedule applies to all successive dash numbers (or suffixes) for that item unless differently specified.

Table 5-4. Component Overhaul Schedule (Cont)

NOMENCLATURE	PART NUMBER △1	OVERHAUL INTERVAL (HOURS)

NOTES (CONT):

△2 Only main rotor hub assemblies with yoke 206-011-149-105 installed (TB 206L-91-159).

△3 Only main rotor mast assemblies with mast assembly 206-040-535-101 and subsequent installed.

△4 Freewheel assembly with clutch CL41742-1.

△5 Freewheel assembly with clutch CL42250-1.

△6 As applicable to 206L1+ IGW Upgrade Kit (BHT-206-SI-2052), input driveshafts 206-340-300-101/-105 must be overhauled at 5000 hours of operation and every 2500 hours of operation thereafter. Overhaul is to be done by Kamatics Corporation only. Return driveshaft to Bell Textron per Information Letter (IL) GEN-04-98.

△7 As applicable to 206L1+ IGW Upgrade Kit (BHT-206-SI-2052).