BHT-206L4-MM-1

# BELL 206L4

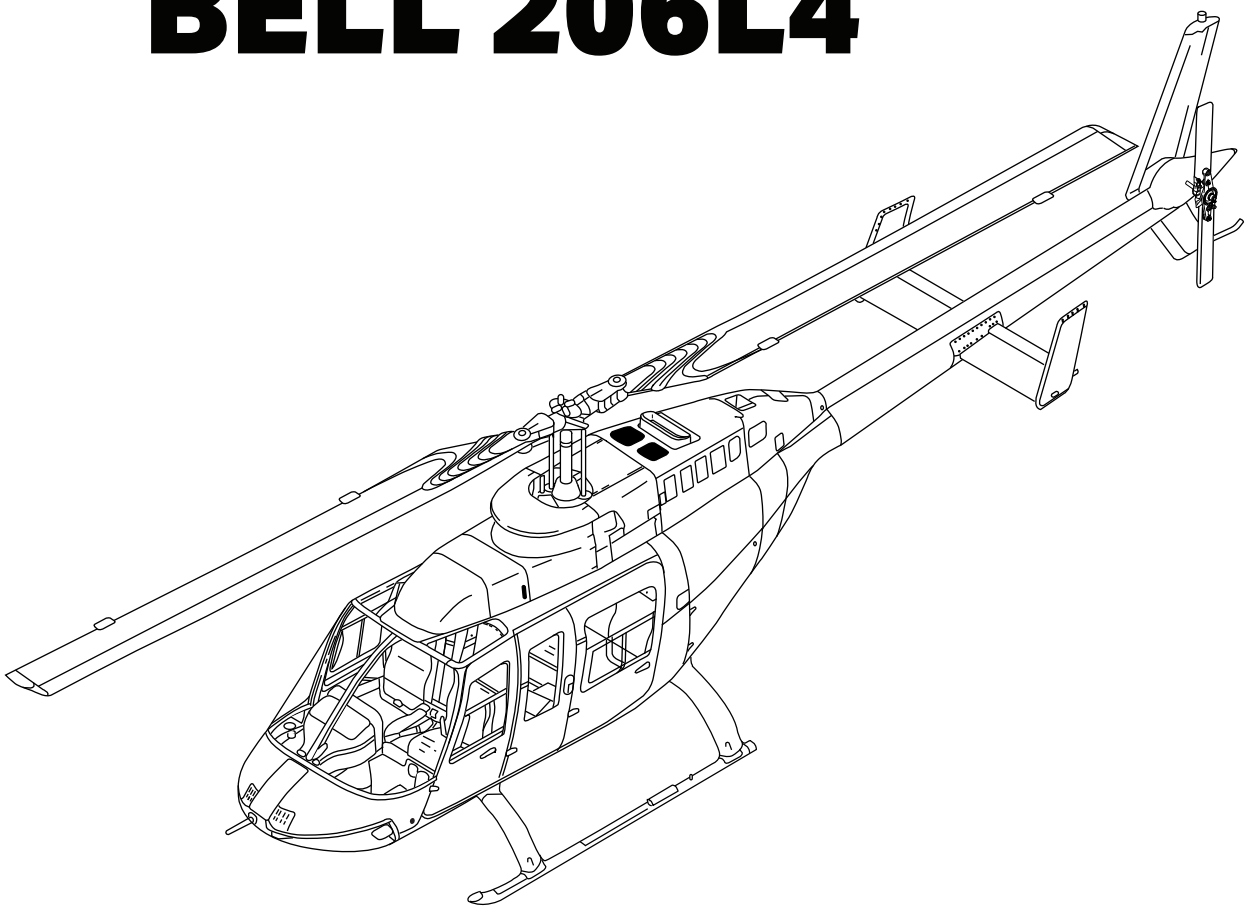

# MAINTENANCE MANUAL

# VOLUME 1

# GENERAL INFORMATION

**NOTICE**

The instructions set forth in this manual, as supplemented or modified by Alert Service Bulletins (ASB) or other directions issued by Bell Textron Inc. and Airworthiness Directives (AD) issued by the applicable regulatory agencies, shall be strictly followed.

COPYRIGHT NOTICE
COPYRIGHT 2026
BELL TEXTRON INC. AND
BELL TEXTRON CANADA LIMITED.

ALL RIGHTS RESERVED

POST OFFICE BOX 482 • FORT WORTH, TEXAS 76101

**REISSUE — 2 DECEMBER 1994**
**REVISION 29 — 10 JULY 2026**

**Export Classification C, ECCN EAR99**

## PROPRIETARY RIGHTS NOTICE

These data are proprietary to Bell Textron Inc. Disclosure, reproduction, or use of these data for any purpose other than helicopter operation or maintenance is forbidden without prior written authorization from Bell Textron Inc.

## DESTINATION CONTROL STATEMENT

WARNING — This document contains technical data whose export is restricted by the Arms Export Control Act (Title 22, U.S.C., Sec 2751, et. seq.) or the Export Administration Act of 1979, as amended, Title 50, U.S.C., App. 2401 et. seq. Violations of these export laws are subject to severe criminal penalties. Disseminate in accordance with provisions of DoD Directive 5230.25.

# WARNING

THIS MANUAL APPLIES ONLY TO HELICOPTERS AND COMPONENTS MAINTAINED IN ACCORDANCE WITH BELL HELICOPTER TEXTRON (BELL) APPROVED PROCEDURES USING BELL APPROVED PARTS.

ALL INSPECTION, REPAIR AND OVERHAUL PROCEDURES PUBLISHED BY BELL, INCLUDING PART RETIREMENT LIFE, ARE BASED SOLELY ON THE USE OF BELL PARTS THAT HAVE BEEN MAINTAINED USING BELL APPROVED DATA. THE DATA PUBLISHED HEREIN OR OTHERWISE SUPPLIED BY BELL IS NOT APPLICABLE TO NON-BELL PARTS OR PARTS THAT HAVE BEEN REPAIRED USING DATA AND/OR PROCESSES NOT APPROVED BY BELL.

BELL IS NOT RESPONSIBLE FOR ANY PART OTHER THAN THOSE THAT IT HAS APPROVED.

BEFORE PERFORMING ANY PROCEDURE CONTAINED IN THIS MANUAL YOU MUST INSPECT THE AFFECTED PARTS AND RECORDS FOR EVIDENCE OF ANY MANUFACTURE, REPAIR, REWORK OR USE OF A PROCESS NOT APPROVED BY BELL.

IF YOU IDENTIFY OR SUSPECT THE USE OF PARTS NOT AUTHORIZED BY BELL, EITHER REMOVE THE AFFECTED ITEM FROM THE AIRCRAFT OR OBTAIN INSTRUCTIONS FOR CONTINUED AIRWORTHINESS FROM THE MANUFACTURER OR THE ORGANIZATION THAT APPROVED THE REPAIR.

# CUSTOMER SUPPORT AND SERVICES

Flying smart means that no matter where you are, or what time it is, you can make a call and get additional information, clarification, or advice on a technical or operational issue concerning your helicopter or information contained in our Technical Publications. Product Support Engineering (PSE) is just a phone call away and may be contacted as follows:

**Model 206, 407, or 505**

Phone: 450-437-2862 or 800-363-8023 (U.S./Canada)

Fax: 450-433-0272

E-mail: productsupport@bellflight.com

**Model 222, 230, 427, 429, or 430**

Phone: 450-437-2077 or 800-463-3036 (U.S./Canada)

Fax: 450-433-0272

E-mail: productsupport@bellflight.com

**Model 204, 205, 212, or 412**

Phone: 450-437-6201 or 800-363-8028 (U.S./Canada)

Fax: 450-433-0272

E-mail: productsupport@bellflight.com

**Model 210, HUEY II, and All Bell's Active and Surplus Military Medium Helicopter Models**

Phone: 817-280-3548

Fax: 817-280-2635

E-mail: mts-medium@bellflight.com

**Model OH-58, TH-67, TH-57, Both Active and Surplus Military**

Phone: 817-280-3548

Fax: 817-280-2635

E-mail: mts-light@bellflight.com

For additional information on Customer Support and Services as well as Product Support Engineering (PSE) and your local Customer Service Engineering (CSE) network, please access http://www.bellflight.com/support-and-service/support.

# LOG OF REVISIONS

Insert latest revision pages and dispose of superseded ones.

On a revised page, the text and/or illustration affected by the latest revision is shown by a vertical line. A revised page with only a vertical line next to the page number indicates that text has shifted or that non-technical correction(s) were made on that page.

| | | |
|---|---|---|
| Original | 0 | 02 OCT 92 |
| Reissue | 0 | 02 DEC 94 |
| Revision | 1 | 21 APR 98 |
| Revision | 2 | 16 MAY 02 |
| Revision | 3 | 09 DEC 02 |
| Revision | 4 | 22 DEC 03 |
| Revision | 5 | 07 JUL 06 |
| Revision | 6 | 30 APR 08 |
| Revision | 7 | 26 MAY 09 |
| Revision | 8 | 25 SEP 09 |
| Revision | 9 | 30 NOV 09 |
| Revision | 10 | 23 DEC 09 |
| Revision | 11 | 31 AUG 10 |
| Revision | 12 | 27 SEP 10 |
| Revision | 13 | 25 FEB 11 |
| Revision | 14 | 08 APR 11 |
| Revision | 15 | 29 FEB 12 |
| Revision | 16 | 01 JUN 12 |
| Revision | 17 | 07 NOV 12 |
| Revision | 18 | 07 JUN 13 |
| Revision | 19 | 17 FEB 14 |
| Revision | 20 | 07 NOV 14 |
| Revision | 21 | 08 JAN 15 |
| Revision | 22 | 10 MAR 17 |
| Revision | 23 | 25 JUN 19 |
| Revision | 24 | 18 JUL 19 |
| Revision | 25 | 31 AUG 21 |
| Revision | 26 | 30 SEP 22 |
| Revision | 27 | 20 MAR 24 |
| Revision | 28 | 25 JUL 24 |
| Revision | 29 | 10 JUL 26 |

# LOG OF PAGES

| Page No. | Rev No. |
|---|---|
| **VOLUME 1** | |
| Cover | 27 |
| Title | 29 |
| PN | 27 |
| Warning | 25 |
| CSS | 23 |
| A – D | 29 |
| E/F | 29 |
| Help | 17 |
| Customer Feedback | 27 |
| Helicopter Sales Notice | 27 |
| Warranty Page 1 | 25 |
| Warranty Page 2 | 25 |
| Warranty Page 3 | 25 |
| BR | 25 |
| TR | 23 |
| i/ii | 23 |
| Chapter 1 | |
| 1/2 | 0 |
| 3 – 6 | 0 |
| Chapter 4 | |
| 1 – 3 | 23 |
| 4 | 29 |
| 5 – 6 | 23 |
| 7 | 29 |
| 8 | 27 |
| 9 – 12 | 23 |
| Chapter 5 | |
| 1 | 13 |
| 2 | 25 |
| 3 – 5 | 13 |
| 6 | 18 |
| 6A/6B | 18 |
| 7 | 13 |
| 8 – 9 | 18 |
| 10 | 24 |
| 11 – 12 | 28 |
| 13/14 | 28 |
| 15/16 | 13 |
| 17 | 13 |
| 18 | 20 |
| 19 – 23 | 13 |
| 24 | 18 |
| 25/26 | 18 |
| 27 | 13 |
| 28 | 24 |
| 29 | 13 |
| 30 | 14 |
| 31 – 44 | 13 |
| 45/46 | 13 |
| 47 – 48 | 13 |
| 49 – 50 | 28 |
| 50A/50B | 28 |
| 51 – 54 | 13 |
| 55 – 56 | 25 |
| 57 | 13 |
| 58 – 59 | 24 |
| 60 | 13 |
| 61 | 14 |
| 62 – 73 | 13 |
| 74 | 20 |
| 75/76 | 13 |
| 77 – 80 | 13 |
| 81/82 | 13 |
| 83 | 20 |
| 84 | 13 |
| 85 – 92 | 25 |
| 91/92 | 13 |
| 93 – 95 | 13 |
| 96 | 20 |
| 97/98 | 25 |
| 99/100 | 13 |
| 101 – 102 | 13 |
| 103 – 104 | 25 |
| 104A/104B | 25 |
| 105/106 | 16 |
| 107 | 13 |
| 108 – 110 | 20 |
| 111/112 | 18 |
| 113/114 | 20 |
| 115/116 | 13 |
| 117/118 | 28 |
| 119 – 120 | 16 |

# LOG OF PAGES (CONT)

| Page No. | Rev No. |
|---|---|
| 121 – 124 | 13 |
| 125/126 | 13 |
| 127 – 128 | 13 |
| 129/130 | 13 |
| 131 – 132 | 28 |
| 133/134 | 20 |
| 135 | 22 |
| 136 – 138 | 13 |
| 138A – 138B | 28 |
| 139/140 | 13 |
| 141 – 142 | 13 |
| 143 | 18 |
| 144 | 28 |
| 145 – 146 | 18 |
| 147 | 13 |
| 148 – 149 | 18 |
| 150 | 16 |
| 151/152 | 13 |
| 153 – 154 | 13 |
| 155/156 | 13 |
| 157 | 18 |
| 158 | 13 |
| 159/160 | 18 |
| 161 | 13 |
| 162 | 18 |
| 163 | 13 |
| 164 | 18 |
| 165/166 | 13 |
| 167 | 13 |
| 168 | 18 |
| 169 – 172 | 13 |
| 173 | 18 |
| 174 | 13 |
| 175 – 180 | 18 |
| 181/182 | 13 |
| 183 – 184 | 25 |
| 185/186 | 25 |
| 187 – 188 | 25 |
| **VOLUME 2** | |
| Cover | 28 |
| Title | 28 |
| PN | 28 |
| Chapter 6 | |
| 1/2 | 0 |
| 3 – 6 | 0 |
| Chapter 7 | |
| 1/2 | 0 |
| 3 | 24 |
| 4 | 0 |
| 5/6 | 0 |
| Chapter 8 | |
| 1/2 | 26 |
| 3 – 5 | 0 |
| 6 | 24 |
| 7 – 13 | 0 |
| 14 – 16 | 24 |
| 17 | 25 |
| 18 – 21 | 24 |
| 22 – 23 | 26 |
| 24 | 24 |
| 25 – 26 | 26 |
| 27 – 28 | 24 |
| Chapter 9 | |
| 1/2 | 0 |
| 3 – 4 | 0 |
| Chapter 10 | |
| 1/2 | 0 |
| 3 – 5 | 0 |
| 6 | 20 |
| 7/8 | 0 |
| Chapter 11 | |
| 1/2 | 20 |
| 3 – 14 | 20 |
| 15/16 | 20 |
| Chapter 12 | |
| 1 | 18 |
| 2 | 14 |
| 3/4 | 5 |
| 5 | 18 |
| 6 | 5 |
| 7/8 | 5 |
| 9 – 14 | 5 |
| 15/16 | 20 |
| 17 – 24 | 5 |
| 25 | 24 |
| 26 | 5 |
| 27 – 28 | 24 |
| 29/30 | 5 |
| 31 – 32 | 14 |
| 32A/32B | 14 |
| 33 – 38 | 24 |
| 39 | 5 |
| 40 | 24 |
| 41 – 42 | 5 |
| 43 – 44 | 24 |
| Chapter 18 | |
| 1 – 2 | 20 |
| 3/4 | 20 |
| 5 – 10 | 20 |
| 11/12 | 20 |
| 13 – 16 | 20 |
| 17 – 24 | 24 |
| 25 | 20 |
| 26 | 24 |
| 27 – 32 | 20 |
| 33 | 24 |
| 34 – 36 | 20 |
| 37 | 24 |
| 38 | 20 |
| 39 | 24 |
| 40 – 42 | 20 |
| 43 | 24 |
| 44 – 48 | 20 |
| 49 | 24 |
| 50 – 52 | 28 |
| 53 – 56 | 20 |
| 57 – 60 | 24 |
| 61 – 62 | 20 |
| 63 – 64 | 24 |
| 65 – 66 | 20 |
| 67 | 24 |
| 68 – 71 | 20 |
| 72 | 24 |
| 73 – 77 | 20 |
| 78 | 24 |
| 79 – 83 | 20 |
| 84 – 85 | 24 |
| 86 | 20 |
| 87 | 24 |
| 88 | 20 |
| **VOLUME 3** | |
| Cover | 20 |
| Title | 20 |
| PN | 20 |

## LOG OF PAGES (CONT)

| Page No. | Rev No. |
|---|---|
| Chapter 21 | |
| 1/2 | 20 |
| 3 – 6 | 20 |
| 6A – 6B | 20 |
| 7 – 10 | 0 |
| Chapter 25 | |
| 1 – 42 | 0 |
| 43/44 | 0 |
| Chapter 26 | |
| 1/2 | 0 |
| 3 – 4 | 0 |
| **VOLUME 4** | |
| Cover | 25 |
| Title | 25 |
| PN | 25 |
| Chapter 28 | |
| 1 – 2 | 24 |
| 3/4 | 24 |
| 5 | 24 |
| 6 – 7 | 0 |
| 8 – 12 | 24 |
| 12A/12B | 24 |
| 13 | 0 |
| 14 | 11 |
| 15 – 18 | 24 |
| 18A – 18B | 24 |
| 19 | 0 |
| 20 | 25 |
| 21 – 26 | 0 |
| 27 | 11 |
| 28 – 30 | 0 |
| 31 | 11 |
| 32 – 33 | 0 |
| 34 | 20 |
| 34A/34B | 20 |
| 35 | 0 |
| 36 – 39 | 24 |
| 40 | 20 |
| 41 | 11 |
| 42 | 24 |
| Chapter 29 | |
| 1 – 10 | 22 |
| 11/12 | 22 |
| 13 – 34 | 22 |

| Page No. | Rev No. |
|---|---|
| **VOLUME 5** | |
| Cover | 25 |
| Title | 25 |
| PN | 25 |
| Chapter 30 | |
| 1/2 | 0 |
| 3/4 | 0 |
| Chapter 32 | |
| 1 – 4 | 0 |
| 5 – 8 | 11 |
| 9 | 12 |
| 10 – 12 | 0 |
| 13 | 11 |
| 14 | 0 |
| 14A/14B | 11 |
| 15 | 0 |
| 16 | 11 |
| 17 | 0 |
| 18 – 19 | 11 |
| 20 – 26 | 0 |
| 27 – 28 | 20 |
| 28A/28B | 20 |
| 29 – 42 | 0 |
| 43 – 47 | 11 |
| 48 – 50 | 0 |
| 51 | 11 |
| 52 – 63 | 0 |
| 64 | 11 |
| 65/66 | 0 |
| 67 – 70 | 0 |
| 71/72 | 0 |
| 73 – 74 | 0 |
| Chapter 52 | |
| 1 – 2 | 24 |
| 3/4 | 24 |
| 5 – 38 | 0 |
| 39/40 | 0 |
| 41 | 11 |
| 42 | 0 |
| 43 – 44 | 11 |
| 45 – 46 | 0 |
| 47 – 50 | 26 |
| 51 | 0 |
| 52 | 24 |
| 53 | 26 |
| 54 – 55 | 24 |

| Page No. | Rev No. |
|---|---|
| 56 | 26 |
| 57 – 58 | 24 |
| 59 | 26 |
| 60 | 24 |
| 61/62 | 24 |
| Chapter 53 | |
| 1 – 2 | 25 |
| 3 – 4 | 5 |
| 5/6 | 5 |
| 7 | 11 |
| 8 | 5 |
| 9 | 25 |
| 10 – 12 | 11 |
| 12A | 11 |
| 12B | 20 |
| 13 – 14 | 5 |
| 15/16 | 11 |
| 17 – 18 | 5 |
| 19 – 22 | 24 |
| 23 | 25 |
| 23A – 23J | 25 |
| 23K/23L | 25 |
| 24 | 25 |
| **VOLUME 6** | |
| Cover | 25 |
| Title | 28 |
| PN | 28 |
| Chapter 62 | |
| 1 | 20 |
| 2 | 24 |
| 3/4 | 20 |
| 5/6 | 20 |
| 7 – 12 | 20 |
| 13 – 14 | 24 |
| 14A – 14B | 24 |
| 15 – 18 | 20 |
| 19 – 22 | 24 |
| 22A/22B | 24 |
| 23 – 27 | 24 |
| 28 | 25 |
| 29 – 33 | 20 |
| 34 | 24 |
| 35 – 66 | 20 |
| Chapter 63 | |
| 1 – 4 | 13 |

# LOG OF PAGES (CONT)

| Page No. | Rev No. |
|---|---|
| 5/6 | 11 |
| 7 | 11 |
| 8 – 10 | 0 |
| 10A/10B | 11 |
| 11 – 14 | 0 |
| 15 | 11 |
| 16 | 24 |
| 17 | 11 |
| 18 | 20 |
| 19 – 20 | 11 |
| 20A/20B | 16 |
| 21 | 0 |
| 22 | 24 |
| 23 – 24 | 20 |
| 24A/24B | 28 |
| 25 | 28 |
| 26 | 0 |
| 27 – 28 | 28 |
| 29 – 30 | 13 |
| 30A – 30E | 13 |
| 30F | 24 |
| 30G/30H | 24 |
| 31 | 13 |
| 32 – 44 | 0 |
| 45 – 48 | 11 |
| 49 | 0 |
| 50 – 52 | 11 |
| 53 | 28 |
| 54 – 55 | 11 |
| 56 | 26 |
| 56A/56B | 26 |
| 57 – 60 | 11 |
| 60A – 60B | 11 |
| 61 – 63 | 0 |
| 64 – 65 | 11 |
| 66 | 0 |
| 67 – 70 | 11 |
| 70A/70B | 11 |
| 71 – 72 | 0 |
| 73/74 | 0 |

**VOLUME 7**

| Page No. | Rev No. |
|---|---|
| Cover | 25 |
| Title | 28 |
| PN | 28 |
| Chapter 64 | |
| 1 – 4 | 20 |
| 5 | 24 |
| 6 – 26 | 20 |
| Chapter 65 | |
| 1 | 11 |
| 2 | 22 |
| 3/4 | 11 |
| 5 | 0 |
| 6 | 25 |
| 7 – 10 | 0 |
| 11/12 | 0 |
| 13 – 15 | 0 |
| 16 | 11 |
| 17 – 18 | 24 |
| 19 | 11 |
| 20 | 28 |
| 20A/20B | 28 |
| 21 – 26 | 28 |
| 26A/26B | 28 |
| 27 | 28 |
| 28 | 11 |
| 29 | 22 |
| 30 | 28 |
| 31 – 32 | 22 |
| 33/34 | 22 |
| 35 | 11 |
| 36 | 28 |
| 36A/36B | 28 |
| 37 | 22 |
| 38 | 11 |
| 39 – 40 | 28 |
| 41 – 42 | 22 |
| 43 – 46 | 11 |
| 47 – 48 | 22 |
| 49/50 | 22 |

**VOLUME 8**

| Page No. | Rev No. |
|---|---|
| Cover | 25 |
| Title | 28 |
| PN | 28 |
| Chapter 67 | |
| 1 | 25 |
| 2 – 3 | 11 |
| 4 | 25 |
| 5/6 | 24 |
| 7 – 10 | 0 |
| 11/12 | 0 |
| 13 – 16 | 0 |
| 17 | 28 |
| 18 | 0 |
| 19/20 | 24 |
| 21 | 25 |
| 22 – 28 | 0 |
| 29 – 30 | 24 |
| 30A | 24 |
| 30B | 25 |
| 30C/D | deleted |
| 31 | 25 |
| 32 | 24 |
| 33 | 10 |
| 34 | 0 |
| 35 – 36 | 24 |
| 36A/36B | 24 |
| 37 – 39 | 0 |
| 40 | 24 |
| 41 – 43 | 11 |
| 44 | 24 |
| 45 | 11 |
| 46 | 0 |
| 47 – 48 | 11 |
| 49/50 | 11 |
| 51 | 25 |
| 52 – 55 | 0 |
| 56 | 11 |
| 57/58 | 25 |
| 59 – 60 | 11 |
| 61 – 62 | 24 |
| 62A/62B | 24 |
| 63 – 67 | 0 |
| 68 | 24 |
| 69 – 70 | 0 |
| 71 – 72 | 24 |
| 73/74 | 24 |
| 75 | 11 |
| 76 – 77 | 0 |
| 78 | 11 |
| 79 – 80 | 0 |
| 81/82 | 0 |
| 83 – 86 | 0 |
| 87/88 | 0 |
| 89 – 96 | 0 |
| 97/98 | 0 |
| 99 – 102 | 0 |

**VOLUME 9**

| Page No. | Rev No. |
|---|---|
| Cover | 24 |
| Title | 24 |
| PN | 24 |

## LOG OF PAGES (CONT)

| Page No. | Rev No. |
|---|---|
| Chapter 71 | |
| 1 – 2 | 24 |
| 3/4 | 24 |
| 5 – 6 | 11 |
| 7 – 9 | 0 |
| 10 | 11 |
| 11 – 12 | 0 |
| 13 | 11 |
| 14 – 16 | 24 |
| 16A – 16B | 24 |
| 16C/16D | 24 |
| 17 – 22 | 19 |
| 22A/22B | 19 |
| 22C – 22I | 19 |
| 22J – 22P | 20 |
| 22Q/22R | 20 |
| 23 – 24 | 24 |
| 25 – 26 | 0 |
| 27 – 28 | 13 |
| 29 – 32 | 0 |
| 33 – 34 | 11 |
| 35/36 | 11 |
| Chapter 75 | |
| 1/2 | 0 |
| 3 – 4 | 0 |
| Chapter 76 | |
| 1/2 | 19 |
| 3 – 4 | 19 |
| 5 | 24 |
| 6 – 14 | 19 |
| 15 | 24 |
| 16 – 22 | 19 |
| Chapter 79 | |
| 1/2 | 20 |
| 3 – 6 | 0 |
| 7/8 | 0 |
| 9 – 10 | 0 |
| 11/12 | 0 |
| 13 – 14 | 20 |
| 15/16 | 20 |
| **VOLUME 10** | |
| Cover | 24 |
| Title | 24 |
| PN | 24 |
| Chapter 95 | |
| 1 – 2 | 0 |
| 3/4 | 0 |
| 5 – 15 | 0 |
| 16 | 11 |
| 17/18 | 0 |
| 19 | 11 |
| 20 – 22 | 0 |
| 23/24 | 24 |
| 25 – 26 | 14 |
| 27 | 0 |
| 28 | 11 |
| 29/30 | 0 |
| 31/32 | 0 |
| Chapter 96 | |
| 1 – 4 | 24 |
| 5/6 | 24 |
| 7 – 10 | 0 |
| 11/12 | 0 |
| 13 – 16 | 24 |
| 16A – 16D | 24 |
| 16E/16F | 24 |
| 17 – 27 | 0 |
| 28 | 11 |
| 29/30 | 0 |
| 31 – 35 | 0 |
| 36 | 11 |
| 37 – 38 | 0 |
| 39/40 | 0 |
| 41 – 46 | 0 |
| 47/48 | 0 |
| 49/50 | 0 |
| 51 – 54 | 19 |
| 55/56 | 19 |
| **VOLUME 11** | |
| Cover | 11 |
| Title | 11 |
| PN | 11 |
| Chapter 97 | |
| 1 – 26 | 0 |
| 27/28 | 0 |
| **VOLUME 12** | |
| Cover | 24 |
| Title | 24 |
| PN | 24 |
| Chapter 98 | |
| 1 | 24 |
| 2 | 20 |
| 3/4 | 20 |
| 5 | 20 |
| 6 | 24 |
| 7 | 20 |
| 8 | 24 |
| 9 – 15 | 20 |
| 16 – 18 | 24 |
| 18A/18B | 24 |
| 19 – 58 | 20 |

# HELP

## EVALUATE

## LOGISTICS

## PUBLICATIONS

Have you found something wrong with this manual — an error, an inconsistency, unclear instructions, etc.? Although we strive for accuracy and clarity, we may make errors on occasion. If we do and you discover it, we would appreciate your telling us about it so that we can change whatever is incorrect or unclear. Please be as specific as possible.

Your complaint or suggestion will be acknowledged and we will tell you what we intend to do.

You may use the enclosed Customer Feedback form, as applicable, to inform us where we have erred.

Your assistance is sincerely appreciated.

# *CUSTOMER FEEDBACK*

**Return by fax to Product Support Engineering (450) 433-0272, e-mail to publications@bellflight.com, or mail to the address on the next page.**

Manual Title: _____

Manual Number (if assigned): _____

Date of Issue: _____

Date of Last Revision: _____

Section, Chapter, Paragraph Affected: _____

Your Feedback: _____

_____

_____

_____

Now Reads: _____

_____

_____

_____

Should Read: _____

_____

_____

_____

_____

Your Name: _____

Address: _____

_____

Position: _____ Telephone No.: _____

Company: _____ Fax No.: _____

Reference No. (your initials and date): _____

**(If you choose to mail this form, fold in thirds with address exposed, tape and mail.)**

**Export Classification C, ECCN EAR99**

TAPE HERE

From _____

_____

_____

POSTAGE
NECESSARY

**Product Support Engineering**
**12,800 rue de l'Avenir**
**Mirabel, Québec, Canada, J7J 1R4**

FOLD ON DOTTED LINES AND TAPE

**Export Classification C, ECCN EAR99**

TAPE HERE

# *IMPORTANT*

# *HELICOPTER SALES NOTICE*

Please complete this form and return by mail, e-mail (publications@bellflight.com), or fax (817-280-6466, Attention: CPDC). This will ensure that the new owners/operators receive updates to their ***Bell Textron Technical Manuals*** and ***Bulletins.***

Model of Helicopter Sold or Purchased _____

Serial and Registration Number _____

Name of ***New Owner*** (company or individual) _____

Name of ***New Operator*** _____

Future Publications to be mailed to this address:

Address _____

City _____

State/Province _____

Zip/Postal Code _____

Country _____

Fax No. _____ Telephone No. _____

E-mail Address _____

Register for access to electronic publications at www.bellflight.com

**Export Classification C, ECCN EAR99**

TAPE HERE

From _____

_____

_____

NO POSTAGE
NECESSARY
IF MAILED
IN THE
UNITED STATES

BUSINESS REPLY MAIL

FIRST CLASS PERMIT NO. 1744 FORT WORTH, TEXAS

BELL

**COMMERCIAL PUBLICATION DISTRIBUTION CENTER**
**P.O. BOX 482**
**FORT WORTH, TEXAS 76101-0482**

FOLD ON DOTTED LINES AND TAPE

TAPE HERE

**Export Classification C, ECCN EAR99**

# SPARE PARTS WARRANTY

**WARRANTY:** Seller warrants each new helicopter part or helicopter part reconditioned by Seller to be free from defect in material and workmanship under normal use and service and if installed on Bell model helicopters for up to 1000 hours of operation, one (1) year from date of installation, or two (2) years from date of shipment by Seller, whichever occurs first. Seller assigns each manufacturer's warranty to Buyer to the extent such manufacturer's warranty exists and is assignable.

Parts, components and assemblies of all helicopter parts may have been restored or reworked due to mars, blemishes, dents or other irregularities during the manufacturing process. Such restoration and/or rework are permitted under Seller's approved manufacturing and engineering processes and guidelines. The restoration and/or rework so completed do not render such items defective in material or workmanship.

Seller's sole obligation under this warranty is limited to the repair or replacement of parts which are determined to Seller's reasonable satisfaction to have been defective within the applicable warranty period as described above. Replacement of parts may be either new or reconditioned at Seller's election and at the lowest allowable maintenance level contained in Seller's manuals, service bulletins or applicable supplier manuals. Seller shall also reimburse reasonable freight charges, excluding insurance, customs fees, duties, handling fees, and taxes. Seller shall not reimburse Buyer for any parts repaired or replaced outside of the Seller's Warranty Claims Process unless express prior written authorization is granted by Seller's Warranty Department to Buyer for such repair or replacement.

**NO FAULT FOUND:** In the event Seller determines, after evaluation of a returned part, that a defect does not exist, then Buyer shall pay all expenses incurred by Seller related to the return including, but not limited to, costs incurred in shipping and evaluating the part and cost for any replacement part and restocking of the part. In addition, Seller shall not reimburse Buyer for any costs related to the removal or reinstallation of such a part.

**WARRANTY CLAIM PROCESS:** Defective parts must be reported in writing to the Seller's Warranty Administration within fourteen (14) days of being found defective. Parts may be repaired or replaced with new or reconditioned parts, at Seller's election. Warranty adjustment is contingent upon the Buyer complying with the Seller's Warranty Process as described in the Bell Helicopter VISTA Customer Portal and with the Seller's Warranty Administration disposition instructions for defective parts. Failure to properly comply with Seller's Warranty Process may, at Seller's sole option, void Seller's warranty as to the allegedly defective part.

**RETURN SHIPMENT:** Parts returned to Seller will be eligible for remedy under this warranty only if the part is carefully packed by the Buyer for the return shipment. Damage occurring to a part due to improper packaging may result in the denial of a warranty claim. In the event that Seller determines a returned part to be damaged or unsalvageable due to improper packaging, the Buyer will be billed repair or replacement cost incurred by Seller. The party initiating shipment bears the risk of loss or damage to parts in transit.

**CORE RETURNS:** Any core removed by Buyer for which Seller has furnished a replacement part through the Warranty Process shall be shipped by Buyer, with all historical service records, to a facility designated by Seller, within fourteen (14) days of receipt by Buyer of the replacement part. Buyer shall provide Seller with proof of shipment within fourteen (14) days following receipt of the replacement part. In the event that Buyer fails to provide Seller with such proof of shipment within the fourteen (14) days or fails to provide the applicable historical service records, Buyer shall be charged the invoiced value of the replacement part.

**WARRANTY AND LIABILITY DISCLAIMERS AND EXCLUSIONS:** THIS WARRANTY IS GIVEN AND ACCEPTED IN PLACE OF (i) ALL OTHER WARRANTIES OR CONDITIONS, EXPRESS OR IMPLIED, INCLUDING BUT NOT LIMITED TO THE IMPLIED WARRANTIES OR CONDITIONS OF MERCHANTABILITY OR FITNESS FOR A PARTICULAR PURPOSE AND (ii) ANY OBLIGATION, LIABILITY, RIGHT, CLAIM OR REMEDY IN CONTRACT OR IN TORT, INCLUDING PRODUCT LIABILITIES BASED UPON STRICT LIABILITY, NEGLIGENCE, OR IMPLIED WARRANTY IN LAW.

This warranty is the only warranty made by Seller. The Buyer's sole remedy for a breach of this warranty or any defect in a part is the repair or replacement of the helicopter part and reimbursement of reasonable freight charges. Seller excludes liability, whether as a result of a breach of contract or warranty, negligence or strict product liability, for incidental or consequential damages, including without limitation, damage to the helicopter or other property, costs and expenses resulting from required changes or modifications to helicopter components and assemblies, changes in retirement lives and overhaul periods, local customs fees and taxes, and costs or expenses for commercial losses or lost profits due to loss of use or grounding of helicopters or otherwise.

Seller makes no warranty and disclaims all liability in contract or in tort, including, without limitation, negligence and strict tort liability, with respect to work performed by third parties at Buyer's request and with respect to engines, engine accessories, batteries, radios, and avionics.

Seller makes no warranty and disclaims all liability with respect to components or parts damaged by, or worn due to, normal wear and tear, erosion or corrosion. Seller makes no warranty and disclaims all liability for consumables which are defined as items required for normal and routine maintenance or replaced at scheduled intervals shorter than the warranty period. "Consumables" include but are not limited to engine and hydraulic oil, oil filters, packings and o-rings, anti-corrosion and/or sealing compounds, brush plating material, nuts, bolts, washers, screws, fluids, compounds, and standard aircraft hardware that is readily available to aircraft operators from sources other than Seller.

This warranty shall not apply to any helicopter part which has been repaired or altered outside Seller's factory in any way so as, in Seller's sole judgment, to affect its stability, safety or reliability. This warranty shall not apply to any helicopter part which has been subject to misuse, negligence or accident, or which has been installed in any aircraft which has been destroyed. Repairs and alterations which use or incorporate parts and components other than genuine Bell parts or parts approved by Bell for direct acquisition from sources other than Bell itself are not warranted by Bell, and this warranty shall be void to the extent that such repairs and alterations,

in Seller's sole judgment, affect the stability, safety or reliability of the helicopter or any part thereof, or damage genuine Bell or Bell-approved parts. No person, corporation or organization, including Bell Authorized Customer Service Facilities, is authorized by Seller to assume for it any other liability in connection with the sale of its helicopters and parts.

NO STATEMENT, WHETHER WRITTEN OR ORAL, MADE BY ANY PERSON, CORPORATION OR ORGANIZATION, INCLUDING BELL AUTHORIZED CUSTOMER SERVICE FACILITIES, MAY BE TAKEN AS A WARRANTY NOR WILL IT BIND SELLER.

**CHOICE OF LAW AND JURISDICTION:** This warranty shall be interpreted under and governed by the laws of the State of Texas. All legal actions based upon claims or disputes pertaining to or involving this warranty including, but not limited to, Seller's denial of any claim or portion thereof under this warranty, must be filed in the courts of general jurisdiction of Tarrant County, Texas or in the United States District Court for the Northern District of Texas, Ft. Worth Division located in Ft. Worth, Tarrant County, Texas. In the event that Buyer files such an action in either of the court systems identified above, and a final judgment in Seller's favor is rendered by such court, then Buyer shall indemnify Seller for all costs, expenses and attorneys' fees incurred by Seller in defense of such claims. In the event Buyer files such a legal action in a court other than those specified, and Seller successfully obtains dismissal of that action or transfer thereof to the above described court systems, then Buyer shall indemnify Seller for all costs, expenses and attorneys' fees incurred by Seller in obtaining such dismissal or transfer.

# BULLETIN RECORD

Unless otherwise specified, all applicable Alert Service Bulletins and Technical Bulletins issued prior to and including the bulletins listed below have been incorporated in this manual. Subsequent applicable bulletins will be incorporated in future revisions/reissues.

## ALERT SERVICE BULLETINS

| ASB NUMBER | SUBJECT | DATE |
|---|---|---|
| 1 206L-21-186 | Main Rotor Pitch Link Assembly 206-010-360-005, Inspection and Application of Torque Seal Lacquer. | 11 February 2021 |

1 The following Alert Service Bulletins have not been incorporated: 206L-11-168.

## TECHNICAL BULLETINS

| TB NUMBER | SUBJECT | DATE |
|---|---|---|
| 1 206L-18-255 | Composite Inlet Cowling, Retrofit. | 28 June 2018 |

1 The following Technical Bulletins have not been incorporated: 206L-12-244, 206L-09-239, 206L-07-227, 206L-07-225, 206L-07-223, 206L-02-207, 206L-01-209, 206L-01-204, 206L-00-203, 206L-96-189, 206L-96-187, 206L-95-182, 206L-95-180, and 206L-95-178.

Technical Bulletins issued prior to 1990 are currently being reviewed for incorporation and the BR page will be updated to reflect this information at a future revision.

# TEMPORARY REVISION RECORD

This Temporary Revision Record provides a current listing of active Temporary Revisions against the manual. Temporary Revisions, which have been canceled/incorporated, will only be maintained on the record until the next revision is issued. If there are no Temporary Revisions shown on the record, this is confirmation that there are no Temporary Revisions issued against the manual.

| TEMP. REV. NO. | TITLE | DATE ISSUED | DATE CANCELED |
|---|---|---|---|

NOTE: For tracking purposes, Temporary Revisions are now being numbered (Example: TR-1).

# LIST OF CHAPTERS


| Title | Chapter |
|---|---|
| Introduction | 1 |
| Airworthiness Limitations Schedule | 4 |
| Inspections and Component Overhaul Schedule | 5 |
| Dimensions and Charts | 6 |
| Lifting and Jacking | 7 |
| Weight and Balance | 8 |
| Towing | 9 |
| Parking and Mooring | 10 |
| Placards and Markings | 11 |
| Servicing | 12 |
| Vibration Analysis | 18 |
| Air Distribution (Ventilation) | 21 |
| Equipment and Furnishings | 25 |
| Fire Protection | 26 |
| Fuel System | 28 |
| Hydraulic System | 29 |
| Ice and Rain Protection | 30 |
| Landing Gear | 32 |
| Doors and Windows | 52 |
| Fuselage | 53 |
| Main Rotor | 62 |
| Main Rotor Drive System | 63 |
| Tail Rotor | 64 |
| Tail Rotor Drive System | 65 |
| Flight Controls | 67 |
| Power Plant | 71 |
| Air System | 75 |
| Engine Controls | 76 |
| Engine Oil System | 79 |
| Instrument System | 95 |
| Electrical System | 96 |
| Avionics | 97 |
| Wiring Diagrams | 98 |

# CHAPTER 1 — INTRODUCTION

## CONTENTS — MAINTENANCE PROCEDURES


| Paragraph Number | Title | Chapter/Section Number | Page Number |
|---|---|---|---|
| 1-1 | Use of The Manual | 1-00-00 | 3 |
| 1-2 | Bulletins | 1-00-00 | 3 |
| 1-3 | Consumable materials | 1-00-00 | 3 |
| 1-4 | Special Tools | 1-00-00 | 3 |
| 1-5 | Torques | 1-00-00 | 3 |
| 1-6 | Terminology | 1-00-00 | 3 |
| 1-7 | Warnings, Cautions, and Notes | 1-00-00 | 3 |
| 1-8 | Use of Procedural Words | 1-00-00 | 4 |
| 1-9 | Wear Limits | 1-00-00 | 4 |
| 1-10 | Standard practices | 1-00-00 | 4 |
| 1-11 | Replacement Parts and Assemblies | 1-00-00 | 4 |
| 1-12 | Alphabetical Index (All Volumes) | 1-00-00 | 4 |
| 1-13 | Description of helicopter | 1-00-00 | 4 |


## FIGURES


| Figure Number | Title | Page Number |
|---|---|---|
| 1-1 | Major installations and assemblies | 6 |

# INTRODUCTION

## 1-1. USE OF THE MANUAL

This manual is divided into volumes, subdivided by chapters. To find a desired subject, refer to the Alphabetical Index located within this chapter to obtain the chapter containing the desired information. Refer to the desired volume and, using the tabbed pages provided that separate each chapter, refer to the Table of Contents at the beginning of the desired chapter to locate the specific subject. This manual should be used in conjunction with the BHT-206L-CR&O and BHT-206A/B/L-Series-CR&O.

## 1-2. BULLETINS

As necessary, Technical Bulletins (TB) and Alert Service Bulletins (ASB) will be issued. These documents provide information to modify components or systems on the helicopter. Refer to the Bulletin Record, page BR- 1/2 preceding this chapter for bulletins that have been incorporated in this manual. Additional space is provided for listing TBs and ASBs that are incorporated by the owner/operator.

**COMPLIANCE WITH ALL ALERT SERVICE BULLETINS IS MANDATORY.**

## 1-3. CONSUMABLE MATERIALS

**WARNING**

HANDLING AND STORAGE OF CONSUMABLE MATERIALS SHALL BE IN ACCORDANCE WITH MANUFACTURER INSTRUCTIONS UNLESS OTHERWISE NOTED IN APPLICABLE MAINTENANCE TASKS.

Consumable materials required while performing maintenance are listed in the text by name and item number such as solvent (C-304). The number refers to item 304 in Chapter 13 of the BHT-ALL-SPM, Standard Practices Manual. In addition, a list of all consumable materials (by item number and full nomenclature) required for each individual chapter is provided following the Table of Contents for that chapter.

Occasionally, materials used in maintenance change properties, suppliers, or are discontinued. Also, new and more advanced materials become available. In the event conflict between this manual and the Standard Practices manual, the manual with the latest date of issue lists the preferred material. However, either material may be used for the accomplishment of the prescribed task unless specifically stated otherwise.

## 1-4. SPECIAL TOOLS

Certain maintenance procedures require the use of special tools. Special tools required are listed at the beginning of the applicable maintenance paragraph. A complete description and illustration of these tools is provided in BHT-SPECTOOL-IPC.

## 1-5. TORQUES

Torques are specified as either standard or special within this manual. Standard torque values for various type fasteners will be found in the BHT-ALL-SPM. Where applicable, special torques are specified within the text (or on illustrations) within this manual.

## 1-6. TERMINOLOGY

### 1-7. WARNINGS, CAUTIONS, AND NOTES

Warnings, cautions, and notes are used throughout this manual to emphasize important and critical instructions as follows:

**WARNING**

AN OPERATING PROCEDURE, PRACTICE, ETC., WHICH, IF NOT CORRECTLY FOLLOWED, COULD

RESULT IN PERSONAL INJURY OR LOSS OF LIFE.

**CAUTION**

AN OPERATING PROCEDURE, PRACTICE, ETC., WHICH, IF NOT STRICTLY OBSERVED, COULD RESULT IN DAMAGE TO, OR DESTRUCTION OF, EQUIPMENT.

**NOTE**

An operating procedure, condition etc., which is essential to highlight.

## 1-8. USE OF PROCEDURAL WORDS.

The concept of procedural word usage and intended meaning which is used throughout this manual is as follows:

"Shall" is used only when application of a procedure is mandatory.

"Should" is used only when application of a procedure is recommended.

"May" and "need not" is used only when application of a procedure is optional.

"Will" is used only to indicate futurity, never to indicate a mandatory procedure.

## 1-9. WEAR LIMITS.

**CAUTION**

METRIC EQUIVALENTS TO U.S. STANDARD WEIGHTS AND MEASURES ARE PROVIDED THROUGHOUT THIS MANUAL. WHILE PERFORMING MEASUREMENTS TO DETERMINE THE SERVICABILITY OF A COMPONENT OR TO ESTABLISH A SPECIFIED DIMENSION, ONLY THE U.S. STANDARD VALUES SHALL BE USED.

Throughout this manual, wear limits are provided to show the required fit between mating parts. It is not intended that all dimensions be checked as a prescribed maintenance procedure; however, parts that show evidence of wear or physical damage must be checked dimensionally.

Wear limits, fit, and tolerances are integrated into the inspection, repair, and assembly procedures. Unless otherwise specified, dimensions shall carry the following tolerances on decimals.

| DECIMAL | TOLERANCE |
|---|---|
| .XXX | ±0.010 inch |
| .XX | ±0.03 inch |
| .X | ±0.1 inch |

## 1-10. STANDARD PRACTICES.

Standard maintenance practices and procedures not specifically described within this manual are contained BHT-ALL-SPM.

## 1-11. REPLACEMENT PARTS AND ASSEMBLIES.

Replacement Parts and Assemblies required for proper maintenance are listed in a companion Illustrated Parts Catalog. This catalog provides complete nomenclatures, part numbers, and ordering information.

## 1-12. ALPHABETICAL INDEX (ALL VOLUMES).

The alphabetical index, following Chapter 5, lists all primary headings with cross-indexing.

## 1-13. DESCRIPTION OF HELICOPTER.

Major installations and assemblies are shown in figure 1-1.

The fuselage assembly consists of the forward fuselage and tailboom. The forward fuselage provides the cabin and fuel cell enclosure as well as pylon and engine supports.

The basic structure of the forward fuselage consists of a lower-curved honeycombed sandwich panel and an upper longitudinal aluminum beam. The core of the sandwich structure is aluminum alloy throughout, and is faced with aluminum alloy except in the fuel cell region, where fiberglass is used. The rotor, transmission and engine are supported by the upper longitudinal beam, which is connected to the lower structure by three fuselage bulkheads and a centerpost to form an integrated structure. The most forward and aft bulkheads act as carry-through structures for the landing gear crosstubes. The tailboom is a full monocoque structure with aluminum skin and aluminum substructure.

The helicopter is powered by an Allison model 250-C30P turboshaft engine. It is an internal combustion gas turbine engine consisting of a single stage centrifugal-flow compressor, a single combustion chamber, a two-stage gas producer turbine and a two-stage power turbine. (Refer to Allison 250-C30P Series Operation and Maintenance Manual, 14W2PM.)

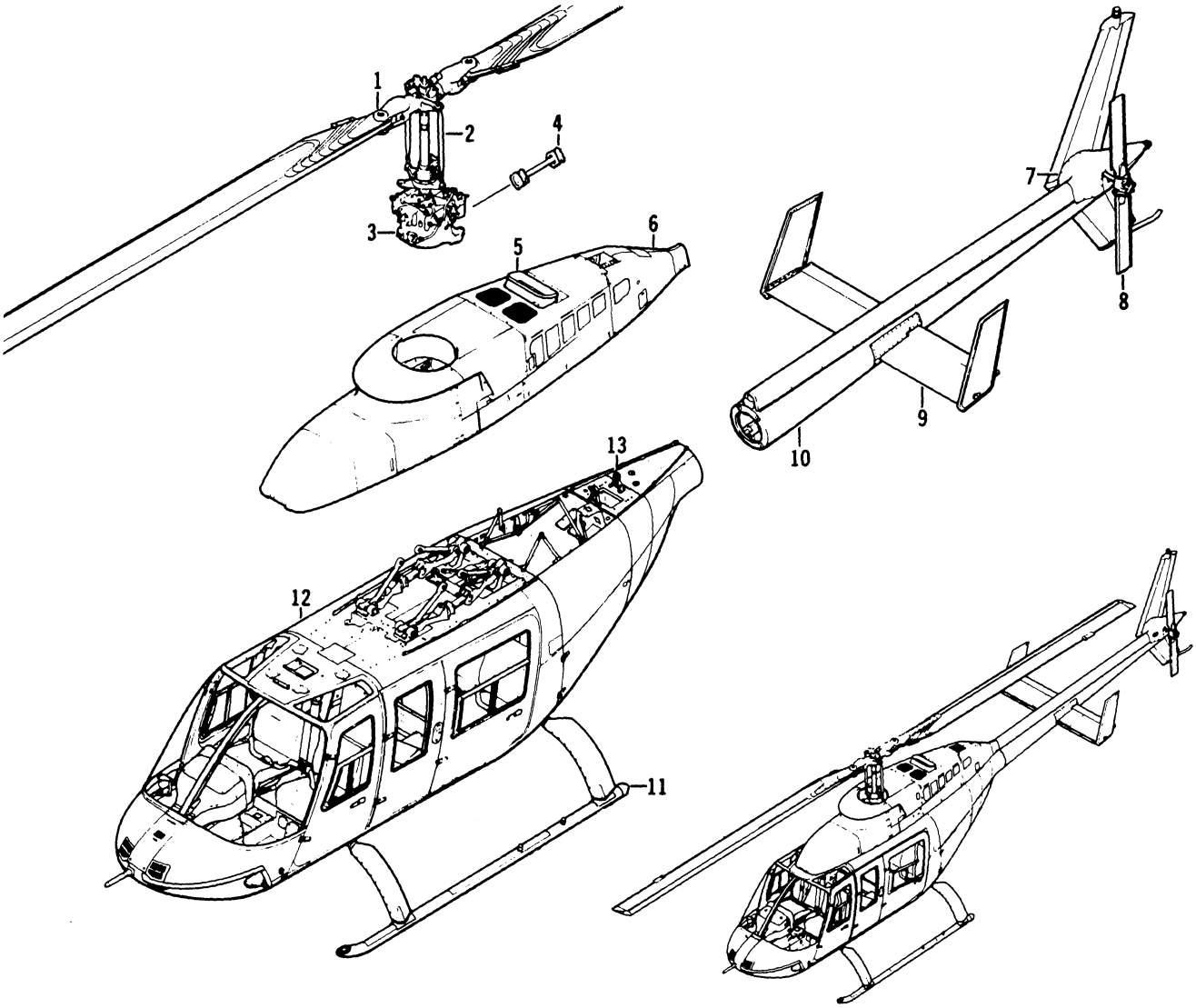


| INDEX NUMBER | TITLE | VOLUME | CHAPTER |
|---|---|---|---|
| 1 | Main Rotor Hub and Blade Installation | 6 | 62 |
| 2 | Pylon Installation | 8 | 67 |
| 3 | Transmission Assembly | 7 | 63 |
| 4 | Main Driveshaft Installation | 7 | 63 |
| 5 | Engine Assembly | 9 | 71 |
| 6 | Cowling Installation | 9 | 71 |
| 7 | Fairing Installation, Tail Rotor | 5 | 53 |
| 8 | Tail Rotor Assembly | 6 | 62 |
| 9 | Stabilizer Installation, Horizontal | 5 | 53 |
| 10 | Tailboom Assembly | 5 | 53 |
| 11 | Landing Gear Assembly | 5 | 32 |
| 12 | Fuselage Structure Assembly | 5 | 53 |
| 13 | Tail Rotor Driveshaft Installation | 7 | 63 |

206L4-M-1-1

Figure 1-1. Major installations and assemblies

# CHAPTER 4 — AIRWORTHINESS LIMITATIONS SCHEDULE

## TABLE OF CONTENTS


| Paragraph Number | Title | Chapter/Section Number | Page Number |
|---|---|---|---|
| | **AIRWORTHINESS LIMITATIONS SCHEDULE** | | |
| 4-1 | Airworthiness Limitations Schedule ..... | 4-00-00 | 5 |


## FIGURES


| Figure Number | Title | Page Number |
|---|---|---|
| 4-1 | Tailboom Upper Left Attachment Fitting (206-032-409-001) — Recurring 110-Hour Inspection ..... | 12 |


## TABLES


| Table Number | Title | Page Number |
|---|---|---|
| 4-1 | Airworthiness Limitations Schedule ..... | 6 |
| 4-2 | Inspection Limitations Schedule ..... | 11 |


The Airworthiness Limitations Schedule is approved by the Minister and specifies the maintenance required by any applicable airworthiness or operational rules unless an alternative program has been approved by the Minister.

Chief Engineering
Aircraft Certification
Transport Canada

| REVISION NO. | DATE OF SIGNATURE | APPROVAL SIGNATURE |
|---|---|---|
| Original | 2 October 1992 | |
| Reissue | 2 December 1994 | |
| 1 | 21 April 1998 | |
| 2 | N/A | N/A |
| 3 | 9 December 2002 | |
| 4 | 22 December 2003 | |
| 5 | N/A | N/A |
| 6 | 30 October 2007 | |
| 7 | 26 May 2009 | 26-05-2009 |

| REVISION NO. | DATE OF SIGNATURE | APPROVAL SIGNATURE |
|---|---|---|
| 8 | 25 September 2009 | 25 - SEP. 2009 |
| 9 | N/A | N/A |
| 10 | N/A | N/A |
| 11 | N/A | N/A |
| 12 | N/A | N/A |
| 13 | N/A | N/A |
| 14 | 8 April 2011 | 8/APR./2011 |
| 15 | 29 February 2012 | 29 FEB. 2012 |
| 16 | 1 June 2012 | 1 JUNE 2012 |
| 17 | 7 November 2012 | 7 NOV. 2012 |
| 18 | N/A | N/A |
| 19 | N/A | N/A |
| 20 | N/A | N/A |

| REVISION NO. | DATE OF SIGNATURE | APPROVAL SIGNATURE |
|---|---|---|
| 21 | N/A | N/A |
| 22 | N/A | N/A |
| 23 | 25 June 2019 | Acting DARDD 25 June 2019 |
| 24 | N/A | N/A |
| 25 | N/A | N/A |
| 26 | N/A | N/A |
| 27 | 20 MARCH 2024 | DocuSigned by: C5962CA6FFA74B6... |
| 28 | N/A | N/A |
| 29 | 10 JULY 2026 | Electronically Signed 2026-07-10 20:20:35 UTC - 198.103.96.11 Z. Teclemariam Nintex AssureSign® 6fda0597-07bc-4da9-baa2-b483014f2b33 |

# AIRWORTHINESS LIMITATIONS SCHEDULE

## 4-1. AIRWORTHINESS LIMITATIONS SCHEDULE

**WARNING**

ALL REPAIR AND OVERHAUL PROCEDURE LIVES PUBLISHED BY BELL HELICOPTER TEXTRON, INCLUDING COMPONENT RETIREMENT LIFE, ARE BASED SOLELY ON THE USE OF BELL APPROVED PARTS AND PROCESSES. IF PARTS OR PROCESSES DEVELOPED OR APPROVED BY PARTIES OTHER THAN BELL HELICOPTER ARE USED, THEN THE DATA PUBLISHED OR OTHERWISE SUPPLIED BY BELL HELICOPTER ARE NOT APPLICABLE. THE USER IS WARNED TO NOT RELY ON BELL HELICOPTER DATA FOR PARTS AND PROCESSES NOT APPROVED BY BELL HELICOPTER. ALL APPLICABLE INSPECTIONS AND REPAIR METHODS MUST BE OBTAINED FROM THE SUPPLIER OF THE PARTS OR PROCESSES NOT APPROVED BY BELL HELICOPTER. BELL HELICOPTER IS NOT RESPONSIBLE FOR PARTS OR PROCESSES OTHER THAN THOSE WHICH IT HAS ITSELF DEVELOPED OR APPROVED.

**WARNING**

CONTINUED USE OF ANY TIME/CALENDAR/RIN LIFE LIMITED COMPONENT PAST ITS STATED LIMITS IS NOT PERMITTED AS IT COULD SERIOUSLY AFFECT THE AIRWORTHINESS OF THE HELICOPTER. THE COMPONENT MUST BE REMOVED FROM THE HELICOPTER NOT LATER THAN THE END OF THE LIFE LIMIT. IT MUST EITHER BE MADE UNSERVICEABLE OR MARKED IN A CONSPICUOUS MANNER TO PREVENT CONTINUED USE, EVEN INADVERTENT USE.

WHEN A REPLACEMENT PART IS INSTALLED, THE PART NAME, PART NUMBER, SERIAL NUMBER, AND CURRENT OPERATING HOURS, IF APPLICABLE, MUST BE RECORDED IN THE HISTORICAL SERVICE RECORD FOR THE ASSEMBLY OR HELICOPTER.

**NOTE**

The requirements stated in Chapter 5 are to be complied with and the appropriate maintenance actions are to be performed.

**NOTE**

The airworthiness life or inspection interval for any part number contained in this schedule applies to all the successive dash numbers for that component unless it is otherwise specified.

The mandatory Airworthiness Limitation Schedule (Table 4-1) summarizes the mandatory maximum life, in hours, years or by Retirement Index Number (RIN) of components with a limited airworthiness life. Parts that are not on the schedule have an unlimited airworthiness life. The Inspection Limitations Schedule (Table 4-2) summarizes the mandatory inspection interval in hours.

Refer to the engine manufacturer's publications for the airworthiness limitations of the power plant components.

**WARNING**

SOME PARTS ARE INSTALLED AS ORIGINAL EQUIPMENT ON BOTH MILITARY AND COMMERCIAL HELICOPTERS AND MAY HAVE A LOWER AIRWORTHINESS LIFE AND/OR OVERHAUL SCHEDULE WHEN USED ON A MILITARY HELICOPTER. IN ADDITION, CIRCUMSTANCES SURROUNDING THEIR USE MAY CALL FOR OPERATION OF THE MILITARY HELICOPTER OUTSIDE OF THE APPROVED COMMERCIAL FLIGHT ENVELOPE. CONSEQUENTLY, PARTS THAT HAVE BEEN USED ON MILITARY HELICOPTERS SHOULD NOT BE USED ON COMMERCIAL HELICOPTERS.

**CAUTION**

AIRWORTHINESS LIFE OF SOME KIT COMPONENTS IS NOT COVERED IN THIS SCHEDULE. REFER TO APPLICABLE SERVICE INSTRUCTION (SI) OR MAINTENANCE MANUAL SUPPLEMENT (MMS) FOR KIT COMPONENT SCHEDULES.

**NOTE**

The retirement life given, or the failure to give a retirement life to a component, does not constitute a warranty of any kind. The only warranty applicable to the helicopter or any component is the warranty included in the Purchase Agreement for the helicopter or the component.

The airworthiness lives given to the components and assemblies are determined by experience, tests, and the judgment of Bell Helicopter engineers. The lives cannot be changed without the approval of the Minister of Transport Canada.

Prior to disposing of unsalvageable helicopter parts and materials, caution should be exercised to ensure that the parts and material are disposed of in a manner that does not allow them to be returned for service. Refer to FAA Advisory Circular 21-38 for guidance on the disposal of unsalvageable aircraft parts and materials.

**Table 4-1. Airworthiness Limitations Schedule**

| COMPONENT | PART NUMBER 1 | AIRWORTHINESS LIFE |
|---|---|---|
| **MAIN ROTOR HUB AND BLADES** | | |
| Main Rotor Trunnion | 206-011-120-103/-105 | 21 22 24,000 RIN |
| Strap Retention Pin | 206-011-125-001 | 1200 hours |
| Main Rotor Grip | 206-011-132-113 | 4800 hours |
| Tension Torsion Strap | 206-011-147-007 | 11 1200 hours/24 months |
| Strap Retention Fitting | 206-011-150-105 | 2400 hours |
| Tension Torsion Strap | 206-011-154-103/-107 | 11 1200 hours/24 months |
| Latch Bolt | 206-011-260-101 | 17 1200 hours |
| Main Rotor Blade | 206-015-001-001/-103/-105/ -107/-109/-111/-113/115/-117/ -119/-121 | 31 36 4000 hours |

Table 4-1. Airworthiness Limitations Schedule (Cont)

| COMPONENT | PART NUMBER 1 | AIRWORTHINESS LIFE |
|---|---|---|
| **MAIN ROTOR HUB AND BLADES (CONT)** | | |
| Main Rotor Blade | 206-015-001-125/-127/-129/-131 | 31 2300 hours |
| Tension Torsion Strap | 206-310-004-103 | 37 1200 hours/48 months |
| **SWASHPLATE AND SUPPORT** | | |
| Lower Cyclic Tube | 206-001-193-001 | 4800 hours |
| Swashplate Support Assembly | 206-010-445-113 | 14,400 hours |
| Collective Idler Link | 206-010-446-105 | 24 1200 hours |
| Collective Idler Link | 206-010-446-107 | 14,400 hours |
| Collective Lever | 206-010-447-105 | 25 1200 hours |
| Collective Lever | 206-010-447-109 | 14,400 hours |
| Collective Sleeve Assembly | 206-010-454-107/-109/-113 | 14,400 hours |
| **POWER TRAIN** | | |
| Tail Rotor Gearbox Duplex Bearing | 206-040-410-003/-005/-101 | 3000 hours |
| Main Rotor Mast | 206-040-535-101/-105 | 9 21 23 5500 hours/44,000 RIN |
| Main Rotor Mast | 206-040-535-109 | 21 23 5500 hours/44,000 RIN |
| Sun Gear | 206-040-662-101 | 14 |
| **TAIL ROTOR HUB AND BLADES** | | |
| Tail Rotor Yoke | 206-011-819-105/-109 | 5000 hours |
| Tail Rotor Blade | 206-016-201-001/-107/-113 | 15 32 2400 hours |
| Tail Rotor Blade | 206-016-201-127/-131/-135 | 15 16 30 32 2500 hours |
| Tail Rotor Yoke | 406-012-102-107/-113 | 5000 hours |
| **AIRFRAME** | | |
| Horizontal Stabilizer | 206-023-119-167 | 29 |
| **MISCELLANEOUS KITS** | | |
| High Landing Gear Crosstube | 206-053-109-ALL | 18 |
| Standard Landing Gear Crosstube | 206-053-119-ALL | 18 |
| Fixed Floats Landing Gear Aft Crosstube | 206-053-211-103 | 27 |

**Table 4-1. Airworthiness Limitations Schedule (Cont)**

| COMPONENT | PART NUMBER 1 | AIRWORTHINESS LIFE |
|---|---|---|
| | **MISCELLANEOUS KITS (CONT)** | |
| Emergency Floats Reservoir | 1271226 | 28 15 years |
| Emergency Floats Squib | 94455 | 33 |
| Emergency Floats Squib | 29022968 | 34 |
| Hoist Cable Cutter Assembly | Y-1265-11-1 | 35 |
| | **POWER PLANT** | |
| Turboshaft Engine | 250-C30P | Refer to Rolls Royce 250-C30P Operation and Maintenance Manual, 14W2 |

**NOTES:**

1 Airworthiness limitation for part number listed applies to all successive dash numbers for that component unless otherwise specified.

2 Reserved.

3 Reserved.

4 Reserved.

5 Reserved.

6 Reserved.

7 Reserved.

8 Reserved.

9 Selected serial numbers of main rotor mast 206-040-535-105 will have been returned to Bell Helicopter Textron (BHT) for metallurgical evaluation no later than 31 May 1987. Affected masts inspected at BHT and found to be acceptable have the suffix “U” added to the serial number. Refer to ASB 206L-87-44, dated 23 April 1987 for list of serial numbers affected.

10 Reserved.

11 Main rotor hub tension torsion straps 206-011-147 and 206-011-154 have airworthiness lives of 1200 hours or 24 months, whichever occurs first. The calendar life of 24 months starts when new straps are installed in a main rotor hub and blade assembly, and are subjected to rotation on the helicopter. Refer to ASB 206L-80-12, dated 2 June 1980.

12 Reserved.

13 Reserved.

14 Selected serial numbers of sun gear 206-040-662-101 must be removed from service. Refer to ASB 206L-90-69 Rev. A, dated 15 January 1991 for list of serial numbers affected.

15 Selected serial numbers of tail rotor blades 206-016-201-113/-127 must be removed from service. Refer to ASB 206L-90-70, dated 27 June 1990 for list of serial numbers affected.

**Table 4-1. Airworthiness Limitations Schedule (Cont)**

**NOTES (CONT):**

16 Selected serial numbers of tail rotor blade 206-016-201-127 will have been returned to Bell Helicopter Textron (BHT) for evaluation no later than 30 September 1990. Affected blades inspected at BHT and found to be acceptable have the suffix “M” added to the serial number. Refer to ASB 206L-90-71 Rev. A, dated 31October 1990 for list of serial numbers affected.

17 Selected serial numbers of main rotor latch bolt 206-011-260-101 must be removed from service. Refer to ASB 206L-92-86, dated 3 December 1992 for list of serial numbers affected

18 Landing gear crosstubes 206-053-109-ALL and 206-053-119-ALL (all dash numbers) will have been removed from service no later than 30 September 1994. Refer to ASB 206L-94-93, dated 11 April 1994.

19 Reserved.

20 Reserved.

21 Each component with a retirement life sensitive to torque events will be assigned a maximum Retirement Index Number (RIN). This RIN corresponds to maximum allowed fatigue damage resulting from lifts and takeoffs. A torque event is defined as a takeoff (one takeoff plus subsequent landing = one RIN) or a lift (internal or external). For example, if an operator performs six takeoffs and 10 slingloads, this would total 16 torque events;
(6 takeoffs = 6 events, 10 slingloads = 10 events, 6 + 10 = 16 torque events total).
Pilots are to record total number of torque events for each flight. This allows maintenance personnel to convert torque events to RIN by applying the appropriate RIN adjustment factor. Refer to ASB 206L-94-99 Rev. B, dated 10 August 2001. A new component will begin with an accumulated RIN of zero, that will be increased as lifts and takeoffs are performed. Operator will record number of lifts and takeoffs (torque events), and increase accumulated RIN accordingly. When maximum RIN is reached or retirement flight hours, whichever occurs first, component will be removed from service.

22 The retirement life of trunnion 206-011-120-103/-105 is based solely on RIN. Retire trunnion when RIN = 24,000. For each takeoff/lift, add one RIN if the trunnion is installed on 206L, 206L1, or 206L3 (includes 206L3 with Increase Power Operation kit installed per BHT-206-SI-2039) and two RIN if the trunnion is installed on a 206L4. Refer to ASB 206L-94-99 Rev. B, dated 10 August 2001.

23 Retire main rotor masts 206-040-535-001/-005/-101/-105/-109 when RIN = 44,000. For each takeoff/lift, add one RIN if the mast is installed on 206L, 206L1, or 206L3 (includes 206L3 with Increase Power Operation kit installed per BHT-206-SI-2039) and two RIN if the mast is installed on a 206L4. Refer to ASB 206L-94-99 Rev. B, dated 10 August 2001.

24 Collective idler link 206-010-446-105, serial numbers A-1 through A-27, inclusively, and serial numbers RE-238 through and including RE-270 will be retired from service at 1200 hours service time. Refer to ASB 206L-98-110, dated 6 May 1998.

25 Collective lever 206-010-447-105, serial numbers A-1 through A-22, inclusively, will be retired from service at 1200 hours service time. Refer to ASB 206L-98-110, dated 6 May 1998.

26 Reserved.

**Table 4-1. Airworthiness Limitations Schedule (Cont)**

**NOTES (CONT):**

27 Landing gear aft crosstube 206-053-211-103 has an airworthiness life of 33,000 landings. Refer to ASB 206L-94-97, dated 17 August 1994.

28 Reservoir per DOT-3HT specification and Exemption Letter DOT-E-7218. Life starts from date of manufacture.

29 Affected horizontal stabilizer 206-023-119-167 must be removed from service no later than 30 September 2008. Refer to ASB 206L-06-141 for list of horizontal stabilizer serial numbers affected. Applicable horizontal stabilizers must be inspected every 600 hours or annually until replaced. Refer to ASB 206L-06-141 for inspection details.

30 Tail rotor blades 206-016-201-127 and subsequent, retirement life increased to 2500 hours. Refer to TB 206L-89-147, dated 2 June 1989.

31 Main rotor blades 206-015-001-ALL (all dash numbers). It is permissible to use any main rotor blade (mix and match) on 206L, 206L1, 206L3, 206L4, provided that all conditions are met. Refer to TB 206L-87-142, dated 1 October 1987, and IL 206L-00-68 Rev. A or subsequent.

32 Tail rotor blades 206-016-201-ALL (all dash numbers). It is permissible to use any tail rotor blade on 206L, 206L1, 206L3, 206L4 provided that all conditions are met. Refer to TB 206L-94-172, dated 19 December 1994.

33 Part of squib assembly 30908. Retire squib no later than 15 years after date of manufacturing. Dispose of time expired squib in accordance with local regulations.

34 Part of squib assembly 29022971 and approved alternate for squib 30908. Retire squib no later than 15 years after date of manufacturing. Dispose of time expired squib in accordance with local regulations.

35 Storage life of cutter assembly Y-1265-11-1, in original sealed container, is set at 60 months. Service life is 36 months from the time the cutter assembly is removed from the original sealed container. The 36-month service life must be contained within the 60-month storage life. Dispose of time expired squib in accordance with local regulations.

Example 1 – Cutter assembly stored for 24 months: 60 - 24 = 36-month service life.
Example 2 – Cutter assembly stored for 48 months: 60 - 48 = 12-month service life.
Example 3 – Cutter assembly stored for 1 month: 60 - 1 = 59 months, reduced to 36 months maximum service life.

36 The airworthiness life of 4000 hours is only applicable to main rotor blades not affected by ASB 206L-09-159 Rev. A, dated 13 November 2009, or subsequent. Refer to TCCA AD CF-2011-44 R1, dated 1 February 2012, or subsequent for life applicable to blades affected by ASB 206L-09-159.

37 Main rotor hub tension torsion straps 206-310-004 have an airworthiness life of 1200 hours or 48 months, whichever occurs first. The calendar life of 48 months starts when new straps are installed in a main rotor hub and blade assembly, and are subjected to rotation on the helicopter.

**Table 4-2. Inspection Limitations Schedule**

| COMPONENT | PART NUMBER (1) | INSPECTION INTERVAL (HOURS OPERATING TIME) |
|---|---|---|
| Tailboom Upper Left Attachment Fitting | 206-032-409-001 | (2) 110 hours |

**NOTES:**

(1) Inspection limitation for the part number listed applies to all successive dash numbers for that component unless otherwise specified.

(2) You must do an inspection of the tailboom upper left attachment fitting 206-032-409-001 every 110 flight hours. Refer to ASB 206L-09-158 for a listing of affected tailbooms. Refer to Figure 4-1 for inspection details.

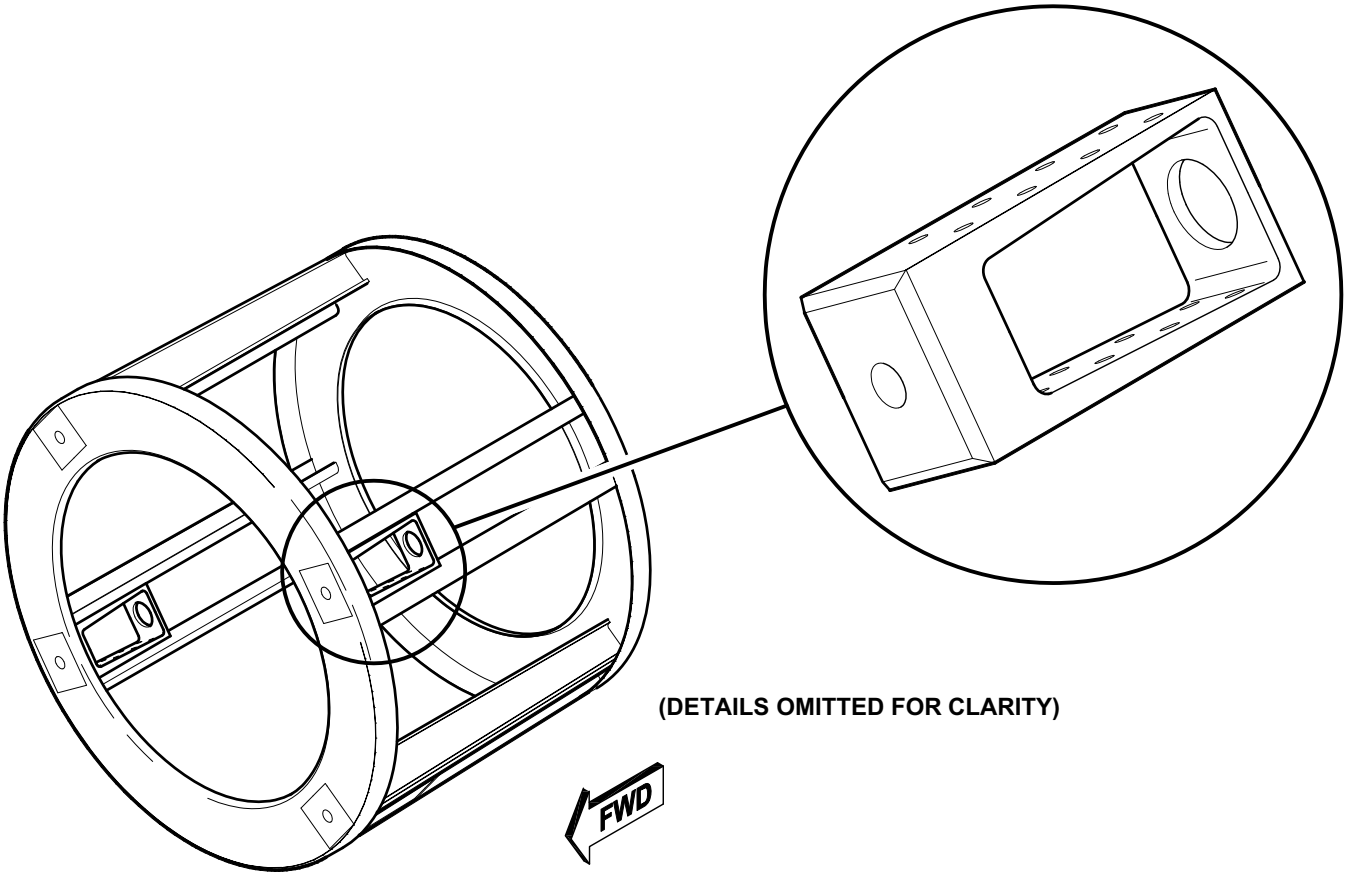


**INSPECTION PROCEDURE:**

1. Inspect upper left attachment fitting for cracks, mechanical damage, corrosion damage, loose rivets, and general condition.
2. Refer to ASB 206L-09-158 for wear, damage, and repair limits.
3. Repair fitting in accordance with ASB 206L-09-158.
4. Replace cracked or damaged fitting or loose rivets in accordance with ASB 206L-09-158.
5. If a crack is found, contact Product Support Engineering .

206LS_MM_04_0001+_c01

**Figure 4-1. Tailboom Upper Left Attachment Fitting (206-032-409-001) — Recurring 110-Hour Inspection**

# CHAPTER 5 — INSPECTIONS AND COMPONENT OVERHAUL SCHEDULE

## TABLE OF CONTENTS


| Paragraph Number | Title | Chapter/Section Number | Page Number |
|---|---|---|---|
| | **INSPECTIONS AND COMPONENT OVERHAUL SCHEDULE** | | |
| 5-1 | General | 5-00-00 | 3 |
| 5-2 | Items Not Covered and Inspection Responsibility | 5-00-00 | 3 |
| 5-3 | Crash Damage | 5-00-00 | 4 |
| 5-4 | Types of Inspections | 5-00-00 | 4 |
| 5-5 | Definitions | 5-00-00 | 5 |
| 5-6 | Inspection and Overhaul Tolerance | 5-00-00 | 6 |
| | **SCHEDULED INSPECTIONS** | | |
| 5-7 | Scheduled Inspections | 5-00-00 | 7 |
| 5-8 | Airframe Inspection Program | 5-00-00 | 7 |
| 5-9 | Airframe Progressive Inspection Programs | 5-00-00 | 7 |
| 5-10 | 100-Hour Airframe Progressive Inspection Program | 5-00-00 | 7 |
| 5-11 | 300-Hour Airframe Progressive Inspection Program | 5-00-00 | 8 |
| 5-12 | Airframe Periodic Inspection Program | 5-00-00 | 8 |
| 5-13 | 100-Hour Airframe Periodic Inspection Program | 5-00-00 | 9 |
| 5-14 | 300-Hour Airframe Periodic Inspection Program | 5-00-00 | 9 |
| 5-15 | Changing Inspection Program | 5-00-00 | 10 |
| 5-16 | 100-Hour Airframe Progressive Inspection — Event No. 1 | 5-00-00 | 17 |
| 5-17 | 100-Hour Airframe Progressive Inspection — Event No. 2 | 5-00-00 | 27 |
| 5-18 | 100-Hour Airframe Progressive Inspection — Event No. 3 | 5-00-00 | 33 |
| 5-19 | 100-Hour Airframe Progressive Inspection — Event No. 4 | 5-00-00 | 37 |
| 5-20 | 100-Hour Airframe Periodic Inspection | 5-00-00 | 45 |
| 5-21 | 300-Hour Airframe Progressive Inspection — Event No. 1 | 5-00-00 | 47 |
| 5-22 | 300-Hour Airframe Progressive Inspection — Event No. 2 | 5-00-00 | 51 |
| 5-23 | 300-Hour Airframe Progressive Inspection — Event No. 3 | 5-00-00 | 57 |
| 5-24 | 300-Hour Airframe Progressive Inspection — Event No. 4 | 5-00-00 | 63 |
| 5-25 | 300-Hour Airframe Progressive Inspection — Event No. 5 | 5-00-00 | 69 |
| 5-26 | 300-Hour Airframe Progressive Inspection — Event No. 6 | 5-00-00 | 77 |
| 5-27 | 300-Hour Airframe Periodic Inspection | 5-00-00 | 81 |
| 5-28 | 100-Hour Inspection | 5-00-00 | 83 |
| 5-29 | 300-Hour Inspection | 5-00-00 | 85 |
| 5-30 | 1200-Hour Inspection | 5-00-00 | 93 |
| 5-31 | As Required by Manufacturer | 5-00-00 | 99 |
| 5-32 | Weekly Inspection | 5-00-00 | 101 |
| 5-33 | 12-Month Inspection | 5-00-00 | 103 |
| 5-34 | 12 Months of Component Operation | 5-00-00 | 105 |
| 5-35 | 24-Month Inspection | 5-00-00 | 107 |
| 5-36 | 60-Month Inspection | 5-00-00 | 111 |
| 5-37 | 300-Hour or 12-Month Inspection | 5-00-00 | 113 |
| 5-38 | 600-Hour or 12-Month Inspection | 5-00-00 | 115 |
| 5-39 | 1200 Hours of Component Operation | 5-00-00 | 117 |
| 5-40 | 1500 Hours of Component Operation | 5-00-00 | 119 |
| 5-41 | 2250 Hours or 60 Months of Component Operation | 5-00-00 | 121 |

## TABLE OF CONTENTS (CONT)


| Paragraph Number | Title | Chapter/Section Number | Page Number |
|---|---|---|---|
| 5-42 | 3000 Hours of Component Operation | 5-00-00 | 123 |
| | **SPECIAL INSPECTIONS** | | |
| 5-43 | Special Inspections | 5-00-00 | 125 |
| 5-44 | After Fuel System Maintenance and/or Component Change | 5-00-00 | 127 |
| 5-45 | 1 to 5 Hours After Each Installation | 5-00-00 | 131 |
| 5-46 | 3 to 8 Hours After Each Installation | 5-00-00 | 133 |
| 5-47 | 10 to 25 Hours After Each Installation | 5-00-00 | 135 |
| 5-48 | 100 Hours After Each Installation | 5-00-00 | 137 |
| 5-48A | Freewheel Lubrication System | 5-00-00 | 138A |
| | **CONDITIONAL INSPECTIONS** | | |
| 5-49 | Conditional Inspections | 5-00-00 | 139 |
| 5-50 | Hard Landing | 5-00-00 | 141 |
| 5-51 | Sudden Stoppage/Acceleration — Main Rotor | 5-00-00 | 147 |
| 5-52 | Sudden Stoppage/Acceleration — Tail Rotor | 5-00-00 | 153 |
| 5-53 | Overspeed Main Rotor — 114% or Greater | 5-00-00 | 157 |
| 5-54 | Overtorque | 5-00-00 | 161 |
| 5-55 | Engine Compressor Stall or Surge | 5-00-00 | 167 |
| 5-56 | Lightning Strike | 5-00-00 | 175 |
| 5-57 | Engine Overtemp | 5-00-00 | 181 |
| 5-58 | Strike Impact to Auxiliary Finlets by Main Rotor Blades | 5-00-00 | 183 |
| | **COMPONENT OVERHAUL SCHEDULE** | | |
| 5-59 | Component Overhaul Schedule | 5-00-00 | 187 |


## FIGURES


| Figure Number | Title | Page Number |
|---|---|---|
| 5-1 | Maintenance Zones | 15 |
| 5-2 | Inspection of Main Rotor Flight Control Bolts/Nuts | 109 |


## TABLES


| Table Number | Title | Page Number |
|---|---|---|
| 5-1 | 100-Hour Airframe Progressive Inspection Events | 7 |
| 5-2 | 300-Hour Airframe Progressive Inspection Events | 8 |
| 5-3 | 300-Hour Airframe Progressive or 300-Hour Airframe Periodic Inspection Program Prerequisites | 11 |
| 5-4 | Component Overhaul Schedule | 188 |

# INSPECTIONS AND COMPONENT OVERHAUL SCHEDULE

## 5-1. GENERAL

This chapter contains the time limit intervals and the requirements for the Scheduled Inspection, Special Inspection, Conditional Inspection, and for the Component Overhaul Schedule.

**WARNING**

FAILURE TO CORRECT CONDITIONS SUCH AS, BUT NOT LIMITED TO, CORROSION, EROSION, MECHANICAL DAMAGE, OR OBVIOUS WEAR FOUND DURING A SCHEDULED INSPECTION COULD SERIOUSLY AFFECT THE AIRWORTHINESS OF THE HELICOPTER.

The inspection intervals given in this chapter are the maximum permitted. Do not exceed these intervals. The owner/operator is responsible for increasing the scope and the frequency of the inspections as necessary. Make sure the helicopter is maintained safely during all unusual local changes, such as environmental conditions, helicopter use, etc. You can request changes to the requirements in this chapter through the local Aviation Authority.

The inspection intervals and the component overhaul schedule provided in this chapter are applicable only to Bell Helicopter Textron approved parts.

**NOTE**

The time period given for the overhaul of a component (or the failure to give a time period for the overhaul of a component) does not constitute a warranty of any kind. The only warranty applicable to the helicopter or any component is the warranty included in the Purchase Agreement for the helicopter or the component.

The Time Between Overhaul (TBO) and the inspection periods are determined through experience, tests, Lead The Fleet (LTF), or any other special programs and the judgement of Bell Helicopter Textron engineers. They are subject to change only by Bell Helicopter Textron or an approved Airworthiness Authority.

Changes to the TBO will be introduced by either revision to the Maintenance Manual, Chapter 5 or a Technical Bulletin.

Every calendar and hourly inspection is a thorough visual inspection to determine the airworthiness of the helicopter and the components. Qualified persons must do the inspections in accordance with quality standard aircraft practices and the applicable maintenance manuals. Bell Helicopter Textron considers that it is mandatory to obey all the applicable Alert Service Bulletins (ASB) and the Airworthiness Directives (AD).

Component operating time records are necessary for components that have scheduled maintenance procedures, which are different from those of the airframe. It is the owner/operator's responsibility to keep the Historical Service Records for the applicable component and to do the necessary maintenance procedures.

Before each inspection, remove or open the necessary cowlings, fairing, inspection doors, and panels.

## 5-2. ITEMS NOT COVERED AND INSPECTION RESPONSIBILITY

This manual does not include the specific inspection intervals for some components such as the compass calibration and the pitot static test. These specific inspection intervals are given by your government regulatory authority. Refer to their requirements for these specific inspections.

The owner/operator of the helicopter is responsible for the maintenance done on the helicopter and for ensuring that the specific time interval of any inspection procedure is not exceeded. It is the owner/operator's responsibility to:

**1.** Establish, maintain, and review the log books for discrepancies.

**2.** Make sure the Alert Service Bulletins (ASB), the Airworthiness Directives (AD), and the special

inspections are done when they are required to be done.

**3.** Make sure the scheduled inspections, the special inspections, and the required inspections for all of the installed kits are complied with.

**4.** Make sure all parts and components for which Historical Service Records are required have documented traceability to their original installation in the helicopter.

**5.** Make sure all limited life parts that have completed their published operating limits are replaced.

**6.** Make sure all of the components that have completed their published overhaul periods are overhauled.

**7.** Make sure all of the maintenance that is done on the helicopter is done by an approved maintenance organization.

The maintenance organization/person doing the maintenance is responsible for the quality of the maintenance done.

The owner/operator may choose to ask the maintenance organization/person doing the maintenance to perform the tasks listed by prior arrangement through a separate formal agreement.

## 5-3. CRASH DAMAGE

Because of the many possible combinations that can result from crash damage, it is not possible to include the specific repair tasks in this category. The helicopter mechanic must make an analysis of the crash damage for each situation. Do the repair in accordance with the degree of damage to the specific part and the applicable repair procedures in this manual. Call Bell Helicopter Textron Product Support Engineering with your analysis of the crash damage.

## 5-4. TYPES OF INSPECTIONS

**1.** The maintenance procedures may include scheduled inspections, special inspections, conditional inspections, component interim inspections, and component overhaul inspections.

**a.** Scheduled inspections must occur at specified operating intervals. The intervals may be in operating time (hours), cycles, torque events (RIN), calendar (days, months, years) or other assigned units. This makes sure that the helicopter is airworthy.

**b.** Special inspections are of a temporary nature or of a special interval that is not consistent with the scheduled inspections.

**c.** Conditional inspections do not occur at a specified time. A conditional inspection is the result of a known or suspected unusual event, known or suspected malfunctions, or defects.

**d.** An interim inspection occurs between overhauls.

**e.** The component overhaul schedule gives the elapsed operating time at which a component must be removed, disassembled, examined for condition, and overhauled, in accordance with data approved by Bell Helicopter Textron.

**2.** Lubrication and servicing requirements are in addition to those stated in this chapter (Chapter 12).

**3.** For corrosion control, refer to the Corrosion Control Guide, CSSD-PSE-87-001 and the BHT-ALL-SPM.

**4.** For the 250-C30 series engine, refer to the Rolls-Royce Operations and Maintenance Manual (14W2) for the scheduled inspection, special inspection, conditional inspection, and component overhaul schedule.

**5.** For the common Bell Helicopter Textron approved optional equipment that is integrated into this Maintenance Manual, refer to this chapter for the scheduled inspection, conditional inspection, component interim inspection, and component overhaul inspection.

**6.** For all other Bell Helicopter Textron approved equipment, refer to the applicable information in this Maintenance Manual or the specific Service Instruction (SI) for the scheduled inspection, special inspection, conditional inspection, component interim inspection, and component overhaul inspection.

**7.** For the inspection requirements for optional equipment approved under Supplement Type

Approval/Certificate (STA/STC), refer to the applicable STA/STC documentation. Maintenance and inspection of these items are the responsibility of the owner/operator.

## 5-5. DEFINITIONS

- Check, inspect, examine — Look carefully to find the condition of the component. Find how that condition relates to a specific standard.

- Condition — The state of an item compared to a known standard.

- Security — The presence of attaching parts that are properly tightened or appear to be, and the presence of properly installed (as required) locking devices such as lockwire, cotter pins, or other.

- Standard — A specified rule or measure that you use to find the condition of a component.

- Damage — Physical deterioration of a component.

- Discard — Reject a component that has damage that cannot be repaired. To permanently remove from service.

- Inspection — A procedure that includes checking, inspecting, and examining a system or a component.

- Non-scheduled inspection — An inspection that has not been scheduled.

- Periodic inspection — An inspection that is repeated at equal time intervals.

- Progressive inspection — A scheduled inspection that is divided into smaller segments. This makes the best use of the time and the resources available.

- Maintenance — The servicing and/or the repair of a helicopter, a system, or a component that keeps it serviceable.

- Preventive maintenance — To do small maintenance action(s) on a regular basis to prevent non-scheduled maintenance.

- Operating time — Actual flight or calendar time that must be recorded in the Historical Service Records or in the helicopter logs. The operating time is specified as:

  - Time in service (flight time) — The measured time that starts the moment the helicopter leaves the ground and continues until it touches the ground at the next point of landing. The time when the helicopter is on the ground, with the engine and the rotor turning, is not included.

  - Calendar time — The elapsed time starts on the day the inspection is completed, the component is installed, or the rotor is turned for the first time and ends on the last day of the month that the time limit expires. Calendar time is continuous. Calendar time does not stop when you remove a component, put the helicopter in storage, etc.

- Maintenance zone — A specified area of the helicopter that may contain more than one system or more than one group of related components. Maintenance zones (Figure 5-1) are used when you do a progressive inspection.

- Lead-The-Fleet (LTF) Program — This is a program to validate the performance of an approved product improvement or a change to a maintenance interval. The engineering aspects of this change are approved. The program is closely monitored by Bell Helicopter Textron in an operational environment with selected operators.

- Special Programs — These are approved programs that may be initiated under certain special conditions to meet specific requirements. These programs will be clearly defined through a plan and the engineering and maintenance aspects will be approved by the regulatory authorities.

## 5-6. INSPECTION AND OVERHAUL TOLERANCE

**WARNING**

DO NOT APPLY THESE TOLERANCES TO PARTS WITH A LIMITED AIRWORTHINESS LIFE (CHAPTER 4).

The Bell Helicopter Textron approved tolerance for scheduled inspections, special inspections, interim inspections, and overhaul intervals, unless otherwise stated, is 10% or up to a maximum of 300 hours operating time/6 months calendar time, whichever is less. The tolerances are established for maintenance scheduling convenience only.

Scheduled inspections, special inspections, interim inspections, or overhaul intervals required beyond the stated tolerances must be approved by Product Support Engineering.

**NOTE**

The following is only applicable for those operators whose governing aviation authority requires to specifically approve the inspection and overhaul tolerance.

If approval of the inspection and overhaul tolerance is required by the applicable governing aviation authority, this is the responsibility of the owner/operator.

Refer to the Rolls-Royce 250-C30 Series Operation and Maintenance Manual (14W2) for inspection and overhaul tolerances.

The following provide examples of when hourly, calendar, or hourly/calendar inspection tolerances have been applied:

**Hourly Example (10% or up to a maximum of 300 hours, whichever is less):**

| 300-HOUR INSPECTION DUE AT: | MAXIMUM ALLOWED TOLERANCE | INSPECTION CARRIED OUT AT: | NEXT 300-HOUR INSPECTION DUE AT: |
|---|---|---|---|
| 3400 Hours | 10% of 300 hours = 30 hours | 3430 Hours (10% tolerance applied) | 3730 Hours |
| 3730 Hours | 10% of 300 hours = 30 hours | 3750 Hours (within 10% tolerance) | 4050 Hours |
| 4050 Hours | 10% of 300 hours = 30 hours | 4050 Hours (tolerance not applied) | 4350 Hours |

**Calendar Example (10% or up to a maximum of 6 months calendar time, whichever is less):**

| 12-MONTH INSPECTION DUE ON: | MAXIMUM ALLOWED TOLERANCE | INSPECTION CARRIED OUT ON: | NEXT 12-MONTH INSPECTION DUE ON: |
|---|---|---|---|
| June 10, 2010 | 10% of 12 months = 1.2 months | July 12, 2010 (within 10% tolerance) | July 31, 2011 △1 |
| July 31, 2011 | 10% of 12 months = 1.2 months | June 15, 2011 (completed early) | June 30, 2012 △1 |
| June 30, 2012 | 10% of 12 months = 1.2 months | June 30, 2012 (tolerance not applied) | June 30, 2013 △1 |

**NOTE:**

△1 The last day of the month applies for the next inspection (paragraph 5-5, calendar time).

**Hourly/Calendar Example (10% or up to a maximum of 300 hours operating time/6 months calendar time, whichever is less):**

| 2250-HOUR/ 60-MONTH INSPECTION DUE AT: | MAXIMUM ALLOWED TOLERANCE | INSPECTION CARRIED OUT AT: | NEXT 2250-HOUR/ 60-MONTH INSPECTION DUE AT: |
|---|---|---|---|
| 3400 Hours/ August 31, 2010 | 10% of 2250 hours = 225 hours or 10% of 60 months = 6 months | 3400 Hours/February 15, 2011 (within 10% calendar tolerance) | 5650 Hours/ February 29, 2016 △1 |
| 5650 Hours/ February 29, 2016 | 10% of 2250 hours = 225 hours or 10% of 60 months = 6 months | 5875 Hours/April 2, 2016 (10% hourly tolerance applied) | 8125 Hours/ April 30, 2021 △1 |
| 8125 Hours/ April 30, 2021 | 10% of 2250 hours = 225 hours or 10% of 60 months = 6 months | 8325 Hours/August 3, 2021 (within 10% hourly and calendar tolerance) | 10,575 Hours/ August 31, 2026 △1 |

**NOTE:**

△1 The last day of the month applies for the next inspection (paragraph 5-5, calendar time).

## 5-7. SCHEDULED INSPECTIONS

**WARNING**

FAILURE TO CORRECT CONDITIONS SUCH AS, BUT NOT LIMITED TO, CORROSION, EROSION, MECHANICAL DAMAGE, OR OBVIOUS WEAR FOUND DURING A SCHEDULED INSPECTION COULD SERIOUSLY AFFECT THE AIRWORTHINESS OF THE HELICOPTER.

Scheduled inspections include the airframe and the component inspections. The scheduled airframe inspection intervals are related to the airframe operating time. The component inspection intervals are related to the component operating time.

## 5-8. AIRFRAME INSPECTION PROGRAM

Bell Helicopter Textron has developed airframe inspection programs to provide you with the flexibility to permit maximum helicopter use. Depending on the configuration of the helicopter, a 100 or 300-hour airframe progressive inspection as well as a 100 or 300-hour airframe periodic inspection is available. You may choose one of these Bell Helicopter inspection programs or you can design your own program. You are responsible for the selection of an inspection program and for its approval by the governing civil aviation authority.

## 5-9. AIRFRAME PROGRESSIVE INSPECTION PROGRAMS

If you choose one of the airframe progressive inspection programs, you must first get approval from your local airworthiness authority. The progressive inspections are divided into separate events of similar workload (Table 5-1, Table 5-2, and Figure 5-1).

**NOTE**

All conditions of Table 5-3 must be met to utilize the 300-hour airframe progressive inspection.

Depending on the helicopter configuration, you have the option to either use the 100-hour airframe progressive inspection program or the 300-hour airframe progressive inspection program. To determine helicopter eligibility to utilize the 300-hour airframe progressive inspection program, refer to Table 5-3.

## 5-10. 100-HOUR AIRFRAME PROGRESSIVE INSPECTION PROGRAM

The 100-hour airframe progressive inspection program has 4 events. Events occur at intervals of 25 hours. After you complete event No. 4, the cycle begins again with event No. 1 (Table 5-1). You must do a minimum of one complete cycle (all four events) within 12 calendar months. If you do not complete all four events in a 12 calendar month period, the remaining events must be completed prior to operating the helicopter.

**Table 5-1. 100-Hour Airframe Progressive Inspection Events**

| AIRFRAME HOURS | EVENT NUMBER | MAINTENANCE ZONES |
|---|---|---|
| 25 | 1 | 1, 2, and 3 |
| 50 | 2 | 4 and 5 |
| 75 | 3 | 6 |
| 100 | 4 | 7, 8, 9, and 10 |

In addition to performing the 100-hour airframe progressive inspection program, you also need to perform and record the following scheduled inspections:

**NOTE**

Every 300 hours of operation, helicopters completing the 100-hour airframe progressive inspection program also need to accomplish the 300-hour inspection.

- 300-hour inspection
- 1200-hour inspection
- As required by manufacturer

- Weekly inspection
- 12-month inspection
- 12 months of component operation
- 24-month inspection
- 60-month inspection
- 300-hour or 12-month inspection
- 600-hour or 12-month inspection
- 1200 hours of component operation
- 1500 hours of component operation
- 2250 hours or 60 months of component operation
- 3000 hours of component operation

## 5-11. 300-HOUR AIRFRAME PROGRESSIVE INSPECTION PROGRAM

The 300-hour airframe progressive inspection program has 6 events. Events occur at intervals of 50 hours. After you complete event No. 6, the cycle begins again with event No. 1 (Table 5-2). You must do a minimum of one complete cycle (all six events) within 12 calendar months. If you do not complete all six events in a 12 calendar month period, the remaining events must be completed prior to operating the helicopter.

**Table 5-2. 300-Hour Airframe Progressive Inspection Events**

| AIRFRAME HOURS | EVENT NUMBER | MAINTENANCE ZONES |
|---|---|---|
| 50 | 1 | 1 and 2 |
| 100 | 2 | 3 |
| 150 | 3 | 4 |
| 200 | 4 | 5 and 6 |
| 250 | 5 | 7 and 8 |
| 300 | 6 | 9 and 10 |

In addition to performing the 300-hour airframe progressive inspection program, you also need to perform and record the following scheduled inspections:

**NOTE**

Helicopters completing the 300-hour airframe progressive inspection program also need to accomplish the 100-hour inspection.

- 100-hour inspection
- 1200-hour inspection
- As required by manufacturer
- Weekly inspection
- 12-month inspection
- 12 months of component operation
- 24-month inspection
- 60-month inspection
- Deleted
- 600-hour or 12-month inspection
- 1200 hours of component operation
- 1500 hours of component operation
- 2250 hours or 60 months of component operation
- 3000 hours of component operation

## 5-12. AIRFRAME PERIODIC INSPECTION PROGRAM

The airframe periodic inspection combines all of the events of the 100 or 300-hour progressive inspection into one event.

**NOTE**

All conditions of Table 5-3 must be met to utilize the 300-hour airframe periodic inspection.

Depending on the helicopter configuration, you have the option to either use the 100-hour airframe periodic inspection program or the 300-hour airframe periodic inspection program. To determine the helicopter eligibility to utilize the 300-hour airframe periodic inspection program, refer to Table 5-3.

## 5-13. 100-HOUR AIRFRAME PERIODIC INSPECTION PROGRAM

Do a 100-hour airframe periodic inspection program every 12 calendar months or every 100 hours, whichever occurs first. You must do a minimum of one complete 100-hour airframe periodic inspection within 12 calendar months.

In addition to performing the 100-hour airframe periodic inspection program, you also need to perform and record the following scheduled inspections:

**NOTE**

Every 300 hours of operation, helicopters completing the 100-hour airframe periodic inspection program also need to accomplish the 300-hour inspection.

- 300-hour inspection
- 1200-hour inspection
- As required by manufacturer
- Weekly inspection
- 12-month inspection
- 12 months of component operation
- 24-month inspection
- 60-month inspection
- 300-hour or 12-month inspection
- 600-hour or 12-month inspection
- 1200 hours of component operation
- 1500 hours of component operation
- 2250 hours or 60 months of component operation
- 3000 hours of component operation

## 5-14. 300-HOUR AIRFRAME PERIODIC INSPECTION PROGRAM

Do a 300 Hour Airframe Periodic Inspection Program every 12 calendar months or every 300 hours, whichever occurs first. You must do a minimum of one complete 300 Hour Airframe Periodic Inspection within 12 calendar months.

In addition to performing the 300-hour airframe periodic inspection program you also need to perform and record the following scheduled inspections:

**NOTE**

Helicopters completing the 300-hour airframe periodic inspection program also need to accomplish the 100-hour inspection.

- 100-hour inspection
- 1200-hour inspection
- As required by manufacturer
- Weekly inspection
- 12-month inspection
- 12 months of component operation
- 24-month inspection
- 60-month inspection
- Deleted
- 600-hour or 12-month inspection
- 1200 hours of component operation
- 1500 hours of component operation
- 2250 hours or 60 months of component operation
- 3000 Hours of Component Operation

## 5-15. CHANGING INSPECTION PROGRAM

You must use either the airframe periodic inspection program or the airframe progressive inspection program from the start. You can change between the two programs at any airframe operating time as follows:

- To change from a 100-hour airframe progressive inspection program to a 100-hour airframe periodic inspection program, do a complete 100-hour airframe periodic inspection.

- To change from a 100-hour airframe periodic inspection program to a 100-hour airframe progressive inspection program, do a complete 100-hour airframe periodic inspection.

- To change from a 300-hour airframe progressive inspection program to a 300-hour airframe periodic inspection program, do a complete 300-hour airframe periodic inspection.

- To change from a 300-hour airframe periodic inspection program to a 300-hour airframe progressive inspection program, do a complete 300-hour airframe periodic inspection.

**Table 5-3. 300-Hour Airframe Progressive or 300-Hour Airframe Periodic Inspection Program Prerequisites**

| NOMENCLATURE | PART NUMBER △2 | BULLETIN REFERENCE | ACCEPTABLE ALTERNATES | 206L | 206L1 | 206L3 | 206L4 | 206L1+ AND 206L3+ IGW UPGRADE |
|---|---|---|---|---|---|---|---|---|
| Swashplate and Support Assembly | 206-010-450-123 | TB 206L-00-201 | 206-010-450-101 is an acceptable alternate to 206-010-450-123. | | | | X | X |
| | 206-010-450-131 | TB 206L-00-201 | | X | X | X | | |
| Main Rotor Hub Assembly | 206-011-100-105 | TB 206L-91-152 | 206-011-100-159 is an acceptable alternate provided ASB 206L-97-108 is accomplished. | X | X | X | X | X |
| Tail Rotor Hub Assembly | 206-011-810-153 | TB 206L-09-239 | | X | X | X | X | X |
| | 206-011-749-107 | High Altitude Tail Rotor Kit BHT-SI-2054 | | | | | X | X |
| Tailboom Attachment Fittings and Longeron Assembly | 206-031-314-157A or 206-031-314-217B | TB 206L-07-226 or PSE Instructions | | X | X | X | X | X |
| Forward Engine Mount Fittings | 206-031-629-103 | BHT-206-SRM | | X | X | X | X | X |
| Tailboom Assembly | 206-033-004-175/-177 or equivalent with ASB 206L-99-115 accomplished | TB 206L-05-220 | 206-033-004-181, -199, or -203 and 206-704-727-101. | X | X | X | X | X |
| Transmission Restraint | 206-033-506-103 | | 206-033-506-107 and -109 are acceptable alternates to 206-033-506-103. | X | X | X | X | X |

Table 5-3. 300-Hour Airframe Progressive or 300-Hour Airframe Periodic Inspection Program Prerequisites (Cont)

| NOMENCLATURE | PART NUMBER 2 | BULLETIN REFERENCE | ACCEPTABLE ALTERNATES | 206L | 206L1 | 206L3 | 206L4 | 206L1+ AND 206L3+ IGW UPGRADE |
|---|---|---|---|---|---|---|---|---|
| Transmission Assembly | 206-040-004-107 | TB 206L-91-153<br>TB 206L-08-229 | | X | X | X | | |
| | 206-040-004-115 | | | | | | X | X |
| Mast Assembly | 206-040-014-103 | TB 206L-99-195 | | X | X | X | | |
| | 206-040-014-107 | TB 206L-99-195 | | | | | X | X |
| Main Driveshaft Assembly (Grease Lubricated) | 206-040-015-011 | ASB 206L-93-91 | | X | | | | |
| | 206-040-015-015 | ASB 206L-93-91 | | | X | X | | |
| Freewheel Assembly | 206-040-270-117 | TB 206L-01-205 | | X | | | | |
| | 206-040-270-123 | TB 206L-01-205 | | | X | X | | |
| Riveted Aft Short Shaft | 206-040-383-101 | TB 206L-02-207 | | | | | X | X |
| Riveted Tail Rotor Driveshaft Assembly | 206-040-387-101 | TB 206L-02-207 | 206-040-370-107/-109/ -115 are acceptable fielded substitutes for 206-040-387-101. | X | X | X | X | X |
| Tail Rotor Gearbox Assembly | 206-040-402-111 | TB 206L-99-197 | 206-040-402-101/-107 are acceptable fielded substitutes for 206-040-402-111. | X | X | X | X | X |
| | 206-040-402-103 | High Altitude Tail Rotor Kit BHT-SI-2054 | | | | | X | X |
| Oil Cooler Blower Impeller | 206-061-432-109 | ASB 206L-86-40 | | X | X | X | X | X |

**Table 5-3. 300-Hour Airframe Progressive or 300-Hour Airframe Periodic Inspection Program Prerequisites (Cont)**

| NOMENCLATURE | PART NUMBER △2 | BULLETIN REFERENCE | ACCEPTABLE ALTERNATES | 206L | 206L1 | 206L3 | 206L4 | 206L1+ AND 206L3+ IGW UPGRADE |
|---|---|---|---|---|---|---|---|---|
| Main Driveshaft Assembly (KAflex) | 206-340-300-105 | ASB 206L-01-123<br>TB 206L-01-204 | 206-340-300-105M is an acceptable fielded substitute for 206-340-300-105. | | | | X | X |
| Freewheel Assembly | 406-040-500-113 with TB 206L-02-208 and ASB 206L-07-147 accomplished. | TB 206L-01-205 | | | | | X | X |
| Aft Fuselage Bulkhead | 407-030-027-103 | TB 206L-07-226 | | X | X | X | X | X |
| FACET Scavenge Oil Filter System △4 | Purolator Kit Number STC # SH200GL | | | X | X | X | X | X |

**NOTES:**

1. Table 5-3 is not to be used as a configuration listing for the installation of components on 206L Series Helicopters. It is only provided as a prerequisite listing to determine applicability to use the 300-hour airframe progressive inspection program or 300-hour airframe periodic inspection program, as applicable. Refer to the bulletins listed within the table for configuration data as required.

△2 To qualify for the 300-hour airframe progressive inspection program or the 300-hour airframe periodic inspection program, the helicopter must have all of the parts listed installed (or subsequent part numbers to those listed based on configuration/eligibility requirements).

3. If the helicopter does not have all of the parts listed in this table installed, the helicopter is limited to either the 100-hour airframe progressive inspection or the 100-hour airframe periodic inspection.

△4 FACET scavenge oil filter system available from Purolator Facet, Inc., www.purolator-facet.com.

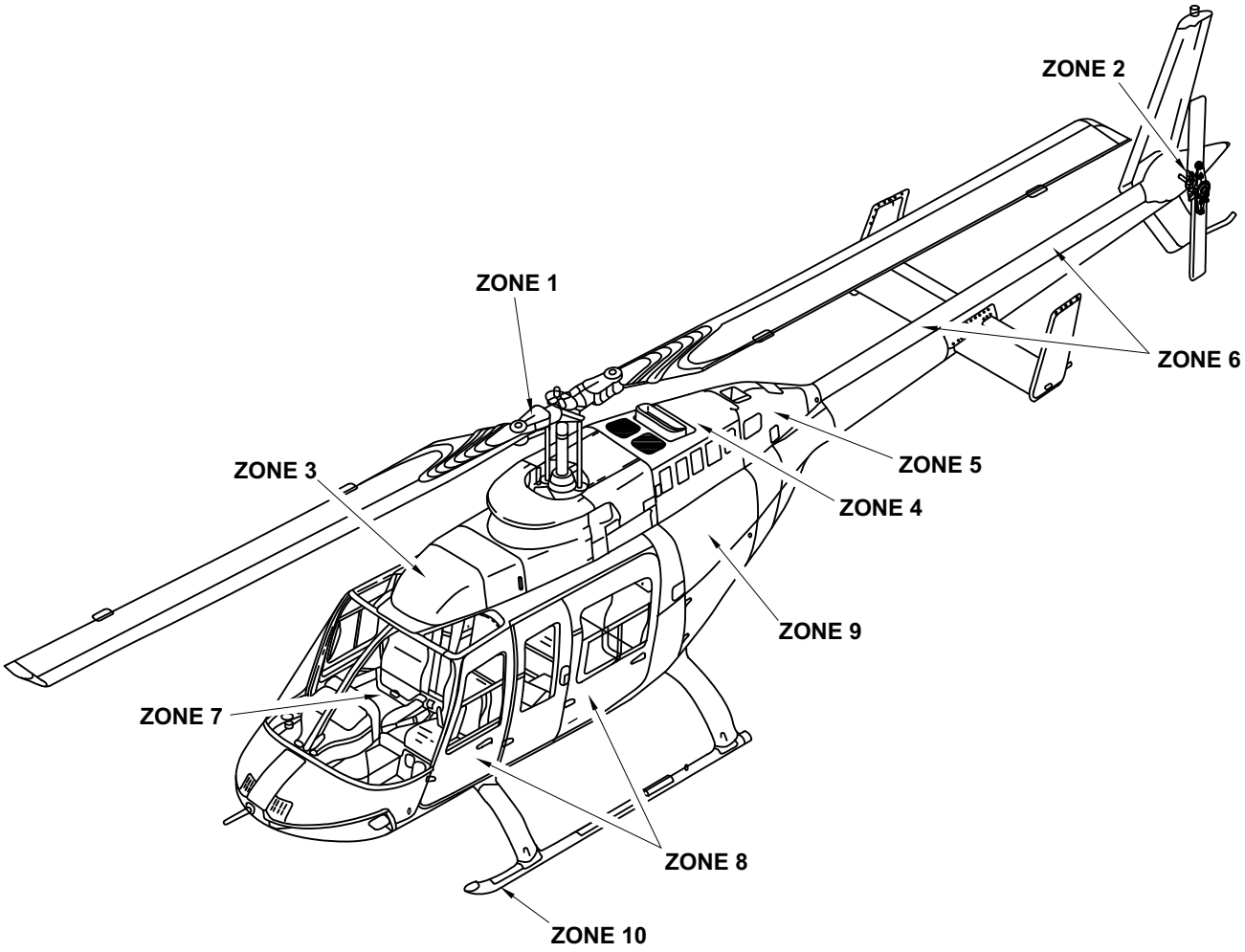


Zone 1 - Main rotor hub and blade assembly
Zone 2 - Tail rotor hub and blade assembly
Zone 3 - Forward top deck
Zone 4 - Power plant
Zone 5 - Aft top deck
Zone 6 - Tailboom
Zone 7 - Cabin interior
Zone 8 - Foward fuselage
Zone 9 - Aft fuselage
Zone 10 - Landing gear

206L4_MM_05_0001

**Figure 5-1. Maintenance Zones**

# PROGRESSIVE INSPECTIONS

## 5-16. 100-HOUR AIRFRAME PROGRESSIVE INSPECTION — EVENT NO. 1

| DATA REFERENCE | INSPECTION TASK DESCRIPTION | INITIAL MECH | INITIAL OTHER |
|---|---|---|---|
| | **DATE:** _____ **W.O.** _____<br>**FACILITY:** _____<br>**HELICOPTER S/N:** _____<br>**REGISTRY NO.:** _____<br>**TOTAL TIME:** _____<br>**SIGNATURE:** _____ | | |
| | **ZONE 1 — MAIN ROTOR SYSTEM** | | |
| Chapter 11 | **PLACARDS AND MARKINGS** | | |
| | **1.** Examine the placards, decals and markings. Make sure they are readable, correctly applied and in agreement with the applicable configuration of your helicopter. | | |
| Chapter 62 | **MAIN ROTOR SYSTEM** | | |
| | **1.** Verify main rotor flap restraint for freedom of movement, and for condition and security. | | |
| | **2.** Examine static stops and mast for evidence of mast bumping. | | |
| | **3.** Remove main rotor blade leading edge erosion protection tape, if installed. | | |
| | **4.** Examine main rotor blades for cleanliness and overall condition. Examine for cracks, corrosion and de-bonding of doublers. | | |
| | **5.** Examine leading edge of blades for corrosion and erosion. Restore contour as necessary. | | |
| | **6.** Examine the tip weight cap for corrosion, cracks, erosion, and deformation. | | |

# PROGRESSIVE INSPECTIONS

## 5-16. 100-HOUR AIRFRAME PROGRESSIVE INSPECTION — EVENT NO. 1 (CONT)

| DATA REFERENCE | INSPECTION TASK DESCRIPTION | INITIAL MECH | INITIAL OTHER |
|---|---|---|---|
| | **7.** If applicable, reinstall main rotor blade leading edge erosion protection tape.<br><br>**8.** Examine the following main rotor hub assembly components for condition and security:<br><br>**a.** Mast nut<br><br>**b.** Trunnion<br><br>**c.** Pillow blocks<br><br>**d.** Grips<br><br>**e.** Pitch horns<br><br>**f.** Static stops<br><br>**9.** Examine pitch horn trunnion bearings for evidence of wear, damage, and for security.<br><br>**10.** Torque check pillow block retention hardware 84 to 107 inch-pounds (9.4 to 12 Nm). Examine for misalignment of anti-slippage marks.<br><br>**11.** Examine main rotor yoke for corrosion or mechanical damage as follows:<br><br>**a.** Examine fillet radius of both yoke spindles inboard of wear sleeves for evidence of corrosion. If corrosion is visible, remove with fine abrasive pad (C-407). If corrosion cannot be removed with pads, or is extensive, disassemble hub for inspection and repair.<br><br>**NOTE**<br><br>If the main rotor hub must be disassembled, omit remaining steps.<br><br>**b.** Examine entire yoke centre section (inboard and outboard surfaces) for damage. | | |
| BHT-206L-CR&O | | | |

# PROGRESSIVE INSPECTIONS

## 5-16. 100-HOUR AIRFRAME PROGRESSIVE INSPECTION — EVENT NO. 1 (CONT)

| DATA REFERENCE | INSPECTION TASK DESCRIPTION | INITIAL MECH | INITIAL OTHER |
|---|---|---|---|
| | **c.** Touch up all repaired areas or areas of bare metal in accordance with applicable main rotor hub inspection and repair instructions. | | |
| | **d.** Ensure no sealant voids are visible around shields or wear sleeve, strap fittings, and grip closure. Recoat with sealant (C-308) as required. On main rotor hub assemblies up to and including P/N 206-011-100-025, coat the remaining exposed fillet radius and repaired surfaces with a film of corrosion preventive compound (C-101). | | |
| | **ZONE 2 — TAIL ROTOR ASSEMBLY** | | |
| Chapter 11 | **PLACARDS AND MARKINGS** | | |
| | **1.** Examine the placards, decals and markings. Make sure they are readable, correctly applied and in agreement with the applicable configuration of your helicopter. | | |
| Chapter 64 | **TAIL ROTOR ASSEMBLY** | | |
| | **1.** Clean tail rotor blades to maintain visibility of warning stripes. | | |
| BHT-206L-CR&O | **2.** Examine the following tail rotor hub assembly components for condition and security of attachment: | | |
| | **a.** Yoke | | |
| | **b.** Pitch horns | | |
| | **c.** Trunnion and trunnion caps | | |
| | **d.** Counterweight hardware | | |
| Chapter 64 | **3.** Examine tail rotor blades as follows: | | |
| | **a.** Tip block rivets for damage, corrosion, erosion, and looseness. | | |
| | **b.** Skin for bulges, nicks, dents, scratches, or other damage. | | |

# PROGRESSIVE INSPECTIONS

## 5-16. 100-HOUR AIRFRAME PROGRESSIVE INSPECTION — EVENT NO. 1 (CONT)

| DATA REFERENCE | INSPECTION TASK DESCRIPTION | INITIAL MECH | INITIAL OTHER |
|---|---|---|---|
| | **c.** Deformed or cracked skin in the area of the chordwise weights. | | |
| | **d.** Leading edge for erosion, nicks, dents or scratches. | | |
| | **e.** Bonded joints of blade skin mating area for suspected voids or cracks. Pay particular attention in the area of tip block and doublers. | | |
| | **f.** Feathering bearings for looseness and cracks in uniball. | | |
| | **4.** Examine the following tail rotor hub and blade assembly attaching components for condition and security: | | |
| | **a.** Spacer | | |
| | **b.** Rubber bumper | | |
| | **c.** Static stop | | |
| | **d.** Nut | | |
| | **e.** Balance wheel | | |
| | **ZONE 3 — FORWARD DECK** | | |
| Chapter 11 | **PLACARDS AND MARKINGS** | | |
| | **1.** Examine the placards, decals and markings. Make sure they are readable, correctly applied and in agreement with the applicable configuration of your helicopter. | | |
| | **AIRFRAME (FORWARD DECK)** | | |
| Chapter 71 | **1.** Open and examine forward fairing for condition and security. | | |
| | **2.** Remove and examine transmission cowling for condition. | | |
| | **3.** Examine all fairing and cowling latches and/or fasteners for condition | | |
| | **4.** Examine top deck for condition, leaks and security. | | |

# PROGRESSIVE INSPECTIONS

## 5-16. 100-HOUR AIRFRAME PROGRESSIVE INSPECTION — EVENT NO. 1 (CONT)

| DATA REFERENCE | INSPECTION TASK DESCRIPTION | INITIAL MECH | INITIAL OTHER |
|---|---|---|---|
| Chapter 53 | **5.** Clean transmission deck. | | |
| | **6.** Examine air induction cowling and plenum for damage, obstructions and cleanliness. Examine intake fairing windows for damage and cleanliness. | | |
| | **7.** Examine inlet screen (if applicable) for missing or damaged wires and rivets. | | |
| | **8.** Examine particle separator (if applicable) vortex tubes, ejector tubes, and ejector nozzles for cleanliness, condition, and security. | | |
| | **9.** Examine forward deck drain(s) to ensure absence of obstruction. | | |
| | **10.** Examine antennas for condition and security. | | |
| Chapter 67 | **CONTROLS** | | |
| | **1.** Examine the following flight control components for signs of interference, corrosion, wear, mechanical damage and security: | | |
| | **a.** Control tubes. | | |
| | **b.** Links. | | |
| | **c.** Rod and bearings. | | |
| | **d.** Bellcranks. | | |
| | **e.** Bellcrank supports. | | |
| | **f.** Attaching bolts and nuts. | | |
| | **2.** Inspect main rotor pitch links with a 3X magnifying glass for damage, corrosion and cracks. Give particular attention to swaged ends at jam nut or inserts. | | |
| Chapter 76 | **3.** Examine $N_2$ control linkages on forward deck for condition and security. Pay particular attention to the jackshaft assembly for damage or evidence or twisting. | | |

# PROGRESSIVE INSPECTIONS

## 5-16. 100-HOUR AIRFRAME PROGRESSIVE INSPECTION — EVENT NO. 1 (CONT)

| DATA REFERENCE | INSPECTION TASK DESCRIPTION | INITIAL MECH | INITIAL OTHER |
|---|---|---|---|
| | **4.** Verify all control tubes and bellcranks for freedom of travel throughout range. | | |
| Chapter 62 | **SWASHPLATE ASSEMBLY AND MAST** | | |
| | **1.** Clean swashplate assembly and mast. | | |
| | **2.** Disconnect main rotor pitch links from outer ring. | | |
| | **3.** Disconnect idler (drive) link from outer ring. | | |
| | **4.** Examine swashplate drive assembly for axial, radial, and accumulative wear. | | |
| | **5.** Disconnect boot from swashplate outer ring and lift up temporarily. Examine boot for evidence of deterioration. | | |
| | **6.** Verify condition of duplex bearing, before lubrication, as follows: | | |
| | **a.** Rotate outer ring to check duplex bearing for condition. Bearing must be smooth and show no evidence of roughness, binding, dragging, or looseness. | | |
| | **7.** Examine pivot sleeve slot sidewalls for wear or deterioration. | | |
| | **8.** Examine pivot sleeve bearings for wear, deterioration and evidence of excessive axial play between pivot sleeve and swashplate support. | | |
| | **9.** Examine collar set bushings for cracks and damage. | | |
| | **10.** Examine swashplate support and uniball surfaces for condition. | | |
| | **11.** Examine collective lever to sleeve assembly pins for condition. | | |
| | **12.** Examine inner ring for condition. Examine for evidence of contact with sleeve assembly. | | |
| | **13.** Examine outer ring for condition. | | |

# PROGRESSIVE INSPECTIONS

## 5-16. 100-HOUR AIRFRAME PROGRESSIVE INSPECTION — EVENT NO. 1 (CONT)

| DATA REFERENCE | INSPECTION TASK DESCRIPTION | INITIAL MECH | INITIAL OTHER |
|---|---|---|---|
| | **14.** Examine the upper inside diameter of swashplate support for evidence of contact with the mast pole. | | |
| | **15.** Connect and secure boot, idler (drive) link and main rotor pitch links to outer ring. | | |
| | **16.** Examine swashplate assembly for condition and security. | | |
| Chapter 63 | **17.** Examine mast for condition. | | |
| Chapter 62 | **18.** Ensure no sealant voids are visible around the swashplate drive collar set. Re-coat with adhesive (C-307) as required. | | |
| Chapter 29 | **HYDRAULIC SYSTEM** | | |
| | **1.** Examine rigid and flexible fluid lines for chafing, leaks and security. | | |
| | **2.** Examine hydraulic pump for leaks and general condition. | | |
| | **3.** Examine hydraulic reservoir for leaks and general condition. | | |
| | **4.** Examine servo actuators for leaks, condition and security. | | |
| | **5.** Examine servo actuator support for condition. | | |
| Chapter 67 | **6.** Verify linkage pivot bolts on hydraulic servo actuators for freedom of rotation and security. | | |
| | **7.** Examine hydraulic filter red indicator button (two locations). Button should not be extended. | | |
| Chapter 12 | **8.** Verify fluid level in hydraulic tank. Replenish as required. Replace fluid if color has changed color or if fluid emits bad odor. | | |
| | **9.** Examine manifold, relief valve, and solenoid valve for leaks, condition and security. | | |
| Chapter 63 | **TRANSMISSION AND PYLON ASSEMBLY** | | |
| | **1.** Examine the following pylon support components: | | |

# PROGRESSIVE INSPECTIONS

## 5-16. 100-HOUR AIRFRAME PROGRESSIVE INSPECTION — EVENT NO. 1 (CONT)

| DATA REFERENCE | INSPECTION TASK DESCRIPTION | INITIAL MECH | INITIAL OTHER |
|---|---|---|---|
| | **a.** Transmission link assemblies and bearings for damage and deterioration.<br><br>**b.** Nodal beam flexures for condition and security.<br><br>**c.** Forward and aft nodal beam deck supports for condition and security. Check torque on heads of bolts only (bolts must not rotate). If a bolt is loose, remove nut. Install new nut and torque 75 to 95 inch-pounds (8.4 to 10.7 Nm).<br><br>**d.** Nodal beam stops for evidence of excessive contact with nodal beam arms.<br><br>**e.** Transmission restraint for damage and spherical bearings for excessive wear and security.<br><br>**f.** Stop mount for condition and security. Stop mount bushings for wear.<br><br>**g.** All pylon support elastomeric components for evidence of deterioration.<br><br>**h.** All pylon support hardware for security of attachment.<br><br>**2.** Examine transmission assembly for condition and security.<br><br>**3.** Examine transmission assembly for evidence of oil leakage.<br><br>**4.** Examine all fluid lines for chafing, damage and evidence of leakage.<br><br>**5.** Examine transmission oil for evidence of contamination.<br><br>**6.** Examine transmission oil filter bypass indicator for condition. Bypass button should not be extended.<br><br>**7.** Inspect all transmission chip detectors for accumulated material.<br><br>**8.** Perform functional test of all transmission chip detectors. | | |

# PROGRESSIVE INSPECTIONS

## 5-16. 100-HOUR AIRFRAME PROGRESSIVE INSPECTION — EVENT NO. 1 (CONT)

| DATA REFERENCE | INSPECTION TASK DESCRIPTION | INITIAL MECH | INITIAL OTHER |
|---|---|---|---|
| | **9.** Ensure no sealant voids are visible around forward and aft nodal beam deck mounted supports and isolation mount. Recoat with sealant (C-308) as required. | | |
| | **MAIN DRIVESHAFT** | | |
| Chapter 63 | **1.** Examine the engine to transmission driveshaft for condition and security. Examine the components as follows:<br><br>**a.** Driveshaft for cracks, corrosion, and surface damage.<br><br>**b.** Flexframe and bolts for condition and signs of slippage. | | |
| Chapter 96 | **ELECTRICAL**<br><br>**1.** Examine all electrical components, wires, cables and connectors in the area of the forward deck and transmission for chafing, general condition, and security. | | |
| | **GROUND RUN**<br><br>**CAUTION**<br><br>GROUND RUN OF HELICOPTER TO BE ACCOMPLISHED BY QUALIFIED PERSONNEL ONLY. | | |
| Chapter 12 | **1.** Make sure applicable servicing requirements have been carried out.<br><br>**2.** Check oil level of transmission, hydraulic tank, engine and rail rotor gearbox prior to running helicopter.<br><br>**3.** Make sure that helicopter is ready for ground run and that surrounding area is clear. | | |
| BHT-206L4-FM-1 | **4.** Start the helicopter and conduct ground run at 100% $N_R$ to check for leaks and ensure all systems are operational and parameters are within Flight Manual limitations. | | |

# PROGRESSIVE INSPECTIONS

## 5-17. 100-HOUR AIRFRAME PROGRESSIVE INSPECTION — EVENT NO. 2

| DATA REFERENCE | INSPECTION TASK DESCRIPTION | INITIAL MECH | INITIAL OTHER |
|---|---|---|---|
| | **DATE: _____ W.O. _____** | | |
| | **FACILITY: _____** | | |
| | **HELICOPTER S/N: _____** | | |
| | **REGISTRY NO.: _____** | | |
| | **TOTAL TIME: _____** | | |
| | **SIGNATURE: _____** | | |
| | **ZONE 4 — POWER PLANT** | | |
| Chapter 11 | **PLACARDS AND MARKINGS** | | |
| | **1.** Examine the placards, decals and markings. Ensure they are readable, correctly applied and in agreement with the applicable configuration of your helicopter. | | |
| | **AIRFRAME (POWER PLANT AREA)** | | |
| Chapter 71 | **1.** Examine firewalls for condition and security. | | |
| | **2.** Examine engine pan area for evidence of loose fasteners and damage. Restore cracked or missing sealant form engine pan. | | |
| | **3.** Examine engine pan drains. Make sure that they are not clogged. | | |
| Chapter 28 | **4.** Examine airframe fuel filter assembly for evidence of leakage and security. | | |
| Chapter 71 | **5.** Examine engine mount legs for condition and security. Pay particular attention for loose fasteners. | | |
| | **6.** Examine engine mount fittings for condition and security. | | |
| Applicable Service Instruction | **7.** Examine rotor brake (if installed) for condition and security. | | |

# PROGRESSIVE INSPECTIONS

## 5-17. 100-HOUR AIRFRAME PROGRESSIVE INSPECTION — EVENT NO. 2 (CONT)

| DATA REFERENCE | INSPECTION TASK DESCRIPTION | INITIAL MECH | INITIAL OTHER |
|---|---|---|---|
| Chapter 96 | **8.** Examine the primary electrical ground connection in engine pan area for condition and security | | |
| | **POWER PLANT** | | |
| Rolls-Royce 250-C30 Series Operation and Maintenance Manual, 14W2 | **1.** Perform engine inspection per the applicable Rolls-Royce Operation and Maintenance Manual. | | |
| Chapter 71 | **2.** Examine engine inlet bellmouth for obstruction and general condition. | | |
| | **3.** Examine engine compartment hardware for security of attachment. | | |
| | **4.** Examine engine for evidence of fuel or oil leaks. | | |
| | **5.** Examine all flexible and rigid lines for condition and security. | | |
| | **a.** Pay particular attention for chafing damage and kinked lines. | | |
| | **6.** Examine exhaust stack for condition and security. | | |
| | **7.** Examine all engine-mounted accessories for condition and security. | | |
| Chapter 75 | **8.** Examine the engine anti-ice solenoid valve for condition and security. | | |
| Chapter 76 | **9.** Inspect fuel control lever bolt hole and bolt for wear. Replace parts as required. | | |
| | **10.** Deleted | | |
| | **11.** Deleted. | | |
| Chapter 76 | **12.** Examine engine controls for condition and security. | | |
| | **13.** Verify operation of engine $N_1$ control as follows: | | |
| | **a.** Ensure proper throttle friction. | | |

# PROGRESSIVE INSPECTIONS

## 5-17. 100-HOUR AIRFRAME PROGRESSIVE INSPECTION — EVENT NO. 2 (CONT)

| DATA REFERENCE | INSPECTION TASK DESCRIPTION | INITIAL MECH | INITIAL OTHER |
|---|---|---|---|
| | **b.** Check freedom of full throttle grip travel and idle release operation. Return to closed position. Check copilot throttle if installed. | | |
| | **c.** Ensure fuel control stop lever contact with minimum and maximum stops before throttle grip reaches travel limit. | | |
| | **NOTE**<br>If dual controls are installed, it is permissible for pointer to be 0.078 inch (1.98 mm) below 40° mark when copilot twist grip is used. | | |
| | **d.** Rotate throttle grip to idle detent, fuel control pointer should be no more than 0.01 inch (0.25 mm) below the 40° mark on the quadrant. | | |
| | **e.** Verify control linkage for excessive looseness, lost motion, and binding. | | |
| | **14.** Verify operation of engine $N_2$ control as follows: | | |
| | **a.** Position $N_2$ governor actuator to full DECREASE (extended). | | |
| | **b.** Lift collective stick full up. | | |
| | **c.** Position $N_2$ governor actuator to full INCREASE (retracted). | | |
| | **d.** Verify for clearance between governor stop and lever stop arm. | | |
| | **e.** Lower collective stick full down. | | |
| | **f.** Position $N_2$ governor actuator to full DECREASE (extended). | | |
| | **g.** Verify for clearance between governor stop and lever stop arm. | | |
| Chapter 71 | **h.** Verify control linkage for excessive looseness, lost motion, and binding. | | |

# PROGRESSIVE INSPECTIONS

## 5-17. 100-HOUR AIRFRAME PROGRESSIVE INSPECTION — EVENT NO. 2 (CONT)

| DATA REFERENCE | INSPECTION TASK DESCRIPTION | INITIAL MECH | INITIAL OTHER |
|---|---|---|---|
| | **DRIVETRAIN** | | |
| Chapter 63 | **1.** Examine freewheel assembly for condition, leaks, and security. | | |
| Chapter 63<br>Chapter 96 | **2.** Examine the freewheel unit chip detector for accumulated material. Perform operational check of freewheel unit chip detector. (Refer to transmission chip detector caution system.) | | |
| Chapter 65 | **3.** Examine forward short shaft (steel) disc pack couplings for condition and security. | | |
| | **4.** Examine forward short shaft (steel) splined adapters for adequate lubrication and freedom of movement. | | |
| | **5.** Torque check forward short shaft disc pack coupling fasteners 150 to 180 inch-pounds (16.9 to 20.3 Nm). | | |
| Chapter 96 | **ELECTRICAL** | | |
| | **1.** Examine all electrical components, wires, cables, and connectors in the power plant area for chafing, general condition, and security. | | |
| | **2.** Verify illumination of airframe fuel filter caution light by depressing differential switch “press to test” button on filter head. | | |
| | **ZONE 5 — AFT TOP DECK** | | |
| | **PLACARDS AND MARKINGS** | | |
| Chapter 11 | **1.** Examine the placards, decals and markings. Ensure they are readable, correctly applied and in agreement with the applicable configuration of your helicopter. | | |
| | **AIRFRAME (AFT TOP DECK)** | | |
| Chapter 71 | **1.** Remove and examine aft fairing and attachment fasteners for condition and security. | | |
| | **2.** Examine fairing retainer for condition. | | |
| | **3.** Examine exterior of aft deck structure for condition. | | |

# PROGRESSIVE INSPECTIONS

## 5-17. 100-HOUR AIRFRAME PROGRESSIVE INSPECTION — EVENT NO. 2 (CONT)

| DATA REFERENCE | INSPECTION TASK DESCRIPTION | INITIAL MECH | INITIAL OTHER |
|---|---|---|---|
| | **OIL SYSTEM** | | |
| Chapter 79 | **1.** Examine oil cooler area for evidence of oil leaks. Examine oil cooler pan for cleanliness and make sure the drain is not blocked. | | |
| | **2.** Examine all flexible and rigid fluid lines for condition and security. | | |
| | **a.** Pay particular attention for chafing damage and kinked lines. | | |
| | **3.** Examine oil cooler core for obstructions and cleanliness. | | |
| Chapter 65 | **4.** Examine oil cooler blower and housing for cleanliness, condition and security. | | |
| Chapter 79 | **5.** Examine oil tank for leakage, condition and security. Check oil for contamination. | | |
| | **6.** Examine oil tank supports for condition and security. | | |
| Chapter 71 | **7.** Examine the oil cooler seals bonded inside the aft fairing for condition. | | |
| | **8.** Examine external scavenge oil filter system (STC) (if installed) for condition and security. | | |
| | **DRIVETRAIN** | | |
| Chapter 65 | **1.** Examine the blower impeller for condition. | | |
| | **2.** Examine oil cooler blower impeller shaft for condition. | | |
| | **3.** Examine oil cooler blower hanger bearings and brackets for grease leakage and evidence of overheating. | | |
| | **4.** Examine aft short shaft (aluminium) for condition and security. | | |
| | **5.** Examine aft short shaft (aluminium) splined adapter for adequate lubrication and freedom of movement. | | |

# PROGRESSIVE INSPECTIONS

## 5-17. 100-HOUR AIRFRAME PROGRESSIVE INSPECTION — EVENT NO. 2 (CONT)

| DATA REFERENCE | INSPECTION TASK DESCRIPTION | INITIAL MECH | INITIAL OTHER |
|---|---|---|---|
| | **6.** Torque check disc pack coupling fasteners 50 to 70 inch-pounds (5.7 to 7.9 Nm). | | |
| Chapter 96 | **ELECTRICAL** | | |
| | **1.** Examine all electrical components, wires, cables, and connectors in the area of the aft deck for chafing, and general condition and security. | | |
| | **GROUND RUN** | | |
| | **CAUTION**<br>GROUND RUN OF HELICOPTER TO BE ACCOMPLISHED BY QUALIFIED PERSONNEL ONLY. | | |
| Chapter 12 | **1.** Make sure applicable servicing requirements have been carried out. | | |
| | **2.** Check oil level of transmission, hydraulic tank, engine and rail rotor gearbox prior to running helicopter. | | |
| | **3.** Make sure that helicopter is ready for ground run and that surrounding area is clear. | | |
| BHT-206L4-FM-1 | **4.** Start the helicopter and conduct ground run at 100% $N_R$ to check for leaks and ensure all systems are operational and parameters are within Flight Manual limitations. | | |

# PROGRESSIVE INSPECTIONS

## 5-18. 100-HOUR AIRFRAME PROGRESSIVE INSPECTION — EVENT NO. 3

| DATA REFERENCE | INSPECTION TASK DESCRIPTION | INITIAL MECH | INITIAL OTHER |
|---|---|---|---|
| | **DATE:** _____ **W.O.** _____<br>**FACILITY:** _____<br>**HELICOPTER S/N:** _____<br>**REGISTRY NO.:** _____<br>**TOTAL TIME:** _____<br>**SIGNATURE:** _____ | | |
| | **ZONE 6 — TAILBOOM** | | |
| Chapter 11 | **PLACARDS AND MARKINGS** | | |
| | **1.** Examine the placards, decals and markings. Ensure they are readable, correctly applied and in agreement with the applicable configuration of your helicopter. | | |
| | **TAILBOOM STRUCTURE** | | |
| Chapter 53 | **1.** Remove and examine tail rotor driveshaft cover, and fasteners for condition and security. | | |
| | **2.** Remove and examine tail rotor gearbox fairings for condition. | | |
| | **3.** Examine anti-chafing adhesive tape (C-460) on tailboom for condition. Replace worn or damaged tape as required. | | |
| | **NOTE**<br>In the event that cracks are found, contact Bell Helicopter Textron, Product Support Engineering. | | |
| | **4.** Examine entire tailboom for the following conditions:<br>**a.** Dents. | | |

# PROGRESSIVE INSPECTIONS

## 5-18. 100-HOUR AIRFRAME PROGRESSIVE INSPECTION — EVENT NO. 3 (CONT)

| DATA REFERENCE | INSPECTION TASK DESCRIPTION | INITIAL MECH | INITIAL OTHER |
|---|---|---|---|
| | **NOTE**<br>Pay particular attention to the upper left side tailboom quadrant.<br><br>**b.** Cracks.<br><br>**c.** Deformation.<br><br>**NOTE**<br>Pay particular attention to the rivets attaching the tail rotor gearbox support to the tailboom.<br><br>**d.** Loose rivets. Replace as required.<br><br>**e.** Chafing.<br><br>**f.** Waviness.<br><br>**5.** Examine drive shaft cover clips for condition and security. Inspect all clip edges for integrity of sealant. Reseal as required.<br><br>**6.** As applicable to tailbooms modified in accordance with ASB 206L-99-115, inspect doubler around stabilizer of left side for integrity of sealant. Reseal as required.<br><br>**7.** Examine horizontal stabilizer for condition and security. Verify security of all attachment bolts.<br><br>**8.** Examine elevators for condition, security, and side play.<br><br>**9.** Examine auxiliary finlets for condition and security.<br><br>**10.** Examine vertical fin assembly for condition and security.<br><br>**11.** Inspect the vertical fin attachment support for condition and damage. Pay particular attention to the vertical fin attachment points.<br><br>**12.** Examine for open tailboom drains on lower tailboom skin and clear any obstructions.<br><br>**13.** Inspect antennas for damage and security. | | |
| BHT-206-SRM<br><br>Chapter 53 | | | |

# PROGRESSIVE INSPECTIONS

## 5-18. 100-HOUR AIRFRAME PROGRESSIVE INSPECTION — EVENT NO. 3 (CONT)

| DATA REFERENCE | INSPECTION TASK DESCRIPTION | INITIAL MECH | INITIAL OTHER |
|---|---|---|---|
| Chapter 32 | **14.** Examine tailskid for condition, security and signs of ground contact. | | |
| | **TAIL ROTOR DRIVESHAFTS** | | |
| Chapter 65 | **1.** Examine tail rotor driveshaft hanger bearings for excessive grease leakage and evidence of overheating. | | |
| | **2.** Examine segmented driveshafts and aft splined adapter for condition and security. Check aft splined adapter for adequate lubrication and freedom of movement. | | |
| | **3.** Torque check disc pack coupling fasteners 50 to 70 inch-pounds (5.7 to 7.9 Nm). | | |
| | **TAIL ROTOR GEARBOX** | | |
| Chapter 53 | **1.** Examine tail rotor gearbox support for condition and security. Pay particular attention for cracks at the gearbox attachment holes. | | |
| Chapter 65 | **2.** Examine tail rotor gearbox for oil leaks, condition and security. | | |
| | **3.** Examine gearbox oil for evidence of contamination. | | |
| | **4.** Examine tail rotor output shaft for condition. | | |
| Chapter 65 | **5.** Examine the tail rotor gearbox chip detector for accumulated material. | | |
| Chapter 96 | **6.** Perform operational check of the tail rotor gearbox chip detector. | | |
| Chapter 64 | **TAIL ROTOR PITCH CHANGE CONTROLS** | | |
| | **1.** Examine the tail rotor pitch control mechanism for freedom of travel throughout range and for condition and security. | | |
| | **2.** Examine the following tail rotor pitch change components: | | |
| | **a.** Boot for condition, security, and evidence of grease or oil leakage. | | |

# PROGRESSIVE INSPECTIONS

## 5-18. 100-HOUR AIRFRAME PROGRESSIVE INSPECTION — EVENT NO. 3 (CONT)

| DATA REFERENCE | INSPECTION TASK DESCRIPTION | INITIAL MECH | INITIAL OTHER |
|---|---|---|---|
| | **b.** Lower control mechanism rod for condition of bearings. | | |
| | **c.** Pitch links and spherical bearings for condition and security. | | |
| | **d.** Crosshead for condition and security. | | |
| | **e.** Knurled nut for condition and security and liner for excessive play. | | |
| Chapter 96 | **ELECTRICAL** | | |
| | **1.** Examine all visible electrical components, wires, cables, and connectors in the area of the tailboom for chafing, and general condition and security. | | |
| | **2.** Verify navigation lights and anti-collision light for operation, condition, and security. | | |
| Chapter 97 | **3.** Examine antennas for condition and security. | | |
| | **GROUND RUN** | | |
| | **CAUTION**<br>GROUND RUN OF HELICOPTER TO BE ACCOMPLISHED BY QUALIFIED PERSONNEL ONLY. | | |
| Chapter 12 | **1.** Make sure applicable servicing requirements have been carried out. | | |
| | **2.** Check oil level of transmission, hydraulic tank, engine and rail rotor gearbox prior to running helicopter. | | |
| | **3.** Make sure that helicopter is ready for ground run and that surrounding area is clear. | | |
| BHT-206L4-FM-1 | **4.** Start the helicopter and conduct ground run at 100% $N_R$ to check for leaks and ensure all systems are operational and parameters are within Flight Manual limitations. | | |

# PROGRESSIVE INSPECTIONS

## 5-19. 100-HOUR AIRFRAME PROGRESSIVE INSPECTION — EVENT NO. 4

| DATA REFERENCE | INSPECTION TASK DESCRIPTION | INITIAL MECH | INITIAL OTHER |
|---|---|---|---|
| | **DATE: _____ W.O. _____** | | |
| | **FACILITY: _____** | | |
| | **HELICOPTER S/N: _____** | | |
| | **REGISTRY NO.: _____** | | |
| | **TOTAL TIME: _____** | | |
| | **SIGNATURE: _____** | | |
| | **ZONE 7 — CABIN INTERIOR** | | |
| Chapter 11 | **PLACARDS AND MARKINGS** | | |
| | **1.** Examine the placards, decals and markings. Ensure they are readable, correctly applied and in agreement with the applicable configuration of your helicopter. | | |
| BHT-206L4-FM-1 | **INSTRUMENTS** | | |
| | **1.** Examine instruments and instrument panel for condition, security and for correct markings. | | |
| | **EQUIPMENT AND FURNISHINGS** | | |
| Chapter 53 | **1.** Examine the cabin floor for condition. | | |
| Chapter 25 | **2.** Examine the seat assemblies for condition and security. | | |
| IL GEN-05-103 | **3.** Examine passenger and crew restraints and webbing for condition and security. | | |
| | **4.** Verify operation of passenger and crew inertia reels and belt buckles. Pull promptly on each reel to confirm the proper activation of the reel locking mechanism. | | |
| | **5.** Examine the interior trim for condition and security. | | |
| Chapter 52 | **6.** Verify sliding windows for safety and smoothness of sliding. | | |

# PROGRESSIVE INSPECTIONS

## 5-19. 100-HOUR AIRFRAME PROGRESSIVE INSPECTION — EVENT NO. 4 (CONT)

| DATA REFERENCE | INSPECTION TASK DESCRIPTION | INITIAL MECH | INITIAL OTHER |
|---|---|---|---|
| Chapter 21 | **7.** Examine the ventilation system for condition and security. | | |
| | **8.** Verify nose vents for proper operation, absence of obstructions or debris, and open drains. | | |
| Chapter 95 | **9.** Verify for proper operation of the fuel valve switch guard. | | |
| Chapter 26 | **10.** Inspect cabin fire extinguisher for condition, security and proper charge. | | |
| Chapter 21 | **11.** Verify proper operation of ventilation inlet control cables. | | |
| | **12.** Examine first aid kit, replace missing or out of date items. | | |
| Chapter 67 | **CONTROLS** | | |
| | **1.** Examine the collective control stick for condition and security. Examine copilot collective control stick if installed. | | |
| | **2.** Examine the cyclic control stick for condition and security. Examine copilot cyclic control stick if installed. | | |
| | **3.** Examine the anti-torque control pedals for condition and security. Examine copilot anti-torque control pedals if installed. | | |
| Chapter 96 | **ELECTRICAL** | | |
| | **1.** Verify operation of cockpit map reading light. | | |
| | **2.** Verify operation of aft cabin reading lights (if installed). | | |
| | **CAUTION**<br>USE EXTREME CARE WHEN IN PROXIMITY OF PITOT TUBE WITH HEAT APPLIED, TOUCHING TUBE MAY RESULT IN SERIOUS BURNS. | | |
| | **3.** Verify operation of the pitot tube heating system. | | |
| | **4.** Verify operation of defog blowers. | | |

# PROGRESSIVE INSPECTIONS

## 5-19. 100-HOUR AIRFRAME PROGRESSIVE INSPECTION — EVENT NO. 4 (CONT)

| DATA REFERENCE | INSPECTION TASK DESCRIPTION | INITIAL MECH | INITIAL OTHER |
|---|---|---|---|
| | **5.** Verify operation of ENGINE OUT and LOW ROTOR RPM audio and mute switch (if installed). | | |
| | **6.** Verify illumination of all caution panel annunciator light segments by depressing test switch, or each individual light segment, as applicable. | | |
| | **7.** Verify instrument lighting and dimming capabilities. | | |
| | **ZONE 8 — FORWARD FUSELAGE** | | |
| | **PLACARDS AND MARKINGS** | | |
| Chapter 11 | **1.** Examine the placards, decals and markings. Ensure they are readable, correctly applied and in agreement with the applicable configuration of your helicopter. | | |
| | **FUSELAGE** | | |
| Chapter 53 | **1.** Examine forward fuselage for condition. | | |
| Chapter 52 | **2.** Examine all cabin doors for condition and security. Give special attention to the following | | |
| | **a.** Hinges | | |
| | **b.** Seals | | |
| | **c.** Latches for proper adjustment, positive locking, and wear | | |
| | **d.** Windows | | |
| | **e.** Handles | | |
| Chapter 95 | **3.** Drain moisture from pitot and static piping installation. | | |
| Chapter 53 | **4.** Examine the external power door and receptacle for condition and security. | | |
| | **5.** Examine battery compartment door, door seal and attachment for condition and security. | | |

# PROGRESSIVE INSPECTIONS

## 5-19. 100-HOUR AIRFRAME PROGRESSIVE INSPECTION — EVENT NO. 4 (CONT)

| DATA REFERENCE | INSPECTION TASK DESCRIPTION | INITIAL MECH | INITIAL OTHER |
|---|---|---|---|
| Chapter 52 | **6.** Examine components in battery compartment for condition and security. | | |
| Chapter 32 | **7.** Examine cabin entry steps (if installed) for condition and security. | | |
| Chapter 52 | **8.** Examine windshields and skylights for condition. | | |
| Chapter 53 | **9.** Examine upper fuselage for evidence of water leaks. | | |
| | **10.** Examine lower fuselage for indication of fuel leaks, dents, cracks, corrosion, delamination, loose or missing rivets, and condition. | | |
| | **11.** Examine all fuselage sealant joints for condition. Restore sealant as necessary. | | |
| Chapter 96 | **ELECTRICAL AND AVIONICS** | | |
| | **1.** Examine all visible electrical components, wires, cables, and connectors in the area of the forward fuselage for chafing, and general condition and security. | | |
| | **2.** Examine battery and vent tubes for condition and security. | | |
| | **3.** Perform operational test of the battery temperature indicating system. | | |
| | **4.** Verify operation of litter door open warning light. | | |
| | **5.** Verify operation of landing lights. | | |
| | **6.** Verify operation of lower fuselage mounted position lights (if installed). | | |
| Chapter 97 | **7.** Examine antennas for condition and security. | | |

# PROGRESSIVE INSPECTIONS

## 5-19. 100-HOUR AIRFRAME PROGRESSIVE INSPECTION — EVENT NO. 4 (CONT)

| DATA REFERENCE | INSPECTION TASK DESCRIPTION | INITIAL MECH | INITIAL OTHER |
|---|---|---|---|
| | **ZONE 9 — AFT FUSELAGE** | | |
| | **PLACARDS AND MARKINGS** | | |
| Chapter 11 | **1.** Examine the placards, decals and markings. Make sure they are readable, correctly applied and in agreement with the applicable configuration of your helicopter. | | |
| | **FUSELAGE (EXTERIOR)** | | |
| Chapter 53 | **1.** Examine aft fuselage for dents, cracks, corrosion, delamination, loose or missing rivets and condition. | | |
| | **2.** Examine aft fuselage for indications of fuel or oil leaks. | | |
| Chapter 28 | **3.** Examine the fuel cap for condition and security. | | |
| Chapter 96 | **4.** Examine the grounding plug for condition. | | |
| Chapter 6 and Chapter 53 | **5.** Examine all fuselage drains for condition and freedom from obstructions. | | |
| Applicable Service Instruction | **6.** Examine heater and/or air conditioning inlets and outlets for cleanliness and absence of obstructions, (if installed). | | |
| Chapter 53 | **7.** Examine baggage compartment door, seal, and latches for operation, condition, and security. | | |
| Chapter 96 | **8.** Verify operation of the baggage door ajar caution light, (if installed). | | |
| | **FUSELAGE (INTERIOR)** | | |
| Chapter 53 | **1.** Examine baggage compartment for condition. | | |
| | **2.** Gain access to inside of aft fuselage through access panels in baggage compartment and access panel located on the aft right hand fuselage: | | |
| | **a.** Examine access panels and fasteners for condition. | | |
| | **b.** Examine under engine pan for fuel, oil or water leaks. | | |

# PROGRESSIVE INSPECTIONS

## 5-19. 100-HOUR AIRFRAME PROGRESSIVE INSPECTION — EVENT NO. 4 (CONT)

| DATA REFERENCE | INSPECTION TASK DESCRIPTION | INITIAL MECH | INITIAL OTHER |
|---|---|---|---|
| | **c.** Examine drain lines for condition and security. | | |
| | **d.** Examine aft fuselage longerons for cracks, corrosion, and condition. Pay particular attention to the upper left longeron between aft fuselage frame at STA 204.49 and frame at STA 231.48. | | |
| | **e.** Examine interface between longerons and engine pan structure for cracks, corrosion, distortion and loose fasteners. | | |
| | **f.** Inspect engine mount attachment structure for condition. | | |
| | **CAUTION**<br>ANY CRACK, CORROSION, OR LOOSE OR SHEARED RIVET IS CAUSE FOR IMMEDIATE GROUNDING OF THE HELICOPTER UNTIL THE PROBLEM IS CORRECTED. | | |
| Chapter 53<br>Chapter 4 | **g.** Examine the four tailboom attachment fittings on fuselage aft bulkhead and tailboom forward bulkhead for cracks. Give special attention to the tailboom attachment fittings/ intercostals and bolts, and to fasteners between the intercostal. Particular attention must be given to inspection of the upper left fitting (refer to Chapter 4, Inspection Limitations Schedule), | | |
| | **CONTROLS** | | |
| Chapter 67 | **1.** Examine the anti-torque control system components for condition and security. | | |
| | **2.** Examine the stabilizer elevator control system components for condition and security. | | |
| Chapter 96 and Chapter 97 | **ELECTRICAL AND AVIONICS** | | |
| | **1.** Examine antennas for condition and security. | | |
| | **2.** Examine all components, electrical wiring, cables, and connectors for chafing, general condition, and security. | | |

# PROGRESSIVE INSPECTIONS

## 5-19. 100-HOUR AIRFRAME PROGRESSIVE INSPECTION — EVENT NO. 4 (CONT)

| DATA REFERENCE | INSPECTION TASK DESCRIPTION | INITIAL MECH | INITIAL OTHER |
|---|---|---|---|
| | **3.** Examine all optional equipment installed in the aft fuselage area for condition and security. | | |
| | **4.** Verify proper operation of fuel sump drain valve switch. | | |
| | **ZONE 10 — LANDING GEAR** | | |
| Chapter 11 | **PLACARDS AND MARKINGS** | | |
| | **1.** Examine the placards, decals and markings. Ensure they are readable, correctly applied and in agreement with the applicable configuration of your helicopter. | | |
| Chapter 32 | **CROSSTUBES** | | |
| | **1.** Examine crosstube retaining straps, cushions, and attaching hardware for condition and security. | | |
| | **2.** Examine fuselage attachment fittings for condition and security. | | |
| | **3.** Examine electrical bonding strips (if installed) for condition and security. | | |
| | **4.** Examine fairings (if installed) for condition and security. | | |
| | **5.** Examine crosstube riveted or clamped supports for condition and security. Give particular attention to the sealant joints around supports. Restore sealant (C-251) and paint finish as required. | | |
| | **6.** Examine crosstubes for corrosion and damage. Give particular attention to areas where equipment is mounted. Repair and/or restore surface protection as required. | | |
| | **7.** Examine cabin entry steps for condition and security (if installed). | | |
| | **8.** Examine sealant joint at junction with skid tube saddles. Restore sealant (C-251) and paint finish as required. | | |
| Chapter 32 | **SKID TUBES** | | |
| | **1.** Examine skid tubes for corrosion, damage, and security. | | |

# PROGRESSIVE INSPECTIONS

## 5-19. 100-HOUR AIRFRAME PROGRESSIVE INSPECTION — EVENT NO. 4 (CONT)

| DATA REFERENCE | INSPECTION TASK DESCRIPTION | INITIAL MECH | INITIAL OTHER |
|---|---|---|---|
| | **2.** Examine skid shoes for condition and security. | | |
| | **3.** Examine skid tube saddles for corrosion, damage, and security. | | |
| | **4.** Examine ground handling wheel attachment bolts for condition and security. | | |
| | **GROUND RUN** | | |
| | **CAUTION**<br>GROUND RUN OF HELICOPTER TO BE ACCOMPLISHED BY QUALIFIED PERSONNEL ONLY. | | |
| Chapter 12 | **1.** Make sure applicable servicing requirements have been carried out. | | |
| | **2.** Check oil level of transmission, hydraulic tank, engine and rail rotor gearbox prior to running helicopter. | | |
| | **3.** Make sure that helicopter is ready for ground run and that surrounding area is clear. | | |
| BHT-206L4-FM-1 | **4.** Start the helicopter and conduct ground run at 100% $N_R$ to check for leaks and ensure all systems are operational and parameters are within Flight Manual limitations. | | |
| Chapter 96 | **5.** Check the voltage regulator setting. | | |

# PERIODIC INSPECTION

## 5-20. 100-HOUR AIRFRAME PERIODIC INSPECTION

| DATA REFERENCE | INSPECTION TASK DESCRIPTION | INITIAL MUCH | INITIAL OTHER |
|---|---|---|---|
| Chapter 5 Paragraph 5-16 through paragraph 5-19 | **DATE:** _____ **W.O.** _____<br>**FACILITY:** _____<br>**HELICOPTER S/N:** _____<br>**REGISTRY NO.:** _____<br>**TOTAL TIME:** _____<br>**SIGNATURE:** _____<br><br>**1.** Do this inspection every 100 hours of operation or every 12 calendar months.<br><br>**2.** Do all four events of the 100-hour progressive inspection. | | |

# PROGRESSIVE INSPECTIONS

## 5-21. 300-HOUR AIRFRAME PROGRESSIVE INSPECTION — EVENT NO. 1

| DATA REFERENCE | INSPECTION TASK DESCRIPTION | INITIAL MECH | INITIAL OTHER |
|---|---|---|---|
| | **DATE: _____ W.O. _____** | | |
| | **FACILITY: _____** | | |
| | **HELICOPTER S/N: _____** | | |
| | **REGISTRY NO.: _____** | | |
| | **TOTAL TIME: _____** | | |
| | **SIGNATURE: _____** | | |
| | **ZONE 1 — MAIN ROTOR SYSTEM** | | |
| Chapter 11 | **PLACARDS AND MARKINGS** | | |
| | **1.** Examine the placards, decals and markings. Make sure they are readable, correctly applied and in agreement with the applicable configuration of your helicopter. | | |
| Chapter 62 | **MAIN ROTOR SYSTEM** | | |
| | **1.** Verify main rotor flap restraint for freedom of movement, and for condition and security. | | |
| | **2.** Examine static stops and mast for evidence of mast bumping. | | |
| | **3.** Remove main rotor blade leading edge erosion protection tape, if installed. | | |
| | **4.** Examine main rotor blades for cleanliness and overall condition. Examine for cracks, corrosion and de-bonding of doublers. | | |
| | **5.** Examine leading edge of blades for corrosion and erosion. Restore contour as necessary. | | |
| | **6.** Examine the tip weight cap for corrosion, cracks, erosion, and deformation. | | |

# PROGRESSIVE INSPECTIONS

## 5-21. 300-HOUR AIRFRAME PROGRESSIVE INSPECTION — EVENT NO. 1 (CONT)

| DATA REFERENCE | INSPECTION TASK DESCRIPTION | INITIAL MECH | INITIAL OTHER |
|---|---|---|---|
| BHT-206L-CR&O | **7.** If applicable, reinstall main rotor blade leading edge erosion protection tape.<br><br>**8.** Examine the following main rotor hub assembly components for condition and security:<br><br>**a.** Mast nut<br><br>**b.** Trunnion<br><br>**c.** Pillow blocks<br><br>**d.** Grips<br><br>**e.** Pitch horns<br><br>**f.** Static stops<br><br>**9.** Examine pitch horn trunnion bearings for evidence of wear, damage, and for security.<br><br>**10.** Examine main rotor yoke for corrosion or mechanical damage as follows:<br><br>**a.** Examine fillet radius of both yoke spindles inboard of wear sleeves for evidence of corrosion. If corrosion is visible, remove with fine abrasive pad (C-407). If corrosion cannot be removed with pads, or is extensive, disassemble hub for inspection and repair.<br><br>**NOTE**<br><br>If the main rotor hub must be disassembled, omit remaining steps.<br><br>**b.** Examine entire yoke centre section (inboard and outboard surfaces) for damage.<br><br>**c.** Touch up all repaired areas or areas of bare metal in accordance with applicable main rotor hub inspection and repair instructions. | | |

# PROGRESSIVE INSPECTIONS

## 5-21. 300-HOUR AIRFRAME PROGRESSIVE INSPECTION — EVENT NO. 1 (CONT)

| DATA REFERENCE | INSPECTION TASK DESCRIPTION | INITIAL MECH | INITIAL OTHER |
|---|---|---|---|
| | **d.** Ensure no sealant voids are visible around shields or wear sleeve, strap fittings, and grip closure. Recoat with sealant (C-308) as required. On main rotor hub assemblies up to and including P/N 206-011-100-025, coat the remaining exposed fillet radius and repaired surfaces with a film of corrosion preventive compound (C-101).<br><br>**PITCH LINK ASSEMBLY (206-010-360-005)**<br><br>**1.** Examine the condition of the torque seal (C-049) between the main rotor pitch link tube and the upper and lower inserts of both main rotor pitch link assemblies.<br><br>**a.** If the torque seal (C-049) is missing or damaged, carry out a detailed visual inspection (DVI) of the main rotor pitch link tube assembly for debonding of the insert where the torque seal (C-049) is missing or damaged. This can include, but not limited to, cracked paint, cracked sealant, and corrosion.<br><br>**(1)** Remove the torque seal (C-049) residue, and clean inserts and tube with a clean cloth (C-516) moistened with drycleaning solvent (C-304).<br><br>**(2)** If the insert is not debonded, again apply torque seal (C-049), or equivalent.<br><br>**2.** If an insert is found debonded, or is suspected to be, contact Product Support Engineering (PSE) at productsupport@bellflight.com for disposition. Provide the following information:<br><br>**i.** The serial number of the helicopter the suspect parts are found.<br><br>**ii.** The part number of the main rotor pitch link assembly.<br><br>**iii.** The serial number of the main rotor pitch link assembly.<br><br>**iv.** Total time since new of the main rotor pitch link assembly (if known). | | |

# PROGRESSIVE INSPECTIONS

## 5-21. 300-HOUR AIRFRAME PROGRESSIVE INSPECTION — EVENT NO. 1 (CONT)

| DATA REFERENCE | INSPECTION TASK DESCRIPTION | INITIAL MECH | INITIAL OTHER |
|---|---|---|---|
| | **v.** If it is the upper or lower insert (or both) that is found, or suspected to be, debonded. | | |
| | **vi.** Pictures of the debonded, or suspected to be, insert(s). | | |
| | **ZONE 2 — TAIL ROTOR ASSEMBLY** | | |
| Chapter 11 | **PLACARDS AND MARKINGS** | | |
| | **1.** Examine the placards, decals and markings. Make sure they are readable, correctly applied and in agreement with the applicable configuration of your helicopter. | | |
| Chapter 64 | **TAIL ROTOR ASSEMBLY** | | |
| | **1.** Clean tail rotor blades to maintain visibility of warning stripes. | | |
| BHT-206L-CR&O | **2.** Examine the following tail rotor hub assembly components for condition and security of attachment: | | |
| | **a.** Yoke | | |
| | **b.** Pitch horns | | |
| | **c.** Trunnion and trunnion caps | | |
| | **d.** Counterweight hardware | | |
| Chapter 64 | **3.** Examine tail rotor blades as follows: | | |
| | **a.** Tip block rivets for damage, corrosion, erosion, and looseness. | | |
| | **b.** Skin for bulges, nicks, dents, scratches, or other damage. | | |
| | **c.** Deformed or cracked skin in the area of the chordwise weights. | | |
| | **d.** Leading edge for erosion, nicks, dents or scratches. | | |

# PROGRESSIVE INSPECTIONS

## 5-21. 300-HOUR AIRFRAME PROGRESSIVE INSPECTION — EVENT NO. 1 (CONT)

| DATA REFERENCE | INSPECTION TASK DESCRIPTION | INITIAL MECH | INITIAL OTHER |
|---|---|---|---|
| | **e.** Bonded joints of blade skin mating area for suspected voids or cracks. Pay particular attention in the area of tip block and doublers.<br><br>**f.** Feathering bearings for looseness and cracks in uniball.<br><br>**4.** Examine the following tail rotor hub and blade assembly attaching components for condition and security:<br><br>**a.** Spacer<br><br>**b.** Rubber bumper<br><br>**c.** Static stop<br><br>**d.** Nut<br><br>**e.** Balance wheel<br><br>**5.** Check dynamic balance of tail rotor hub and blade assembly and adjust as required during ground run.<br><br>**GROUND RUN**<br><br>**CAUTION**<br><br>GROUND RUN OF HELICOPTER TO BE ACCOMPLISHED BY QUALIFIED PERSONNEL ONLY. | | |
| Chapter 12 | **1.** Make sure applicable servicing requirements have been carried out.<br><br>**2.** Check oil level of transmission, hydraulic tank, engine and rail rotor gearbox prior to running helicopter.<br><br>**3.** Make sure that helicopter is ready for ground run and that surrounding area is clear. | | |
| BHT-206L4-FM-1 | **4.** Start the helicopter and conduct ground run at 100% $N_R$ to check for leaks and ensure all systems are operational and parameters are within Flight Manual limitations. | | |

# PROGRESSIVE INSPECTIONS

## 5-22. 300-HOUR AIRFRAME PROGRESSIVE INSPECTION — EVENT NO. 2

| DATA REFERENCE | INSPECTION TASK DESCRIPTION | INITIAL MECH | INITIAL OTHER |
|---|---|---|---|
| | **DATE:** _____ **W.O.** _____ | | |
| | **FACILITY:** _____ | | |
| | **HELICOPTER S/N:** _____ | | |
| | **REGISTRY NO.:** _____ | | |
| | **TOTAL TIME:** _____ | | |
| | **SIGNATURE:** _____ | | |
| | **ZONE 3 — FORWARD DECK** | | |
| Chapter 11 | **PLACARDS AND MARKINGS** | | |
| | **1.** Examine the placards, decals and markings. Make sure they are readable, correctly applied and in agreement with the applicable configuration of your helicopter. | | |
| | **AIRFRAME (FORWARD DECK)** | | |
| Chapter 71 | **1.** Open and examine forward fairing for condition and security. | | |
| | **2.** Remove and examine transmission cowling for condition. | | |
| | **3.** Examine all fairing and cowling latches and/or fasteners for condition. | | |
| | **4.** Examine top deck for condition, leaks and security. | | |
| Chapter 53 | **5.** Clean transmission deck. | | |
| | **6.** Examine air indication cowling and plenum for damage, obstructions and cleanliness. Examine intake fairing windows for damage and cleanliness. | | |
| | **7.** Examine inlet screen (if applicable) for missing or damaged wires and rivets. | | |

# PROGRESSIVE INSPECTIONS

## 5-22. 300-HOUR AIRFRAME PROGRESSIVE INSPECTION — EVENT NO. 2 (CONT)

| DATA REFERENCE | INSPECTION TASK DESCRIPTION | INITIAL MECH | INITIAL OTHER |
|---|---|---|---|
| | **8.** Examine particle separator (if applicable) vortex tubes, ejector tubes, and ejector nozzles for cleanliness, condition, and security. | | |
| | **9.** Examine forward deck drain(s) to ensure absence of obstruction. | | |
| | **10.** Examine antennas for condition and security. | | |
| Chapter 67 | **CONTROLS** | | |
| | **1.** Examine the following flight control components for signs of interference, corrosion, wear, mechanical damage and security: | | |
| | **a.** Control tubes. | | |
| | **b.** Links. | | |
| | **c.** Rod and bearings. | | |
| | **d.** Bellcranks. | | |
| | **e.** Bellcrank supports. | | |
| | **f.** Attaching bolts and nuts. | | |
| | **2.** Inspect main rotor pitch links with a 3X magnifying glass for damage, corrosion and cracks. Give particular attention to swaged ends at jam nut or inserts. | | |
| Chapter 76 | **3.** Examine $N_2$ control linkages on forward deck for condition and security. Pay particular attention to the jackshaft assembly for damage or evidence or twisting. | | |
| | **4.** Verify all control tubes and bellcranks for freedom of travel throughout range. | | |
| Chapter 62 | **SWASHPLATE ASSEMBLY AND MAST** | | |
| | **1.** Clean swashplate assembly and mast. | | |
| | **2.** Disconnect main rotor pitch links from outer ring. | | |

# PROGRESSIVE INSPECTIONS

## 5-22. 300-HOUR AIRFRAME PROGRESSIVE INSPECTION — EVENT NO. 2 (CONT)

| DATA REFERENCE | INSPECTION TASK DESCRIPTION | INITIAL MECH | INITIAL OTHER |
|---|---|---|---|
| | **3.** Disconnect idler (drive) link from outer ring.<br><br>**4.** Examine swashplate drive assembly for axial, radial, and accumulative wear.<br><br>**5.** Disconnect boot from swashplate outer ring and lift up temporarily. Examine boot for evidence of deterioration.<br><br>**6.** Verify condition of duplex bearing, before lubrication, as follows:<br><br>**a.** Rotate outer ring to check duplex bearing for condition. Bearing must be smooth and show no evidence of roughness, binding, dragging, or looseness.<br><br>**7.** Examine pivot sleeve slot sidewalls for wear or deterioration.<br><br>**8.** Examine pivot sleeve bearings for wear, deterioration and evidence of excessive axial play between pivot sleeve and swashplate support.<br><br>**9.** Examine collar set bushings for cracks and damage.<br><br>**10.** Examine swashplate support and uniball surfaces for condition.<br><br>**11.** Examine collective lever to sleeve assembly pins and bushings for condition.<br><br>**12.** Examine inner ring for condition. Examine for evidence of contact with sleeve assembly.<br><br>**13.** Examine outer ring for condition.<br><br>**14.** Examine the upper inside diameter of swashplate support for evidence of contact with the mast pole.<br><br>**15.** Verify and adjust swashplate tilt friction as required.<br><br>**a.** Value must be between 15 to 32 pounds (67 to 142 N). If out of limits, adjust to 15 to 32 pounds (67 to 142 N) and check again. | | |

# PROGRESSIVE INSPECTIONS

## 5-22. 300-HOUR AIRFRAME PROGRESSIVE INSPECTION — EVENT NO. 2 (CONT)

| DATA REFERENCE | INSPECTION TASK DESCRIPTION | INITIAL MECH | INITIAL OTHER |
|---|---|---|---|
| | **16.** Connect and secure boot, idler (drive) link and main rotor pitch links to outer ring. | | |
| | **17.** Examine swashplate assembly for condition and security. | | |
| | **18.** Examine mast for condition. | | |
| Chapter 62 | **19.** Ensure no sealant voids are visible around the swashplate drive collar set. Re-coat with adhesive (C-307) as required. | | |
| Chapter 29 | **HYDRAULIC SYSTEM** | | |
| | **1.** Examine rigid and flexible fluid lines for chafing, leaks and security. | | |
| | **2.** Examine hydraulic pump for leaks and general condition. | | |
| | **3.** Examine hydraulic pump shaft splines, rotor tachometer splines, and oil pump splines for excessive wear. | | |
| Chapter 12 | **4.** Lubricate hydraulic pump shaft splines and rotor tachometer splines. | | |
| | **5.** Examine hydraulic reservoir for leaks and general condition. | | |
| | **6.** Examine servo actuators for leaks, condition and security. | | |
| | **7.** Examine servo actuator support for condition. | | |
| Chapter 67 | **8.** Verify linkage pivot bolts on hydraulic servo actuators for freedom of rotation and security. | | |
| | **9.** Examine hydraulic filter red indicator button (two locations). Button should not be extended. | | |
| Chapter 12 | **10.** Verify fluid level in hydraulic tank. Replenish as required. Replace fluid if color has changed color or if fluid emits bad odor. | | |
| | **11.** Examine manifold, relief valve, and solenoid valve for leaks, condition and security. | | |

# PROGRESSIVE INSPECTIONS

## 5-22. 300-HOUR AIRFRAME PROGRESSIVE INSPECTION — EVENT NO. 2 (CONT)

| DATA REFERENCE | INSPECTION TASK DESCRIPTION | INITIAL MECH | INITIAL OTHER |
|---|---|---|---|
| Chapter 63 | **TRANSMISSION AND PYLON ASSEMBLY**<br><br>**1.** Examine the following pylon support components:<br><br>**a.** Transmission link assemblies and bearings for damage and deterioration.<br><br>**b.** Nodal beam flexures for condition and security.<br><br>**c.** Forward and aft nodal beam deck supports for condition and security. Make sure of the torque of bolts only (bolts must not rotate). If a bolt is loose, remove the nut, install a new nut and torque 75 to 95 inch-pound (8.4 to 10.7 Nm).<br><br>**d.** Nodal beam stops for evidence of excessive contact with nodal beam arms.<br><br>**e.** Transmission restraint for damage and spherical bearings for excessive wear and security.<br><br>**f.** Stop mount for condition and security. Stop mount bushings for wear.<br><br>**g.** All pylon support elastomeric components for evidence of deterioration.<br><br>**h.** All pylon support hardware for security of attachment.<br><br>**2.** Examine transmission assembly for condition and security.<br><br>**3.** Examine transmission assembly for evidence of oil leakage.<br><br>**4.** Examine all fluid lines for chafing, damage and evidence of leakage.<br><br>**5.** Examine transmission oil for evidence of contamination.<br><br>**6.** Examine transmission oil filter bypass indicator for condition. Bypass button should not be extended.<br><br>**7.** Inspect all transmission chip detectors for accumulated material. | | |

# PROGRESSIVE INSPECTIONS

## 5-22. 300-HOUR AIRFRAME PROGRESSIVE INSPECTION — EVENT NO. 2 (CONT)

| DATA REFERENCE | INSPECTION TASK DESCRIPTION | INITIAL MECH | INITIAL OTHER |
|---|---|---|---|
| Chapter 96 | **8.** Do a functional test of all transmission chip detectors. | | |
| | **9.** Make sure no sealant voids are visible around forward and aft nodal beam deck mounted supports and isolation mount. Recoat with sealant (C-308) as required. | | |
| | **MAIN DRIVESHAFT** | | |
| Chapter 63 | **1.** Examine the engine to transmission driveshaft for condition and security. Examine the components as follows: | | |
| | **a.** Driveshaft for cracks, corrosion, and surface damage. | | |
| | **b.** Flexframe and bolts for condition and signs of slippage. | | |
| Chapter 96 | **ELECTRICAL** | | |
| | **1.** Examine all electrical components, wires, cables and connectors in the area of the forward deck and transmission for chafing, general condition, and security. | | |
| | **GROUND RUN** | | |
| | **CAUTION**<br>GROUND RUN OF HELICOPTER TO BE ACCOMPLISHED BY QUALIFIED PERSONNEL ONLY. | | |
| Chapter 12 | **1.** Make sure applicable servicing requirements have been carried out. | | |
| | **2.** Do a check of the oil level of transmission, hydraulic tank, engine and rail rotor gearbox prior to running helicopter. | | |
| | **3.** Make sure that helicopter is ready for ground run and that surrounding area is clear. | | |
| BHT-206L4-FM-1 | **4.** Start the helicopter and conduct ground run at 100% $N_R$, do a check for leaks and make sure all systems are operational and parameters are within Flight Manual limitations. | | |

# PROGRESSIVE INSPECTIONS

## 5-23. 300-HOUR AIRFRAME PROGRESSIVE INSPECTION — EVENT NO. 3

| DATA REFERENCE | INSPECTION TASK DESCRIPTION | INITIAL MECH | INITIAL OTHER |
|---|---|---|---|
| | **DATE: _____ W.O. _____** | | |
| | **FACILITY: _____** | | |
| | **HELICOPTER S/N: _____** | | |
| | **REGISTRY NO.: _____** | | |
| | **TOTAL TIME: _____** | | |
| | **SIGNATURE: _____** | | |
| | **ZONE 4 — POWER PLANT** | | |
| Chapter 11 | **PLACARDS AND MARKINGS** | | |
| | **1.** Examine the placards, decals and markings. Ensure they are readable, correctly applied and in agreement with the applicable configuration of your helicopter. | | |
| | **AIRFRAME (POWER PLANT AREA)** | | |
| Chapter 71 | **1.** Examine firewalls for condition and security. | | |
| Chapter 53 | **2.** Examine engine cowlings and doors for condition and security. Using a bright light and mirror, inspect exposed upper and lower edges of the joints between aluminium longerons and titanium engine pan. Edge of sealant coating should be visible. No indications of corrosion or cracks are acceptable. | | |
| | **3.** Examine engine pan area for evidence of loose fasteners and damage. Restore cracked or missing sealant form engine pan. | | |
| | **4.** Examine engine pan drains. Make sure that they are not clogged. | | |
| Chapter 28 | **5.** Examine airframe fuel filter assembly for evidence of leakage and security. | | |

# PROGRESSIVE INSPECTIONS

## 5-23. 300-HOUR AIRFRAME PROGRESSIVE INSPECTION — EVENT NO. 3 (CONT)

| DATA REFERENCE | INSPECTION TASK DESCRIPTION | INITIAL MECH | INITIAL OTHER |
|---|---|---|---|
| Chapter 71 | **6.** Examine engine mount legs for condition and security. Pay particular attention for loose fasteners. | | |
| | **7.** Examine engine mount fittings for condition and security. | | |
| Applicable Service Instruction | **8.** Examine rotor brake (if installed) for condition and security. | | |
| Chapter 96 | **9.** Examine the primary electrical ground connection in engine pan area for condition and security | | |
| | **POWER PLANT** | | |
| Rolls-Royce 250-C30 Series Operation and Maintenance Manual, 14W2 | **1.** Perform engine inspection per the applicable Rolls-Royce Operation and Maintenance Manual. | | |
| Chapter 71 | **2.** Examine engine inlet bellmouth for obstruction and general condition. | | |
| | **3.** Examine engine compartment hardware for security of attachment. | | |
| | **4.** Examine engine for evidence of fuel or oil leaks. | | |
| | **5.** Examine all flexible and rigid lines for condition and security. | | |
| | **a.** Pay particular attention for chafing damage and kinked lines. | | |
| | **6.** Examine exhaust stack for condition and security. | | |
| | **7.** Examine all engine-mounted accessories for condition and security. | | |
| Chapter 75 | **8.** Examine the engine anti-ice solenoid valve for condition and security. | | |
| Chapter 76 | **9.** Inspect fuel control lever bolt hole and bolt for wear. Replace parts as required. | | |
| | **10.** Deleted. | | |

# PROGRESSIVE INSPECTIONS

## 5-23. 300-HOUR AIRFRAME PROGRESSIVE INSPECTION — EVENT NO. 3 (CONT)

| DATA REFERENCE | INSPECTION TASK DESCRIPTION | INITIAL MECH | INITIAL OTHER |
|---|---|---|---|
| | **11.** Deleted. | | |
| Chapter 95 | **12.** Perform operational check of turbine outlet temperature system. | | |
| Chapter 76 | **13.** Examine engine controls for condition and security. | | |
| | **14.** Verify operation of engine $N_1$ control as follows: | | |
| | **a.** Ensure proper throttle friction. | | |
| | **b.** Check freedom of full throttle grip travel and idle release operation. Return to closed position. Check copilot throttle if installed. | | |
| | **c.** Ensure fuel control stop lever contact with minimum and maximum stops before throttle grip reaches travel limit. | | |
| | **NOTE**<br>If dual controls are installed, it is permissible for pointer to be 0.078 inch (1.98 mm) below 40° mark when copilot twist grip is used. | | |
| | **d.** Rotate throttle grip to idle detent, fuel control pointer should be no more than 0.01 inch (0.25 mm) below the 40° mark on the quadrant. | | |
| | **e.** Verify control linkage for excessive looseness, lost motion, and binding. | | |
| | **15.** Verify operation of engine $N_2$ control as follows: | | |
| | **a.** Position $N_2$ governor actuator to full DECREASE (extended). | | |
| | **b.** Lift collective stick full up. | | |
| | **c.** Position $N_2$ governor actuator to full INCREASE (retracted). | | |
| | **d.** Verify for clearance between governor stop and lever stop arm. | | |

# PROGRESSIVE INSPECTIONS

## 5-23. 300-HOUR AIRFRAME PROGRESSIVE INSPECTION — EVENT NO. 3 (CONT)

| DATA REFERENCE | INSPECTION TASK DESCRIPTION | INITIAL MECH | INITIAL OTHER |
|---|---|---|---|
| | **e.** Lower collective stick full down. | | |
| | **f.** Position $N_2$ governor actuator to full DECREASE (extended). | | |
| | **g.** Verify for clearance between governor stop and lever stop arm. | | |
| Chapter 71 | **h.** Verify control linkage for excessive looseness, lost motion, and binding. | | |
| Chapter 71<br>Chapter 12 | **16.** Examine $N_1$ and $N_2$ tachometer generator shaft splines and gearbox adapter splines for condition. Clean and lubricate shaft splines. | | |
| | **FUEL SYSTEM** | | |
| Chapter 28 | **1.** Inspect airframe fuel filter head as follows: | | |
| | **NOTE**<br>The following step does not apply to helicopters equipped with fuel filter assembly 222-366-621-103. | | |
| | **a.** Remove outlet port fitting from filter head. | | |
| | **b.** Pass a 0.020 inch (0.50 mm) wire through the bleed hole in outlet port side of filter head to ensure hole is not obstructed. | | |
| | **2.** Replace airframe fuel filter element. | | |
| Chapter 28 | **3.** Purge airframe and engine fuel system as follows: | | |
| | **a.** Turn both fuel boost pumps ON. | | |
| | **b.** Depress airframe fuel filter bypass valve “press to test” button on fuel filter head until there is no evidence of air coming out the lower fuel filter drain port and out of the fuel filter outlet supply line. | | |

# PROGRESSIVE INSPECTIONS

## 5-23. 300-HOUR AIRFRAME PROGRESSIVE INSPECTION — EVENT NO. 3 (CONT)

| DATA REFERENCE | INSPECTION TASK DESCRIPTION | INITIAL MECH | INITIAL OTHER |
|---|---|---|---|
| Rolls-Royce 250-C30 Series Operation and Maintenance Manual, 14W2 | **c.** Then proceed with Rolls-Royce engine fuel system purging procedure. | | |
| | **4.** Ensure air is purged from fuel filter head and check for fuel leaks during ground run. | | |
| | **STARTER GENERATOR** | | |
| Chapter 71 | **1.** Remove starter generator. Examine mounting pad and clamp for condition. | | |
| Chapter 96 | **2.** Examine commutator for wear. Replace starter generator if not smooth and bright or if showing excessive wear. | | |
| | **3.** Inspect brushes for wear. | | |
| Chapter 71 | **4.** Examine cooling duct and retention clamp for condition and security. | | |
| | **5.** Examine the splines on starter generator shaft and engine gear shaft. | | |
| | **DRIVETRAIN** | | |
| Chapter 63 | **1.** Examine freewheel assembly for condition leaks and security. | | |
| Chapter 63<br>Chapter 96 | **2.** Examine the freewheel unit chip detector for accumulated material. Perform operational check of freewheel unit chip detector. (Refer to transmission chip detector caution system.) | | |
| Chapter 65 | **3.** Examine forward short shaft (steel) disc pack couplings for condition and security. | | |
| | **4.** Examine forward short shaft (steel) splined adapters for wear. | | |
| Chapter 12 | **5.** Lubricate forward short shaft (steel) splined adapters. | | |
| Chapter 65 | **6.** Torque check forward short shaft disc pack coupling fasteners 150 to 180 inch-pounds (16.9 to 20.3 Nm). | | |

# PROGRESSIVE INSPECTIONS

## 5-23. 300-HOUR AIRFRAME PROGRESSIVE INSPECTION — EVENT NO. 3 (CONT)

| DATA REFERENCE | INSPECTION TASK DESCRIPTION | INITIAL MECH | INITIAL OTHER |
|---|---|---|---|
| Chapter 96 | **ELECTRICAL**<br><br>**1.** Examine all electrical components, wires, cables, and connectors in the power plant area for chafing, general condition, and security.<br><br>**2.** Verify illumination of airframe fuel filter caution light by depressing differential switch “press to test” button on filter head.<br><br>**GROUND RUN**<br><br>**CAUTION**<br><br>GROUND RUN OF HELICOPTER TO BE ACCOMPLISHED BY QUALIFIED PERSONNEL ONLY. | | |
| Chapter 12 | **1.** Make sure applicable servicing requirements have been carried out.<br><br>**2.** Check oil level of transmission, hydraulic tank, engine and rail rotor gearbox prior to running helicopter.<br><br>**3.** Make sure that helicopter is ready for ground run and that surrounding area is clear. | | |
| BHT-206L4-FM-1 | **4.** Start the helicopter and conduct ground run at 100% $N_R$ for a minimum of 2 minutes to check for leaks and ensure all systems are operational and parameters are within Flight Manual limitations. | | |

# PROGRESSIVE INSPECTIONS

## 5-24. 300-HOUR AIRFRAME PROGRESSIVE INSPECTION — EVENT NO. 4

| DATA REFERENCE | INSPECTION TASK DESCRIPTION | INITIAL MECH | INITIAL OTHER |
|---|---|---|---|
| | **DATE: _____ W.O. _____** | | |
| | **FACILITY: _____** | | |
| | **HELICOPTER S/N: _____** | | |
| | **REGISTRY NO.: _____** | | |
| | **TOTAL TIME: _____** | | |
| | **SIGNATURE: _____** | | |
| | **ZONE 5 — AFT TOP DECK** | | |
| | **PLACARDS AND MARKINGS** | | |
| Chapter 11 | **1.** Examine the placards, decals and markings. Ensure they are readable, correctly applied and in agreement with the applicable configuration of your helicopter. | | |
| | **AIRFRAME (AFT TOP DECK)** | | |
| Chapter 71 | **1.** Remove and examine aft fairing and attachment fasteners for condition and security. | | |
| | **2.** Examine fairing retainer for condition. | | |
| | **3.** Examine exterior of aft deck structure for condition. | | |
| | **OIL SYSTEM** | | |
| Chapter 79 | **1.** Examine oil cooler area for evidence of oil leaks. Examine oil cooler pan for cleanliness and make sure the drain is not blocked. | | |
| | **2.** Examine all flexible and rigid fluid lines for condition and security. | | |
| | **a.** Pay particular attention for chafing damage and kinked lines. | | |

# PROGRESSIVE INSPECTIONS

## 5-24. 300-HOUR AIRFRAME PROGRESSIVE INSPECTION — EVENT NO. 4 (CONT)

| DATA REFERENCE | INSPECTION TASK DESCRIPTION | INITIAL MECH | INITIAL OTHER |
|---|---|---|---|
| | **3.** Examine oil cooler core for obstructions and cleanliness. | | |
| Chapter 65 | **4.** Examine oil cooler blower and housing for cleanliness, condition and security. | | |
| Chapter 79 | **5.** Examine oil tank for leakage, condition and security. Check oil for contamination. | | |
| | **6.** Examine oil tank supports for condition and security. | | |
| Chapter 71 | **7.** Examine the oil cooler seals bonded inside the aft fairing for condition. | | |
| | **8.** Examine external scavenge oil filter system (STC) (if installed) for condition and security. | | |
| | **DRIVETRAIN** | | |
| Chapter 65 | **1.** Examine the blower impeller for condition. | | |
| BHT-ALL-SPM, Chapter 6 | **2.** Using dye penetrant methods, inspect oil cooler blower impeller 206-061-432-031 for cracks. Give particular attention to the mounting flange where individual blades attach. | | |
| | **3.** Examine oil cooler blower impeller shaft for condition. | | |
| | **4.** Examine oil cooler blower hanger bearings and brackets for grease leakage and evidence of overheating. | | |
| | **5.** Lubricate oil cooler blower hanger bearings. | | |
| Chapter 12 Chapter 65 | **6.** Examine aft short shaft (aluminium) for condition and security. | | |
| | **7.** Examine aft short shaft (aluminium) splined adapter for wear. | | |
| Chapter 12 | **8.** Lubricate aft short shaft (aluminum) splined adapter. | | |
| Chapter 65 | **9.** Torque check disc pack coupling fasteners 50 to 70 inch-pounds (5.7 to 7.9 Nm). | | |

# PROGRESSIVE INSPECTIONS

## 5-24. 300-HOUR AIRFRAME PROGRESSIVE INSPECTION — EVENT NO. 4 (CONT)

| DATA REFERENCE | INSPECTION TASK DESCRIPTION | INITIAL MECH | INITIAL OTHER |
|---|---|---|---|
| Chapter 96 | **ELECTRICAL**<br><br>**1.** Examine all electrical components, wires, cables, and connectors in the area of the aft deck for chafing, and general condition and security. | | |
| | **ZONE 6 — TAILBOOM** | | |
| Chapter 11 | **PLACARDS AND MARKINGS**<br><br>**1.** Examine the placards, decals and markings. Ensure they are readable, correctly applied and in agreement with the applicable configuration of your helicopter. | | |
| | **TAILBOOM STRUCTURE** | | |
| Chapter 53 | **1.** Remove and examine tail rotor driveshaft cover, and fasteners for condition and security.<br><br>**2.** Remove and examine tail rotor gearbox fairings for condition.<br><br>**3.** Examine anti-chafing adhesive tape (C-460) on tailboom for condition. Replace worn or damaged tape as required.<br><br>**NOTE**<br>In the event that cracks are found, contact Bell Helicopter Textron, Product Support Engineering.<br><br>**4.** Examine entire tailboom for the following conditions:<br><br>**a.** Dents.<br><br>**NOTE**<br>Pay particular attention to the upper left side tailboom quadrant.<br><br>**b.** Cracks.<br><br>**c.** Deformation. | | |

# PROGRESSIVE INSPECTIONS

## 5-24. 300-HOUR AIRFRAME PROGRESSIVE INSPECTION — EVENT NO. 4 (CONT)

| DATA REFERENCE | INSPECTION TASK DESCRIPTION | INITIAL MECH | INITIAL OTHER |
|---|---|---|---|
| | **NOTE**<br>Pay particular attention to the rivets attaching the tail rotor gearbox support to the tailboom. | | |
| BHT-206-SRM | **d.** Loose rivets. Replace as required. | | |
| Chapter 53 | **e.** Chafing. | | |
| | **f.** Waviness. | | |
| | **5.** Examine drive shaft cover clips for condition and security. Inspect all clip edges for integrity of sealant. Reseal as required. | | |
| | **6.** As applicable to tailbooms modified in accordance with ASB 206L-99-115, inspect doubler around stabilizer of left side for integrity of sealant. Reseal as required. | | |
| | **7.** Examine horizontal stabilizer for condition and security. Verify security of all attachment bolts. | | |
| | **8.** Examine elevators for condition, security, and side play. | | |
| | **9.** Examine auxiliary finlets for condition and security. | | |
| | **10.** Examine vertical fin assembly for condition and security. | | |
| | **11.** Inspect the vertical fin attachment support for condition and damage. Pay particular attention to the vertical fin attachment points. | | |
| | **12.** Examine for open tailboom drains on lower tailboom skin and clear any obstructions. | | |
| | **13.** Inspect antennas for damage and security. | | |
| Chapter 32 | **14.** Examine tailskid for condition, security and signs of ground contact. | | |
| | **TAIL ROTOR DRIVESHAFTS** | | |
| Chapter 65 | **1.** Examine tail rotor driveshaft hanger bearings for excessive grease leakage and evidence of overheating. | | |

# PROGRESSIVE INSPECTIONS

## 5-24. 300-HOUR AIRFRAME PROGRESSIVE INSPECTION — EVENT NO. 4 (CONT)

| DATA REFERENCE | INSPECTION TASK DESCRIPTION | INITIAL MECH | INITIAL OTHER |
|---|---|---|---|
| Chapter 12 | **2.** Lubricate tail rotor driveshaft hanger bearings. | | |
| | **3.** Examine and lubricate the aft tail rotor driveshaft splined adapter. | | |
| Chapter 65 | **4.** Examine segmented driveshafts and aft splined adapter for condition and security. Check splined adapters for adequate lubrication and freedom of movement. | | |
| | **5.** Torque check disc pack coupling fasteners 50 to 70 inch-pounds (5.7 to 7.9 Nm). | | |
| | **TAIL ROTOR GEARBOX** | | |
| Chapter 53 | **1.** Examine tail rotor gearbox support for condition and security. Pay particular attention for cracks at the gearbox attachment holes. | | |
| Chapter 65 | **2.** Examine tail rotor gearbox for oil leaks, condition and security. | | |
| | **3.** Examine gearbox oil for evidence of contamination. | | |
| | **4.** Examine tail rotor output shaft for condition. | | |
| | **5.** Torque check tail rotor gearbox retaining nuts 50 to 70 inch-pounds (5.6 to 7.9 Nm). | | |
| | **6.** Examine the tail rotor gearbox chip detector for accumulated material. | | |
| Chapter 96 | **7.** Perform operational check of the tail rotor gearbox chip detector. | | |
| Chapter 64 | **TAIL ROTOR PITCH CHANGE CONTROLS** | | |
| | **1.** Examine the tail rotor pitch control mechanism for freedom of travel throughout range and for condition and security. | | |
| | **2.** Examine the following tail rotor pitch change components: | | |
| | **a.** Boot for condition, security, and evidence of grease or oil leakage. | | |

# PROGRESSIVE INSPECTIONS

## 5-24. 300-HOUR AIRFRAME PROGRESSIVE INSPECTION — EVENT NO. 4 (CONT)

| DATA REFERENCE | INSPECTION TASK DESCRIPTION | INITIAL MECH | INITIAL OTHER |
|---|---|---|---|
| | **b.** Lower control mechanism rod for condition of bearings. | | |
| | **c.** Pitch links and spherical bearings for condition and security. | | |
| | **d.** Crosshead for condition and security. | | |
| | **e.** Knurled nut for condition and security and liner for excessive play. | | |
| Chapter 96 | **ELECTRICAL** | | |
| | **1.** Examine all visible electrical components, wires, cables, and connectors in the area of the tailboom for chafing, and general condition and security. | | |
| | **2.** Verify navigation lights and anti-collision light for operation, condition, and security. | | |
| Chapter 97 | **3.** Examine antennas for condition and security. | | |
| | **GROUND RUN** | | |
| | **CAUTION**<br>GROUND RUN OF HELICOPTER TO BE ACCOMPLISHED BY QUALIFIED PERSONNEL ONLY. | | |
| Chapter 12 | **1.** Make sure applicable servicing requirements have been carried out. | | |
| | **2.** Check oil level of transmission, hydraulic tank, engine and rail rotor gearbox prior to running helicopter. | | |
| | **3.** Make sure that helicopter is ready for ground run and that surrounding area is clear. | | |
| BHT-206L4-FM-1 | **4.** Start the helicopter and conduct ground run at 100% $N_R$ to check for leaks and ensure all systems are operational and parameters are within Flight Manual limitations. | | |

# PROGRESSIVE INSPECTIONS

## 5-25. 300-HOUR AIRFRAME PROGRESSIVE INSPECTION — EVENT NO. 5

| DATA REFERENCE | INSPECTION TASK DESCRIPTION | INITIAL MECH | INITIAL OTHER |
|---|---|---|---|
| | **DATE: _____ W.O. _____** | | |
| | **FACILITY: _____** | | |
| | **HELICOPTER S/N: _____** | | |
| | **REGISTRY NO.: _____** | | |
| | **TOTAL TIME: _____** | | |
| | **SIGNATURE: _____** | | |
| | **ZONE 7 — CABIN INTERIOR** | | |
| Chapter 11 | **PLACARDS AND MARKINGS** | | |
| | **1.** Examine the placards, decals and markings. Ensure they are readable, correctly applied and in agreement with the applicable configuration of your helicopter. | | |
| BHT-206L4-FM-1 | **INSTRUMENTS** | | |
| | **1.** Examine instruments and instrument panel for condition, security and for correct markings. | | |
| | **AIRFRAME** | | |
| Chapter 25 | **1.** Remove cabin overhead upholstery, hat bin, soundproofing blanket, aft vertical tunnel covers, and roll-over bulkhead access panels. | | |
| Chapter 53 | **2.** Remove roof beam access panels. | | |
| Chapter 67 | **3.** Examine flight control tubes inside roof beam for condition and security. | | |
| Chapter 53 | **4.** Examine roof beam and roof shell structure for condition. | | |
| | **5.** Examine aft passenger seat bulkhead for distortion and/or cracks and indication of screw contact in the area of hat bin attachment nutplates. | | |

# PROGRESSIVE INSPECTIONS

## 5-25. 300-HOUR AIRFRAME PROGRESSIVE INSPECTION — EVENT NO. 5 (CONT)

| DATA REFERENCE | INSPECTION TASK DESCRIPTION | INITIAL MECH | INITIAL OTHER |
|---|---|---|---|
| Chapter 96 | **6.** Examine electrical components behind hat bin for condition, security, and cleanliness. | | |
| Chapter 53 | **7.** Examine engine and transmission support structure for cracks, corrosion, or loose fasteners. | | |
| | **CAUTION**<br>EXERCISE CARE AND USE ADEQUATE SCREW LENGTH WHEN REINSTALLING VERTICAL TUNNEL COVER TO AVOID CONTACT WITH TAIL ROTOR CONTROL TUBE. | | |
| | **8.** In the vertical tunnel area, examine the following: | | |
| Chapter 67 | **a.** Flight control system tubes for evidence of chafing with oil line or flex cable. | | |
| | **b.** Flight control system bellcranks, levers, supports, and walking beams for binding, excessive looseness, and security of attachment. | | |
| Chapter 95 | **c.** Oil lines for leakage, condition, and security. | | |
| Chapter 53 | **d.** Roof beam interface with vertical tunnel for cracks, corrosion, and loose fasteners. | | |
| | **e.** Vertical tunnel stiffening angles at roof beam interface for cracks, condition, and loose fasteners. | | |
| Chapter 25 and Chapter 53 | **9.** Remove crew seat cushions and panels and examine the following: | | |
| Chapter 67 and Chapter 76 | **a.** Control tubes, $N_1$ throttle cable, bellcranks, levers, yokes, and supports for bending, excessive looseness, and security of attachment. | | |
| Applicable Service Instruction | **b.** Heater ducts (if installed) for chafing with controls. | | |
| Chapter 95 | **c.** Oil lines for leakage and general condition. | | |

# PROGRESSIVE INSPECTIONS

## 5-25. 300-HOUR AIRFRAME PROGRESSIVE INSPECTION — EVENT NO. 5 (CONT)

| DATA REFERENCE | INSPECTION TASK DESCRIPTION | INITIAL MECH | INITIAL OTHER |
|---|---|---|---|
| Chapter 96 | **d.** Wiring and electrical components for condition and security. | | |
| Chapter 53 | **e.** Structure for corrosion, cracks, and condition. | | |
| | **EQUIPMENT AND FURNISHINGS** | | |
| Chapter 53 | **1.** Examine the cabin floor for condition. | | |
| Chapter 25 | **2.** Examine the seat assemblies for condition and security. | | |
| IL GEN-05-103 | **3.** Examine passenger and crew restraints and webbing for condition and security. | | |
| | **4.** Verify operation of passenger and crew inertia reels and belt buckles. Pull promptly on each reel to confirm the proper activation of the reel locking mechanism. | | |
| | **5.** Examine the interior trim for condition and security. | | |
| Chapter 52 | **6.** Verify sliding windows for safety and smoothness of sliding. | | |
| Chapter 21 | **7.** Examine the ventilation system for condition and security. | | |
| | **8.** Verify nose vents for proper operation, absence of obstructions or debris, and open drains. | | |
| Chapter 95 | **9.** Verify for proper operation of the fuel valve switch guard. | | |
| Chapter 26 | **10.** Inspect cabin fire extinguisher for condition, security and proper charge. | | |
| Chapter 21 | **11.** Verify proper operation of ventilation inlet control cables. | | |
| | **12.** Examine first aid kit, replace missing or out of date items. | | |
| Chapter 67 | **CONTROLS** | | |
| | **1.** Examine the collective control stick for condition and security and minimum friction. Examine copilot collective control stick if installed. | | |

# PROGRESSIVE INSPECTIONS

## 5-25. 300-HOUR AIRFRAME PROGRESSIVE INSPECTION — EVENT NO. 5 (CONT)

| DATA REFERENCE | INSPECTION TASK DESCRIPTION | INITIAL MECH | INITIAL OTHER |
|---|---|---|---|
| | **2.** Examine the cyclic control stick for condition and security and minimum friction. Examine copilot cyclic control stick if installed.<br><br>**3.** Examine the anti-torque control pedals for condition and security and minimum friction. Examine copilot anti-torque control pedals if installed. | | |
| Chapter 96 | **ELECTRICAL**<br><br>**1.** Verify operation of cockpit map reading light.<br><br>**2.** Verify operation of aft cabin reading lights (if installed).<br><br>**CAUTION**<br><br>USE EXTREME CARE WHEN IN PROXIMITY OF PITOT TUBE WITH HEAT APPLIED, TOUCHING TUBE MAY RESULT IN SERIOUS BURNS.<br><br>**3.** Verify operation of the pitot tube heating system.<br><br>**4.** Verify operation of defog blowers.<br><br>**5.** Verify operation of ENGINE OUT and LOW ROTOR RPM audio and mute switch (if installed).<br><br>**6.** Verify illumination of all caution panel annunciator light segments by depressing test switch, or each individual light segment, as applicable.<br><br>**7.** Verify instrument lighting and dimming capabilities. | | |
| | **ZONE 8 — FORWARD FUSELAGE** | | |
| Chapter 11 | **PLACARDS AND MARKINGS**<br><br>**1.** Examine the placards, decals and markings. Ensure they are readable, correctly applied and in agreement with the applicable configuration of your helicopter. | | |

# PROGRESSIVE INSPECTIONS

## 5-25. 300-HOUR AIRFRAME PROGRESSIVE INSPECTION — EVENT NO. 5 (CONT)

| DATA REFERENCE | INSPECTION TASK DESCRIPTION | INITIAL MECH | INITIAL OTHER |
|---|---|---|---|
| | **FUSELAGE** | | |
| Chapter 53 | **1.** Examine forward fuselage for condition. | | |
| Chapter 52 | **2.** Examine all cabin doors for condition and security. Give special attention to the following<br><br>**a.** Hinges<br><br>**b.** Seals<br><br>**c.** Latches for proper adjustment, positive locking, and wear<br><br>**d.** Windows<br><br>**e.** Handles | | |
| Chapter 95 | **3.** Drain moisture from pitot and static piping installation. | | |
| Chapter 53 | **4.** Examine the external power door and receptacle for condition and security. | | |
| | **5.** Examine battery compartment door, door seal and attachment for condition and security. | | |
| Chapter 52 | **6.** Examine components in battery compartment for condition and security. | | |
| Chapter 32 | **7.** Examine cabin entry steps (if installed) for condition and security. | | |
| Chapter 52 | **8.** Examine windshields and skylights for condition. | | |
| Chapter 53 | **9.** Examine upper fuselage for evidence of water leaks. | | |
| | **10.** Examine lower fuselage for indication of fuel leaks, dents, cracks, corrosion, delamination, loose or missing rivets, and condition. | | |
| | **11.** Examine all fuselage sealant joints for condition. Restore sealant as necessary. | | |

# PROGRESSIVE INSPECTIONS

## 5-25. 300-HOUR AIRFRAME PROGRESSIVE INSPECTION — EVENT NO. 5 (CONT)

| DATA REFERENCE | INSPECTION TASK DESCRIPTION | INITIAL MECH | INITIAL OTHER |
|---|---|---|---|
| Chapter 96 and Chapter 97 | **ELECTRICAL AND AVIONICS**<br><br>**1.** Examine all visible electrical components, wires, cables, and connectors in the area of the forward fuselage for chafing, and general condition and security.<br><br>**2.** Remove battery and recondition in accordance with BHT-ALL-SPM and manufacturer's service manual.<br><br>**3.** Examine battery vent tubes for obstruction or damage.<br><br>**4.** Perform operational test of the battery temperature indicating system.<br><br>**5.** If battery was removed, clean mounting area prior to installing serviceable battery.<br><br>**6.** Verify operation of litter door open warning light.<br><br>**7.** Verify operation of landing lights.<br><br>**8.** Verify operation of lower fuselage mounted position lights (if installed).<br><br>**9.** Examine antennas for condition and security.<br><br>**GROUND RUN**<br><br>**CAUTION**<br><br>GROUND RUN OF HELICOPTER TO BE ACCOMPLISHED BY QUALIFIED PERSONNEL ONLY. | | |
| Chapter 12 | **1.** Make sure applicable servicing requirements have been carried out.<br><br>**2.** Check oil level of transmission, hydraulic tank, engine and rail rotor gearbox prior to running helicopter. | | |

# PROGRESSIVE INSPECTIONS

## 5-25. 300-HOUR AIRFRAME PROGRESSIVE INSPECTION — EVENT NO. 5 (CONT)

| DATA REFERENCE | INSPECTION TASK DESCRIPTION | INITIAL MECH | INITIAL OTHER |
|---|---|---|---|
| | **3.** Make sure that helicopter is ready for ground run and that surrounding area is clear. | | |
| BHT-206L4-FM-1 | **4.** Start the helicopter and conduct ground run at 100% $N_R$ to check for leaks and ensure all systems are operational and parameters are within Flight Manual limitations. | | |
| Chapter 96 | **5.** Check the voltage regulator setting. Adjust as required. | | |

# PROGRESSIVE INSPECTIONS

## 5-26. 300-HOUR AIRFRAME PROGRESSIVE INSPECTION — EVENT NO. 6

| DATA REFERENCE | INSPECTION TASK DESCRIPTION | INITIAL MECH | INITIAL OTHER |
|---|---|---|---|
| | **DATE: _____ W.O. _____** | | |
| | **FACILITY: _____** | | |
| | **HELICOPTER S/N: _____** | | |
| | **REGISTRY NO.: _____** | | |
| | **TOTAL TIME: _____** | | |
| | **SIGNATURE: _____** | | |
| | **ZONE 9 — AFT FUSELAGE** | | |
| | **PLACARDS AND MARKINGS** | | |
| Chapter 11 | **1.** Examine the placards, decals and markings. Make sure they are readable, correctly applied and in agreement with the applicable configuration of your helicopter. | | |
| | **FUSELAGE (EXTERIOR)** | | |
| Chapter 53 | **1.** Examine aft fuselage for dents, cracks, corrosion, delamination, loose or missing rivets and condition. | | |
| | **2.** Examine aft fuselage for indications of fuel or oil leaks. | | |
| Chapter 28 | **3.** Examine the fuel cap for condition and security. | | |
| Chapter 96 | **4.** Examine the grounding plug for condition. | | |
| Chapter 6 and Chapter 53 | **5.** Examine all fuselage drains for condition and freedom from obstructions. | | |
| Applicable Service Instruction | **6.** Examine heater and/or air conditioning inlets and outlets for cleanliness and absence of obstructions, (if installed). | | |
| Chapter 53 | **7.** Examine baggage compartment door, seal, and latches for operation, condition, and security. | | |

# PROGRESSIVE INSPECTIONS

## 5-26. 300-HOUR AIRFRAME PROGRESSIVE INSPECTION — EVENT NO. 6 (CONT)

| DATA REFERENCE | INSPECTION TASK DESCRIPTION | INITIAL MECH | INITIAL OTHER |
|---|---|---|---|
| Chapter 96 | **8.** Verify operation of the baggage door ajar caution light, (if installed). | | |
| | **FUSELAGE (INTERIOR)** | | |
| Chapter 53 | **1.** Examine baggage compartment for condition. | | |
| | **2.** Gain access to inside of aft fuselage through access panels in baggage compartment and access panel located on the aft right hand fuselage: | | |
| | **a.** Examine access panels and fasteners for condition. | | |
| | **b.** Examine under engine pan for fuel, oil or water leaks. | | |
| | **c.** Examine drain lines for condition and security. | | |
| | **d.** Examine interface between longerons and engine pan structure for cracks, corrosion, distortion and loose fasteners. | | |
| | **e.** Inspect engine mount attachment structure for condition. | | |
| | **3.** Remove fuel shutoff valve access panel. | | |
| | **a.** Examine structure for cracks and corrosion. | | |
| Chapter 28 | **b.** Examine fuel system components for leaks and general condition. | | |
| Chapter 96 | **c.** Examine wires and connectors for condition. | | |
| | **CONTROLS** | | |
| Chapter 67 | **1.** Examine the anti-torque control system components for condition and security. | | |
| | **2.** Examine the stabilizer elevator control system components for condition and security. | | |

# PROGRESSIVE INSPECTIONS

## 5-26. 300-HOUR AIRFRAME PROGRESSIVE INSPECTION — EVENT NO. 6 (CONT)

| DATA REFERENCE | INSPECTION TASK DESCRIPTION | INITIAL MECH | INITIAL OTHER |
|---|---|---|---|
| Chapter 96 and Chapter 97 | **ELECTRICAL AND AVIONICS** | | |
| | **1.** Examine antennas for condition and security. | | |
| | **2.** Examine all components, electrical wiring, cables, and connectors for chafing, general condition, and security. | | |
| | **3.** Examine all optional equipment installed in the aft fuselage area for condition and security. | | |
| | **4.** Verify proper operation of fuel sump drain valve switch. | | |
| | **ZONE 10 — LANDING GEAR** | | |
| Chapter 11 | **PLACARDS AND MARKINGS** | | |
| | **1.** Examine the placards, decals and markings. Ensure they are readable, correctly applied and in agreement with the applicable configuration of your helicopter. | | |
| Chapter 32 | **CROSSTUBES** | | |
| | **1.** Examine crosstube retaining straps, cushions, and attaching hardware for condition and security. | | |
| | **2.** Examine fuselage attachment fittings for condition and security. | | |
| | **3.** Examine electrical bonding strips (if installed) for condition and security. | | |
| | **4.** Examine fairings (if installed) for condition and security. | | |
| | **5.** Examine crosstube riveted or clamped supports for condition and security. Give particular attention to the sealant joints around supports. Restore sealant (C-251) and paint finish as required. | | |
| | **6.** Examine crosstubes for corrosion and damage. Give particular attention to areas where equipment is mounted. Repair and/or restore surface protection as required. | | |

# PROGRESSIVE INSPECTIONS

## 5-26. 300-HOUR AIRFRAME PROGRESSIVE INSPECTION — EVENT NO. 6 (CONT)

| DATA REFERENCE | INSPECTION TASK DESCRIPTION | INITIAL MECH | INITIAL OTHER |
|---|---|---|---|
| | **7.** Examine cabin entry steps for condition and security (if installed). | | |
| | **8.** Examine sealant joint at junction with skid tube saddles. Restore sealant (C-251) and paint finish as required. | | |
| Chapter 32 | **SKID TUBES** | | |
| | **1.** Examine skid tubes for corrosion, damage, and security. | | |
| | **2.** Examine skid shoes for condition and security. | | |
| | **3.** Examine skid tube saddles for corrosion, damage, and security. | | |
| | **4.** Examine ground handling wheel attachment bolts for condition and security. | | |
| | **GROUND RUN** | | |
| | **CAUTION**<br>GROUND RUN OF HELICOPTER TO BE ACCOMPLISHED BY QUALIFIED PERSONNEL ONLY. | | |
| Chapter 12 | **1.** Make sure applicable servicing requirements have been carried out. | | |
| | **2.** Check oil level of transmission, hydraulic tank, engine and rail rotor gearbox prior to running helicopter. | | |
| | **3.** Make sure that helicopter is ready for ground run and that surrounding area is clear. | | |
| BHT-206L4-FM-1 | **4.** Start the helicopter and conduct ground run at 100% $N_R$ to check for leaks and ensure all systems are operational and parameters are within Flight Manual limitations. | | |

# PERIODIC INSPECTION

## 5-27. 300-HOUR AIRFRAME PERIODIC INSPECTION

| DATA REFERENCE | INSPECTION TASK DESCRIPTION | INITIAL MUCH | INITIAL OTHER |
|---|---|---|---|
| Chapter 5 Paragraph 5-21 through paragraph 5-26 | **DATE:** _____ **W.O.** _____<br>**FACILITY:** _____<br>**HELICOPTER S/N:** _____<br>**REGISTRY NO.:** _____<br>**TOTAL TIME:** _____<br>**SIGNATURE:** _____<br><br>**1.** Do this inspection every 300 hours of operation or every 12 calendar months.<br><br>**2.** Do all six events of the 300-hour progressive inspection. | | |

# SCHEDULED INSPECTIONS

## 5-28. 100-HOUR INSPECTION

| DATA REFERENCE | INSPECTION TASK DESCRIPTION | INITIAL MECH | INITIAL OTHER |
|---|---|---|---|
| | **DATE:** _____ **W.O.** _____<br>**FACILITY:** _____<br>**HELICOPTER S/N:** _____<br>**REGISTRY NO.:** _____<br>**TOTAL TIME:** _____<br>**SIGNATURE:** _____<br><br>**NOTE**<br>100-hour inspection must be accomplished when using the 300-hour airframe progressive inspection program or the 300-hour airframe periodic inspection program.<br><br>**MAIN ROTOR**<br><br>**1.** Torque check pillow block retention hardware 84 to 107 inch-pounds (9.4 to 12 Nm). Examine for misalignment of anti-slippage marks.<br><br>**TAILBOOM**<br><br>**CAUTION**<br>ANY CRACK, CORROSION, OR LOOSE OR SHEARED RIVET IS CAUSE FOR IMMEDIATE GROUNDING OF THE HELICOPTER UNTIL THE PROBLEM IS CORRECTED. | | |
| Chapter 53<br>Chapter 4 | **2.** Remove access panel on right side of aft fuselage. | | |

# SCHEDULED INSPECTIONS

## 5-28. 100-HOUR INSPECTION (CONT)

| DATA REFERENCE | INSPECTION TASK DESCRIPTION | INITIAL MECH | INITIAL OTHER |
|---|---|---|---|
| | **3.** Examine the four tailboom attachment fittings on fuselage aft bulkhead and tailboom forward bulkhead for cracks. Give special attention to the tailboom attachment fittings/intercostals and bolts, and to fasteners between the intercostal. Particular attention must be given to inspection of the upper left fitting (refer to Chapter 4, Inspection Limitations Schedule).<br><br>**4.** Make sure the area is clean and visually examine all visible sections of the upper left longeron between aft fuselage frame at STA 204.92 and frame at STA 231.486 for general condition, corrosion, and cracks.<br><br>**a.** If corrosion or a defect is found, submit details to Product Support Engineering for evaluation and possible repair. | | |

# SCHEDULED INSPECTIONS

## 5-29. 300-HOUR INSPECTION

| DATA REFERENCE | INSPECTION TASK DESCRIPTION | INITIAL MECH | INITIAL OTHER |
|---|---|---|---|
| | **DATE:** _____ **W.O.** _____<br>**FACILITY:** _____<br>**HELICOPTER S/N:** _____<br>**REGISTRY NO.:** _____<br>**TOTAL TIME:** _____<br>**SIGNATURE:** _____<br><br>**NOTE**<br>Every 300 hours of operation, the 300-hour inspection must be accomplished in conjunction with the 100-hour airframe progressive inspection program or the 100-hour airframe periodic inspection program.<br><br>**MAIN ROTOR**<br><br>**PITCH LINK ASSEMBLY (206-010-360-005)**<br><br>**1.** Examine the condition of the torque seal (C-049) between the main rotor pitch link tube and the upper and lower inserts of both main rotor pitch link assemblies.<br><br>**a.** If the torque seal (C-049) is missing or damaged, carry out a detailed visual inspection (DVI) of the main rotor pitch link tube assembly for debonding of the insert where the torque seal (C-049) is missing or damaged. This can include, but not limited to, cracked paint, cracked sealant, and corrosion.<br><br>**(1)** Remove the torque seal (C-049) residue, and clean inserts and tube with a clean cloth (C-516) moistened with drycleaning solvent (C-304).<br><br>**(2)** If the insert is not debonded, again apply torque seal (C-049), or equivalent. | | |

# SCHEDULED INSPECTIONS

## 5-29. 300-HOUR INSPECTION (CONT)

| DATA REFERENCE | INSPECTION TASK DESCRIPTION | INITIAL MECH | INITIAL OTHER |
|---|---|---|---|
| | **2.** If an insert is found debonded, or is suspected to be, contact Product Support Engineering (PSE) at productsupport@bellflight.com for disposition. Provide the following information:<br><br>**i.** The serial number of the helicopter the suspect parts are found.<br><br>**ii.** The part number of the main rotor pitch link assembly.<br><br>**iii.** The serial number of the main rotor pitch link assembly.<br><br>**iv.** Total time since new of the main rotor pitch link assembly (if known).<br><br>**v.** If it is the upper or lower insert (or both) that is found, or suspected to be, debonded.<br><br>**vi.** Pictures of the debonded, or suspected to be, insert(s). | | |
| | **FORWARD FUSELAGE** | | |
| | **CABIN INTERIOR** | | |
| Chapter 25 | **1.** Remove cabin overhead upholstery, hat bin, soundproofing blanket, aft vertical tunnel covers, and roll-over bulkhead access panels. | | |
| Chapter 53 | **2.** Remove roof beam access panels. | | |
| Chapter 67 | **3.** Examine flight control tubes inside roof beam for condition and security. | | |
| Chapter 53 | **4.** Examine roof beam and roof shell structure for condition. | | |

# SCHEDULED INSPECTIONS

## 5-29. 300-HOUR INSPECTION (CONT)

| DATA REFERENCE | INSPECTION TASK DESCRIPTION | INITIAL MECH | INITIAL OTHER |
|---|---|---|---|
| | **5.** Examine aft passenger seat bulkhead for distortion and/or cracks and indication of screw contact in the area of hat bin attachment nutplates. | | |
| Chapter 96 | **6.** Examine electrical components behind hat bin for condition, security, and cleanliness. | | |
| Chapter 53 | **7.** Examine engine and transmission support structure for cracks, corrosion, or loose fasteners. | | |
| | **CAUTION**<br>EXERCISE CARE AND USE ADEQUATE SCREW LENGTH WHEN REINSTALLING VERTICAL TUNNEL COVER TO AVOID CONTACT WITH TAIL ROTOR CONTROL TUBE. | | |
| | **8.** In the vertical tunnel area, examine the following: | | |
| Chapter 67 | **a.** Flight control system tubes for evidence of chafing with oil line or flex cable. | | |
| | **b.** Flight control system bellcranks, levers, supports, and walking beams for binding, excessive looseness, and security of attachment. | | |
| Chapter 95 | **c.** Oil lines for leakage, condition, and security. | | |
| Chapter 53 | **d.** Roof beam interface with vertical tunnel for cracks, corrosion, and loose fasteners. | | |
| | **e.** Vertical tunnel stiffening angles at roof beam interface for cracks, condition, and loose fasteners. | | |
| Chapter 25 and Chapter 53 | **9.** Remove crew seat cushions and panels and examine the following: | | |

# SCHEDULED INSPECTIONS

## 5-29. 300-HOUR INSPECTION (CONT)

| DATA REFERENCE | INSPECTION TASK DESCRIPTION | INITIAL MECH | INITIAL OTHER |
|---|---|---|---|
| Chapter 67 and Chapter 76 | **a.** Control tubes, $N_1$ throttle cable, bellcranks, levers, yokes, and supports for bending, excessive looseness, and security of attachment. | | |
| Applicable Service Instruction | **b.** Heater ducts (if installed) for chafing with controls. | | |
| Chapter 95 | **c.** Oil lines for leakage and general condition. | | |
| Chapter 96 | **d.** Wiring and electrical components for condition and security. | | |
| Chapter 53 | **e.** Structure for corrosion, cracks, and condition. | | |
| | **CONTROLS** | | |
| Chapter 67 | **1.** Verify minimum friction of collective control and readjust as required. | | |
| | **2.** Verify minimum friction of cyclic control and readjust as required. | | |
| | **3.** Verify minimum friction of control pedals and readjust as required. | | |
| Chapter 96 | **ELECTRICAL** | | |
| | **1.** Remove battery and recondition in accordance with BHT-ALL-SPM and manufacturer's service manual. | | |
| | **FUSELAGE** | | |
| Chapter 52 | **1.** Inspect latches on crew doors for correct adjustment. | | |
| | **2.** Inspect latches on passenger doors, and baggage door for correct adjustment. | | |
| | **PYLON AREA** | | |
| | **SWASHPLATE ASSEMBLY** | | |
| Chapter 62 | **1.** Verify and adjust swashplate tilt friction as required. | | |

# SCHEDULED INSPECTIONS

## 5-29. 300-HOUR INSPECTION (CONT)

| DATA REFERENCE | INSPECTION TASK DESCRIPTION | INITIAL MECH | INITIAL OTHER |
|---|---|---|---|
| | **2.** Value must be between 15 to 32 pounds (67 to 142 N). If out of limits, adjust to 15 to 32 pounds (67 to 142 N) and check again. | | |
| | **HYDRAULIC** | | |
| Chapter 12<br>Chapter 29<br>Chapter 63 | **1.** Remove hydraulic pump and rotor tachometer generator. | | |
| | **2.** Examine hydraulic pump shaft splines and rotor tachometer splines for excessive wear. | | |
| | **3.** Lubricate hydraulic pump shaft splines and rotor tachometer splines. | | |
| | **TRANSMISSION ASSEMBLY** | | |
| | **1.** Examine transmission oil pump splines for excessive wear. | | |
| | **POWER PLANT AREA** | | |
| | **GENERAL** | | |
| Rolls-Royce 250-C30 Series Operation and Maintenance Manual, 14W2 | **1.** Perform engine inspection per the applicable Rolls-Royce Operation and Maintenance Manual. | | |
| Chapter 95 | **2.** Perform operational check of turbine outlet temperature system. | | |
| Chapter 95 and Chapter 12 | **3.** Examine $N_1$ and $N_2$ tachometer generator shaft splines and gearbox adapter splines for condition. Clean and lubricate shaft splines. | | |
| Chapter 28 | **FUEL SYSTEM** | | |
| | **1.** Inspect airframe fuel filter head as follows: | | |

# SCHEDULED INSPECTIONS

## 5-29. 300-HOUR INSPECTION (CONT)

| DATA REFERENCE | INSPECTION TASK DESCRIPTION | INITIAL MECH | INITIAL OTHER |
|---|---|---|---|
| | **NOTE**<br>The following step does not apply to helicopters equipped with fuel filter assembly 222-366-621-103. | | |
| | **a.** Remove outlet port fitting from filter head. | | |
| | **b.** Pass a 0.020 inch (0.50 mm) wire through the bleed hole in outlet port side of filter head to ensure hole is not obstructed. | | |
| | **2.** Replace airframe fuel filter element. | | |
| Chapter 28 | **3.** Purge airframe and engine fuel system as follows: | | |
| | **a.** Turn both fuel boost pumps ON. | | |
| | **b.** Depress airframe fuel filter bypass valve “press to test” button on fuel filter head until there is no evidence of air coming out of the lower fuel filter drain port and out of the fuel filter outlet supply line. | | |
| Rolls-Royce 250-C30 Series Operation and Maintenance Manual, 14W2 | **c.** Then proceed with Rolls-Royce engine fuel system purging procedure. | | |
| | **4.** Ensure air is purged from fuel filter head and check for fuel leaks during ground run. | | |
| | **STARTER GENERATOR** | | |
| Chapter 71 | **1.** Remove starter generator. Examine mounting pad and clamp for condition. | | |
| Chapter 96 | **2.** Examine commutator for wear. Replace starter generator if not smooth and bright or if showing excessive wear. | | |
| | **3.** Inspect brushes for wear. | | |
| Chapter 71 | **4.** Examine cooling duct and retention clamp for condition and security. | | |

# SCHEDULED INSPECTIONS

## 5-29. 300-HOUR INSPECTION (CONT)

| DATA REFERENCE | INSPECTION TASK DESCRIPTION | INITIAL MECH | INITIAL OTHER |
|---|---|---|---|
| | **5.** Examine the splines on starter generator shaft and engine gear shaft. | | |
| | **AFT FUSELAGE/TAILBOOM AREA** | | |
| | **AFT FUSELAGE** | | |
| | **1.** Visually inspect longeron and engine pan interface for corrosion as follows: | | |
| | **a.** Open access door in overhead baggage compartment. | | |
| | **b.** Open engine compartment cowling. | | |
| | **c.** Using bright light and mirror, inspect exposed upper and lower edges of the joints and fastener between aluminum longeron and titanium engine pan. Edge of sealant coating should be visible. No indications of corrosion are acceptable. | | |
| BHT-206-SRM-1 | **d.** If there is no indication of corrosion and the bonded surface seal is present, replace access panel and close engine compartment cowling door. If corrosion is present or bonded surface seal is not present, refer to the BHT-206-SRM-1 for repair procedures. | | |
| | **e.** Inspect engine mount attachment structures for cracks and condition. | | |
| | **f.** Remove fuel shutoff valve access panel. Inspect area for corrosion, cracks, and fuel leaks. Check wiring and plumbing for security and condition. | | |
| | **g.** Inspect aft passenger rear bulkhead for indication of screw contact or cracks in area of hat bin attachment anchor nuts. | | |
| | **2.** Inspect aft passenger rear bulkhead for distortion in area of hat bin attachment anchor nuts. | | |
| | **DRIVETRAIN** | | |
| Chapter 65 and Chapter 12 | **1.** Examine forward short shaft (steel) splined adapters for excessive wear and lubricate. | | |

# SCHEDULED INSPECTIONS

## 5-29. 300-HOUR INSPECTION (CONT)

| DATA REFERENCE | INSPECTION TASK DESCRIPTION | INITIAL MECH | INITIAL OTHER |
|---|---|---|---|
| BHT-ALL-SPM, Chapter 6 | **2.** Using dye penetrant methods, inspect oil cooler blower impeller 206-061-432-031 for cracks. Give particular attention to the mounting flange where individual blades attach. | | |
| | **TAIL ROTOR DRIVESHAFT** | | |
| Chapter 65 | **1.** Lubricate oil cooler blower and tail rotor driveshaft hanger bearings and check for evidence of overheating. | | |
| Chapter 12 | **2.** Examine and lubricate aft short shaft (aluminum) and aft tail rotor driveshaft splined adapters. | | |
| Chapter 65 | **TAIL ROTOR GEARBOX** | | |
| | Torque check tail rotor gearbox retaining nuts 50 to 70 inch-pounds (5.6 to 7.9 Nm). | | |
| | **TAIL ROTOR HUB AND BLADE ASSEMBLY** | | |
| Chapter 64 | **1.** Check dynamic balance of tail rotor hub and blade assembly. | | |
| | **2.** Adjust as required. | | |

# SCHEDULED INSPECTIONS

## 5-30. 1200-HOUR INSPECTION

| DATA REFERENCE | INSPECTION TASK DESCRIPTION | INITIAL MECH | INITIAL OTHER |
|---|---|---|---|
| | **DATE: _____W.O. _____**<br>**FACILITY: _____**<br>**HELICOPTER S/N: _____**<br>**REGISTRY NO.: _____**<br>**TOTAL TIME:_____**<br>**SIGNATURE:_____** | | |
| | **NOTE**<br>This inspection must be accomplished every 1200 flight hours. | | |
| Chapter 67 | **CYCLIC CONTROL STICK** | | |
| Chapter 67 | **1.** Open right crew door to gain access to pilot cyclic control stick. Remove cyclic control stick. | | |
| BHT-206L-CR&O | **2.** Clean lower 4 inches of removed cyclic stick tube and inspect. | | |
| | **3.** Visually inspect cyclic stick tube for cracks using a 3X magnifying glass. Pay particular attention to the area adjacent to the two slots in the tube where two bolts secure the tube when installed in the pivot lever assembly. | | |
| BHT-206L-CR&O<br>BHT-ALL-SPM | **4.** If a crack is suspected, remove paint and thoroughly inspect lower end of the cyclic stick tube for cracking using the fluorescent penetrant method. | | |
| | **5.** If a crack is found, replace the cyclic stick tube with a serviceable tube. | | |

# SCHEDULED INSPECTIONS

## 5-30. 1200-HOUR INSPECTION (CONT)

| DATA REFERENCE | INSPECTION TASK DESCRIPTION | INITIAL MECH | INITIAL OTHER |
|---|---|---|---|
| | **6.** If no crack is found, inspect cyclic stick tube for mechanical and corrosion damage as follows:<br><br>**a.** Damaged and repaired areas must be separated by 1.0 inch (25 mm) minimum.<br><br>**b.** Mechanical damage is not to exceed 0.005 inch (0.127 mm) depth and 1/3 tube circumference.<br><br>**c.** Corrosion damage is not to exceed 0.0025 inch (0.0635 mm) depth before and 0.005 inch (0.127 mm) after repair and 1/3 tube circumference.<br><br>**d.** Condemn as unserviceable a tube that does not meet these criteria.<br><br>**7.** Inspect bore of cyclic pivot lever assembly where stick tube is installed for mechanical and corrosion damage. Bore damage is not to exceed 0.002 inch (0.051 mm) for 1/4 of the circumference. Limit of one repair per bore. Repair or replace lever assembly as required.<br><br>**8.** For cyclic stick tubes considered serviceable, polish out any acceptable damage using 400 to 600 grit abrasive paper (C-423).<br><br>**9.** Thoroughly clean cyclic stick tube with water and mild detergent to completely remove residual penetrant and developer. Dry part completely. | | |
| BHT-ALL-SPM | **10.** Apply chemical film material (C-100) to bare metal area. | | |
| BHT-ALL-SPM | **11.** Touch up area with epoxy polyamide primer (C-204). Where finish paint coat is required, match to original finish using polyurethane coating (C-245). | | |
| Chapter 67 | **12.** Install cyclic control stick. | | |

# SCHEDULED INSPECTIONS

## 5-30. 1200-HOUR INSPECTION (CONT)

| DATA REFERENCE | INSPECTION TASK DESCRIPTION | INITIAL MECH | INITIAL OTHER |
|---|---|---|---|
| | **TAILBOOM**<br><br>**NOTE**<br>This inspection is to be complied with every 1200 hours of tailboom operation after compliance with ASB 206L-99-115, except as follows:<br><br>The inspection is not required for tailbooms<br>P/N 206-033-004-181/-199 and subsequent<br>P/N 206-704-727-101<br>P/N 206-074-727-103<br>P/N 206-707-727-105<br>All tailbooms upgraded per PSE letter and reidentified as an equivalent of 206-033-004-199.<br><br>**1.** Prepare tailboom assembly for inspection by removing the following components:<br><br>**a.** Auxiliary fin assembly.<br><br>**b.** Slat assembly.<br><br>**c.** Stabilizer and support.<br><br>**2.** Gain access to inside of tailboom from right side. Using a bright light, perform inspection of skin on inside surface of left side of tailboom for cracks.<br><br>**a.** Inspect skin in area where doubler is attached.<br><br>**b.** Inspect each rivet location for signs of loose or working rivets and for cracks that start at rivet holes.<br><br>**3.** Using a 10X magnifying glass, perform a visual inspection of external left side of tailboom at doubler and skin around doubler in the following areas:<br><br>**a.** Inspect internal edge of doubler for cracks.<br><br>**b.** Inspect support attachment holes for cracks.<br><br>**c.** Inspect each rivet location for loose or working rivets and cracks that start from rivet holes. | | |

## 5-30. 1200-HOUR INSPECTION (CONT)

| DATA REFERENCE | INSPECTION TASK DESCRIPTION | INITIAL MECH | INITIAL OTHER |
|---|---|---|---|
| | **d.** Inspect edge of doubler for delamination between skin and doubler.<br><br>**e.** Inspect tailboom skin area up to 1.00 inch (25.40 mm) area around doubler for cracks.<br><br>**4.** Using a 10X magnifying glass, perform a visual inspection of external right side of tailboom skin stabilizer cutout.<br><br>**a.** Inspect edge of cutout for cracks in skin.<br><br>**b.** Inspect support attachment holes for cracks in skin.<br><br>**5.** If a crack is detected in tailboom skin or doubler, contact Product Support Engineering as follows:<br><br>**TAIL ROTOR CONTROL TUBE (206-001-058-001, AND -101)** | | |
| Chapter 67 | **1.** Remove and inspect tail rotor control tube for wear and corrosion, and nylatron sleeve for debonding at five areas where tube contacts tailboom fairleads as follows:<br><br>**a.** To gain access to control tube, remove tail rotor gearbox fairing and access panel on right side of aft fuselage adjacent to tailboom.<br><br>**b.** Remove bolt at forward end of control tube. At the bellcrank, disconnect the small control rod coming from pitch change mechanism. Remove bolt attaching bellcrank to bracket.<br><br>**c.** Pull control tube through aft end of tailboom with bellcrank attached.<br><br>**2.** Inspect tail rotor control tube and nylatron sleeves at five areas where tube contacts fairleads as follows:<br><br>**a.** If nylatron sleeves show wear on one side only, but surface of control tube is unworn, tube may be rolled 180° and reinstalled. | | |

# SCHEDULED INSPECTIONS

## 5-30. 1200-HOUR INSPECTION (CONT)

| DATA REFERENCE | INSPECTION TASK DESCRIPTION | INITIAL MECH | INITIAL OTHER |
|---|---|---|---|
| BHT-206L-CR&O | **b.** If nylatron sleeves were worn through, exposing bare surface of control tube, and control tube is worn not in excess of 0.004 inch (0.10 mm) on one side only, replace worn nylatron sleeves.<br><br>**c.** If control tube is worn greater than 0.004 inch (0.10 mm) at any point, or if wear extends more than half way around tube regardless of depth, scrap control tube.<br><br>**d.** Inspect tube for corrosion. Pay particular attention to bond line at nylatron sleeves. | | |
| Chapter 67 | **3.** Install and connect control tubes, and bellcrank in tailboom. Reinstall tail rotor gearbox fairing and access panel on right side of aft fuselage. | | |

# SCHEDULED INSPECTIONS

## 5-31. AS REQUIRED BY MANUFACTURER

| DATA REFERENCE | INSPECTION TASK DESCRIPTION | INITIAL MECH | INITIAL OTHER |
|---|---|---|---|
| | **DATE:** _____ **W.O.** _____<br>**FACILITY:** _____<br>**HELICOPTER S/N:** _____<br>**REGISTRY NO.:** _____<br>**TOTAL TIME:** _____<br>**SIGNATURE:** _____ | | |
| | **ENGINE** | | |
| Rolls-Royce 250-C30 Series Operations and Maintenance Manual, 14W2 | Perform engine inspection requirements. | | |

# SCHEDULED INSPECTIONS

## 5-32. WEEKLY INSPECTION

| DATA REFERENCE | INSPECTION TASK DESCRIPTION | INITIAL MECH | INITIAL OTHER |
|---|---|---|---|
| | **DATE:** _____ **W.O.** _____<br><br>**FACILITY:** _____<br><br>**HELICOPTER S/N:** _____<br><br>**REGISTRY NO.:** _____<br><br>**TOTAL TIME:** _____<br><br>**SIGNATURE:** _____ | | |
| Chapter 62,<br>Chapter 64 | **MAIN ROTOR HUB AND BLADES, AND TAIL ROTOR HUB AND BLADES**<br><br>— Preventive maintenance.<br><br>**NOTE**<br><br>The following procedures shall be accomplished as frequently as deemed necessary when operating in rain, corrosive salt laden air, or other adverse environmental conditions.<br><br>The following preventive maintenance procedures for the main rotor hub and blades and tail rotor hub and blades are recommended to prevent corrosion and extend their life.<br><br>The inspection may be accomplished more frequently or may be extended beyond the weekly interval, as deemed necessary, based on the actual operating environment.<br><br>**1.** Wipe hub and blades with drycleaning solvent (C-304).<br><br>**2.** Wash hub and blades with cleaning compound (C-318). Rinse with water and dry with clean cloths.<br><br>**3.** Inspect hub and blades for evidence of corrosion. | | |

# SCHEDULED INSPECTIONS

## 5-32. WEEKLY INSPECTION (CONT)

| DATA REFERENCE | INSPECTION TASK DESCRIPTION | INITIAL MECH | INITIAL OTHER |
|---|---|---|---|
| | **NOTE**<br>Do not allow preservative oil (C-125) to contact tail rotor blade bearings.<br><br>**4.** Apply a light coat of preservative oil (C-125) to all hub and blade surfaces. Flood areas between main rotor hub grip tangs and blades, latch bolts to grips, and yoke fillet areas just inboard of pitch horn to ensure complete coverage. | | |

# SCHEDULED INSPECTIONS

## 5-33. 12-MONTH INSPECTION

| DATA REFERENCE | INSPECTION TASK DESCRIPTION | INITIAL MECH | INITIAL OTHER |
|---|---|---|---|
| | **DATE:** _____ **W.O.** _____<br><br>**FACILITY:** _____<br><br>**HELICOPTER S/N:** _____<br><br>**REGISTRY NO.:** _____<br><br>**TOTAL TIME:** _____<br><br>**SIGNATURE:** _____<br><br>**GENERAL**<br><br>**1.** Ensure that a 100 or 300-hour airframe progressive inspection (all four or six events, as applicable) or the 100 or 300-hour airframe periodic inspection has been completed in the last 12 calendar month period.<br><br>**2.** Perform a dynamic balance of the main rotor hub and blade assembly.<br><br>**MAIN ROTOR**<br><br>**MAIN ROTOR BLADES**<br><br>**NOTE**<br>Performance of this inspection does not require removal of blades from the main rotor hub. | | |
| Chapter 62 | **1.** Wash the upper and lower main rotor blade surfaces with cleaning compound (C-318) and water solution .<br><br>**NOTE**<br>Hair line cracks in the paint finish must be suspect for possible cracks/voids. | | |

# SCHEDULED INSPECTIONS

## 5-33. 12-MONTH INSPECTION (CONT)

| DATA REFERENCE | INSPECTION TASK DESCRIPTION | INITIAL MECH | INITIAL OTHER |
|---|---|---|---|
| | **NOTE**<br>Any potential cracks in the bond lines between the doublers or grip plates will be indicated by the presence of excess alcohol bleeding out of an edge void. This excess alcohol in the void will appear as a dark line between the bond lines of the doublers. Continue with the inspection of an area immediately after the alcohol wipe.<br><br>**2.** Wipe the area to be inspected with an isopropyl alcohol (C-385) and wipe dry with a clean cloth.<br><br>**3.** Visually examine the main rotor blade upper and lower grip plates and doublers for signs of cracks, corrosion, and edge voids as follows. Pay particular attention to the bond lines between the doublers, grip plates, and skin:<br><br>**a.** Using a 3X power magnifying glass and a strong light source do a visual inspection of the top and bottom inspection areas.<br><br>**b.** Check for evidence of a dark line between the doublers, grip plates, and skin with excess alcohol bleeding out for possible edge voids.<br><br>**CAUTION**<br><br>PAY PARTICULAR ATTENTION NOT TO REMOVE PARENT MATERIAL FROM THE SKIN/DOUBLERS DURING THE SANDING OPERATION.<br><br>**c.** If cracks in the finish are found between doublers, grip plates and skin edges, sand the affected area in a spanwise direction with an abrasive cloth (C-406) 180 to 220 grit to find if the grip plate/doublers are cracked or voided. | | |

# SCHEDULED INSPECTIONS

## 5-33. 12-MONTH INSPECTION (CONT)

| DATA REFERENCE | INSPECTION TASK DESCRIPTION | INITIAL MECH | INITIAL OTHER |
|---|---|---|---|
| Chapter 62 | **d.** If any edge voids are found between doublers, grip plates and skin, find the depth and length with a 0.0015 inch (0.038 mm) feeler gauge. If the edge voids are suspected near the outboard tip of the doublers and grip plate, do a tap test of the affected area. If any void is found outside of limits, contact Product Support Engineering. | | |
| Chapter 62 | **e.** Finish sanded areas. | | |
| Chapter 62 | **4.** Following the inspection, apply a light coat of preservative oil (C-125) to all surfaces of the blade. | | |
| | **FUEL SYSTEM** | | |
| Chapter 96 | **1.** Check operation of low fuel caution system. | | |
| | **AIRFRAME** | | |
| | Remove overhead upholstery, hat bin, soundproofing blanket, and access panels. Inspect engine and transmission support structure for cracks and corrosion. | | |

# SCHEDULED INSPECTIONS

## 5-34. 12 MONTHS OF COMPONENT OPERATION

| DATA REFERENCE | INSPECTION TASK DESCRIPTION | INITIAL MECH | INITIAL OTHER |
|---|---|---|---|
| | **DATE:** _____ **W.O.** _____<br>**FACILITY:** _____<br>**HELICOPTER S/N:** _____<br>**REGISTRY NO.:** _____<br>**TOTAL TIME:** _____<br>**SIGNATURE:** _____ | | |
| Chapter 62<br>BHT-206A/B/L-Series-CR&O | **MAIN ROTOR MAST**<br><br>**1.** Inspect mast assembly as follows:<br><br>**a.** Remove mast nut, flap restraint kit, and cap plug. With the help of a bright light, inspect internal surface (internal diameter) of mast for corrosion and condition of protective coating.<br><br>**b.** Install cap plug, flap restraint kit, and mast nut.<br><br>**2.** Check mast nut for torque after 1 to 5 hours of flight operation (TB 206L-07-223). | | |

# SCHEDULED INSPECTIONS

## 5-35. 24-MONTH INSPECTION

| DATA REFERENCE | INSPECTION TASK DESCRIPTION | INITIAL MECH | INITIAL OTHER |
|---|---|---|---|
| | **DATE:** _____ **W.O.** _____<br><br>**FACILITY:** _____<br><br>**HELICOPTER S/N:** _____<br><br>**REGISTRY NO.:** _____<br><br>**TOTAL TIME:** _____<br><br>**SIGNATURE:** _____<br><br>**MAIN ROTOR FLIGHT CONTROL BOLTS/NUTS**<br><br>**1.** Remove main rotor flight control bolts/nuts (1 through 14, Figure 5-2).<br><br>**2.** Clean bolts/nuts with MEK (C-309). Wipe dry.<br><br>**3.** Visually inspect bolts/nuts for corrosion and thread damage. Replace any bolts/nuts that have damaged threads, detectable wear and/or corrosion pitting.<br><br>**4.** Apply a coating of corrosion preventive compound (C-104) to all bolt shanks prior to installation. Do not apply corrosion preventive compound to bolt threads.<br><br>**5.** Install flight control bolts and attaching hardware. Torque nuts and install new cotter pins.<br><br>**6.** Apply a coating of corrosion preventive compound (C-101) to all bolt heads, washers, nuts, and exposed threads after installation.<br><br>**NOTE**<br><br>Operation in environmental conditions that erode corrosion preventive compound (C-101) may require periodic touch-up of corrosion preventive compound. Before touch-up, visually check exposed surfaces for evidence of corrosion. If corrosion is detected, accomplish step 1 through step 6. | | |

# SCHEDULED INSPECTIONS

## 5-35. 24-MONTH INSPECTION (CONT)

| DATA REFERENCE | INSPECTION TASK DESCRIPTION | INITIAL MECH | INITIAL OTHER |
|---|---|---|---|
| Chapter 28 | **FUEL SYSTEM**<br><br>**1.** Remove fuel boost pump assemblies and inspect fuel cell interiors for debris, water contamination, and fungus growth.<br><br>**2.** Remove, clean, and inspect fuel manifold assembly.<br><br>**3.** Remove, clean, and inspect inline fuel filters and check valves. | | |

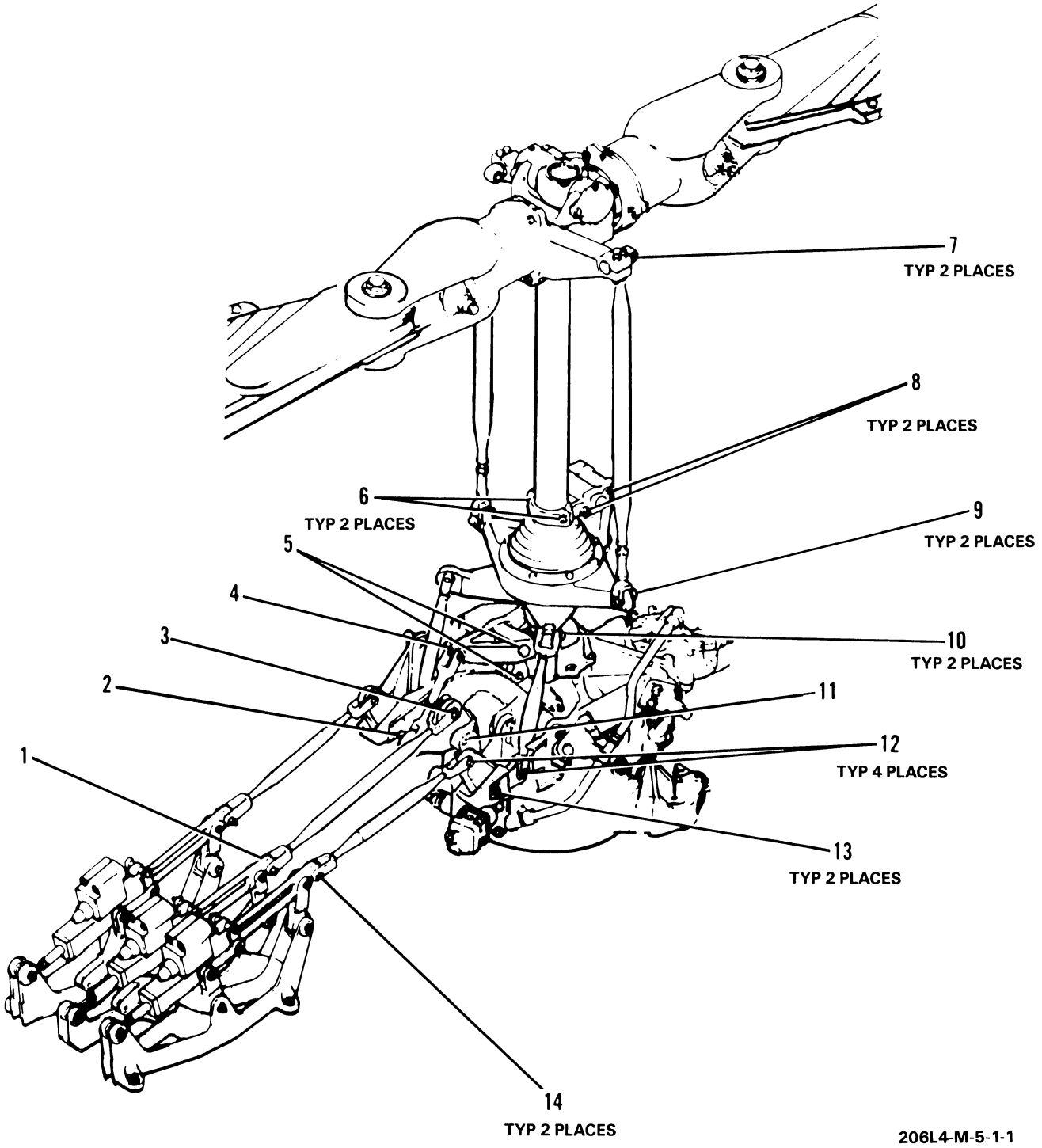


Figure 5-2. Inspection of Main Rotor Flight Control Bolts/Nuts (Sheet 1 of 2)

1. Collective servo to control tube
2. Collective bellcrank to control link assembly
3. Control tube to collective bellcrank
4. Control link to collective lever assembly
5. Link assembly (collective lever to swashplate support)
6. Swashplate drive collar set
7. M/R pitch links to M/R hub pitch horn
8. Swashplate drive link/lever assembly
9. Swashplate to M/R pitch link
10. Cyclic control tubes to swashplate
11. Collective bellcrank pivot
12. Control tube to cyclic bellcrank
13. Cyclic bellcrank pivot
14. Cyclic servo to control tube

206L4-M-5-1-2

Figure 5-2. Inspection of Main Rotor Flight Control Bolts/Nuts (Sheet 2 of 2)

# SCHEDULED INSPECTIONS

## 5-36. 60-MONTH INSPECTION

| DATA REFERENCE | INSPECTION TASK DESCRIPTION | INITIAL MECH | INITIAL OTHER |
|---|---|---|---|
| | **DATE:** _____ **W.O.** _____<br>**FACILITY:** _____<br>**HELICOPTER S/N:** _____<br>**REGISTRY NO.:** _____<br>**TOTAL TIME:** _____<br>**SIGNATURE:** _____ | | |
| BHT-206L4-MM<br>BHT-206L-CR&O | **FREEWHEEL ASSEMBLY**<br><br>**NOTE**<br>This inspection applies to helicopters equipped with freewheel assembly 406-040-500-143 (or subsequent).<br><br>Do this inspection if an overhaul of the applicable freewheel assembly has not been accomplished in the last 60 months.<br><br>**1.** Remove the freewheel assembly.<br><br>**2.** Disassemble the freewheel assembly.<br><br>**NOTE**<br>Do not do a non-destructive inspection. It is not necessary to remove paint from the parts.<br><br>**3.** Examine the parts of the freewheel assembly for condition.<br><br>**4.** Restore the surface finish of the damaged part(s), as applicable.<br><br>**5.** Assemble the freewheel assembly.<br><br>**6.** Install the freewheel assembly. | | |

# SCHEDULED INSPECTIONS

## 5-37. 300-HOUR OR 12-MONTH INSPECTION

| DATA REFERENCE | INSPECTION TASK DESCRIPTION | INITIAL MECH | INITIAL OTHER |
|---|---|---|---|
| | **DATE:** _____ **W.O.** _____<br>**FACILITY:** _____<br>**HELICOPTER S/N:** _____<br>**REGISTRY NO.:** _____<br>**TOTAL TIME:** _____<br>**SIGNATURE:** _____<br><br>**NOTE**<br>This inspection is only applicable when conducting the 100-hour airframe progressive or 100-hour airframe periodic inspection program. | | |
| BHT-ELEC-SPM | **BATTERY**<br><br>Remove battery and recondition according to the BHT-ELEC-SPM and manufacturer's service manual. Inspect vent lines for obstructions or damage. Clean battery mounting area prior to installing serviceable battery. | | |

# SCHEDULED INSPECTIONS

## 5-38. 600-HOUR OR 12-MONTH INSPECTION

| DATA REFERENCE | INSPECTION TASK DESCRIPTION | INITIAL MECH | INITIAL OTHER |
|---|---|---|---|
| | **DATE:** _____ **W.O.** _____ | | |
| | **FACILITY:** _____ | | |
| | **HELICOPTER S/N:** _____ | | |
| | **REGISTRY NO.:** _____ | | |
| | **TOTAL TIME:** _____ | | |
| | **SIGNATURE:** _____ | | |
| Chapter 96 | **ELECTRICAL** | | |
| | **1.** Perform operational test of internal battery overtemperature switches. | | |
| Chapter 63 | **2.** Remove rotor tachometer generator. | | |
| | **a.** Remove, examine, and lubricate the rotor tachometer generator internal drive splines and input shaft splines (TB 206L-09-235). | | |

# SCHEDULED INSPECTIONS

## 5-39. 1200 HOURS OF COMPONENT OPERATION

| DATA REFERENCE | INSPECTION TASK DESCRIPTION | INITIAL MECH | INITIAL OTHER |
|---|---|---|---|
| | **DATE:** _____ **W.O.** _____<br>**FACILITY:** _____<br>**HELICOPTER S/N:** _____<br>**REGISTRY NO.:** _____<br>**TOTAL TIME:** _____<br>**SIGNATURE:** _____ | | |
| BHT-206L-CR&O | **MAIN ROTOR HUB ASSEMBLY**<br><br>**NOTE**<br>For main rotor hub assemblies which were greased with high pressure grease (C-172) during and since last overhaul or since new, trunnion and pillow blocks do not need to be removed for inspection prior to overhaul.<br><br>**1.** Inspect yoke and trunnion bearing surfaces for brinelling.<br><br>**2.** Inspect yoke, latch bolts, strap pins, strap fittings, trunnion, pillow blocks, grips, and pitch horns for corrosion.<br><br>**3.** Visually inspect all hub components for excessive wear or damage. | | |

# SCHEDULED INSPECTIONS

## 5-40. 1500 HOURS OF COMPONENT OPERATION

| DATA REFERENCE | INSPECTION TASK DESCRIPTION | INITIAL MECH | INITIAL OTHER |
|---|---|---|---|
| | **DATE:** _____ **W.O.** _____<br>**FACILITY:** _____<br>**HELICOPTER S/N:** _____<br>**REGISTRY NO.:** _____<br>**TOTAL TIME:** _____<br>**SIGNATURE:** _____ | | |
| Chapter 63<br>BHT-206A/B/L-Series-CR&O | **MAIN ROTOR MAST**<br><br>**1.** Remove, disassemble, and clean main rotor mast.<br><br>**2.** Inspect main rotor mast as follows:<br><br>**a.** Visually inspect mast splines for burrs, nicks, cracks, and wear. Indication of wear requires an over pins dimensional check.<br><br>**b.** Visually inspect mast inner and outer surfaces for corrosion. Inspect surface protective coatings for condition.<br><br>**c.** Visually inspect bearing balls and races for pits, erosion, spalling, and brinelling.<br><br>**3.** Reassemble and install main rotor mast. | | |

# SCHEDULED INSPECTIONS

## 5-40. 1500 HOURS OF COMPONENT OPERATION (CONT)

| DATA REFERENCE | INSPECTION TASK DESCRIPTION | INITIAL MECH | INITIAL OTHER |
|---|---|---|---|
| | **TRANSMISSION** | | |
| | **NOTE**<br>This inspection is applicable to transmission assemblies that have been operated with MIL-PRF-7808 oil since new or since last overhaul.<br>To increase the inspection interval to 2250 Hours or 60 months, the transmission must have been operated with DOD-PRF-85734 oil since new or since the last overhaul (TB 206L-04-213). | | |
| Chapter 63 | **1.** If installed on the helicopter, remove the transmission assembly. | | |
| | **2.** Remove the mast and swashplate assembly from the transmission assembly. | | |
| | **3.** Inspect oil filter for debris and metal contamination. | | |
| BHT-206L-CR&O | **4.** Remove the transmission top case, the planetary assembly, and the sun gear. | | |
| | **5.** Visually examine all removed components for condition. | | |
| | **6.** Insert a mirror between the spiral bevel gear edge and the lower case and use a bright light to examine the spiral bevel gear, input pinion gears, and surrounding areas for condition. | | |
| | **7.** Reassemble the transmission. | | |
| Chapter 63 | **8.** Install the mast and swashplate assembly into the transmission assembly. | | |
| | **9.** Apply sealant, primer, and paint to the required areas. | | |
| | **10.** Install the transmission assembly into the helicopter. | | |
| Chapter 12 | **11.** Service the transmission with oil. | | |

# SCHEDULED INSPECTIONS

## 5-41. 2250 HOURS OR 60 MONTHS OF COMPONENT OPERATION

| DATA REFERENCE | INSPECTION TASK DESCRIPTION | INITIAL MECH | INITIAL OTHER |
|---|---|---|---|
| | **DATE:** _____ **W.O.** _____<br>**FACILITY:** _____<br>**HELICOPTER S/N:** _____<br>**REGISTRY NO.:** _____<br>**TOTAL TIME:** _____<br>**SIGNATURE:** _____ | | |
| | **TRANSMISSION**<br><br>**NOTE**<br>This inspection is applicable to transmission assemblies 206-040-004-115 and subsequent that have been operating with DOD-PRF-85734 oil since new or since last overhaul (TB 206L-04-213).<br><br>If the transmission has been operated with MIL-PRF-7808 oil, the 1500 Hours Of Component Operation scheduled inspection applies. | | |
| Chapter 63 | **1.** If installed on the helicopter, remove the transmission assembly. | | |
| | **2.** Remove the mast and swashplate assembly from the transmission assembly. | | |
| | **3.** Inspect oil filter for debris and metal contamination. | | |
| BHT-206L-CR&O | **4.** Remove the transmission top case, the planetary assembly, and the sun gear. | | |
| | **5.** Visually examine all removed components for condition. | | |
| | **6.** Insert a mirror between the spiral bevel gear edge and the lower case and use a bright light to examine the spiral bevel gear, input pinion gears, and surrounding areas for condition. | | |

# SCHEDULED INSPECTIONS

## 5-41. 2250 HOURS OR 60 MONTHS OF COMPONENT OPERATION (CONT)

| DATA REFERENCE | INSPECTION TASK DESCRIPTION | INITIAL MECH | INITIAL OTHER |
|---|---|---|---|
| | **7.** Reassemble the transmission. | | |
| Chapter 63 | **8.** Install the mast and swashplate assembly into the transmission assembly. | | |
| | **9.** Apply sealant, primer, and paint to the required areas. | | |
| | **10.** Install the transmission assembly into the helicopter. | | |
| Chapter 12 | **11.** Service the transmission with oil (DOD-PRF-85734). | | |

# SCHEDULED INSPECTIONS

## 5-42. 3000 HOURS OF COMPONENT OPERATION

| DATA REFERENCE | INSPECTION TASK DESCRIPTION | INITIAL MECH | INITIAL OTHER |
|---|---|---|---|
| | **DATE:** _____ **W.O.** _____<br>**FACILITY:** _____<br>**HELICOPTER S/N:** _____<br>**REGISTRY NO.:** _____<br>**TOTAL TIME:** _____<br>**SIGNATURE:** _____ | | |
| BHT-206L-CR&O | **TAIL ROTOR GEARBOX**<br><br>**NOTE**<br>This inspection may be accomplished concurrently with the duplex bearing (206-040-410-005, -101, or subsequent) replacement at 3000 hours.<br><br>**1.** Perform backlash check of the gearbox prior to disassembly. Backlash shall be 0.003 to 0.011 inch (0.08 to 0.28 mm) and shall not vary more than 0.002 inch (0.05 mm) when measured at three different locations. Record backlash for later reference.<br><br>**NOTE**<br>If this inspection is being done in conjunction with replacement of bearing (206-040-410-005, -101, or subsequent), removal of input pinion assembly is not required. Remove output cap, output shaft, and duplex bearing (206-040-410-005, -101, or subsequent) after complying with step 1.<br><br>**2.** Remove input pinion and bearings. Remove output cap and oil level sight glass.<br><br>**3.** Inspect spiral bevel gear and input pinion gear for corrosion and chipped, broken, or worn gear teeth. Inspect gear wear patterns. | | |

# SCHEDULED INSPECTIONS

## 5-42. 3000 HOURS OF COMPONENT OPERATION (CONT)

| DATA REFERENCE | INSPECTION TASK DESCRIPTION | INITIAL MECH | INITIAL OTHER |
|---|---|---|---|
| | **4.** Visually inspect accessible areas of input pinion duplex bearing, input pinion roller alignment bearing, and output shaft roller alignment bearing and race for roughness, spalling, scoring, pitting, flaking, broken or damaged retainers, and for evidence of overheating and corrosion.<br><br>**5.** Visually inspect studs and dowel pins in case assembly for security and damage. Replace damaged studs and/or dowel pins.<br><br>**6.** Inspect accessible areas of case and output cap for corrosion and damage.<br><br>**7.** Inspect sight glass for cracking, crazing, or any condition that may obscure level or color of oil. Inspect oil level indicator for discoloration, peeling paint, or evidence of a plastic film on painted side. Remove plastic film if present.<br><br>**8.** Reassemble gearbox. Exercise caution when inserting input pinion assembly, if previously removed, to ensure proper gear mesh with spiral bevel gear.<br><br>**9.** Check gearbox backlash. Measured values shall be within 0.001 inch (0.03 mm) of those obtained in step 1.<br><br>**NOTE**<br><br>If input pinion and spiral bevel gear were replaced at this time, backlash figures may not fall within 0.001 inch (0.03 mm) of those obtained in step 1. Backlash shall, however, fall within overhaul limits.<br><br>**10.** Apply sealant and touch up finish as required. | | |

## 5-43. SPECIAL INSPECTIONS

Accomplish the following special inspections on the helicopter (paragraph 5-44 through paragraph 5-48):

- After fuel system maintenance and/or component change
- 1 to 5 hours after each installation
- 3 to 8 hours after each installation
- 10 to 25 hours after each installation
- 100 hours after each installation

# SPECIAL INSPECTIONS

## 5-44. AFTER FUEL SYSTEM MAINTENANCE AND/OR COMPONENT CHANGE

| DATA REFERENCE | INSPECTION TASK DESCRIPTION | INITIAL MECH | INITIAL OTHER |
|---|---|---|---|
| | **DATE: _____W.O. _____**<br>**FACILITY: _____**<br>**HELICOPTER S/N: _____**<br>**REGISTRY NO.: _____**<br>**TOTAL TIME:_____**<br>**SIGNATURE:_____**<br><br>**NOTE**<br>Accomplish immediately after fuel system maintenance and/or component change/removal, at an adequate maintenance facility. | | |
| Chapter 28 | **FUEL SYSTEM**<br><br>**NOTE**<br>Installation and removal of a fuel boost pump cartridge, fuel quantity probe, or fuel drain valve does not require this inspection.<br><br>If fuel system maintenance and/or component change/removal is performed at a site remote from an adequate maintenance facility, accomplish step 1, substep c through substep e, and step 3, or step 2 and step 3, as applicable, prior to flight. Upon return to an adequate maintenance facility, but not to exceed 10 flight hours, accomplish entire inspection.<br><br>**1.** When maintenance or component change/removal is conducted below the top fitting of the aft fuel cell immediately following fuel system maintenance and/or major component change/removal (boost pump assembly, manifold, flow switches, inline filters, ejector pumps, check valves, fuel line or hoses), ground run helicopter and check for air and fuel leaks and for proper operation as follows: | | |

# SPECIAL INSPECTIONS

## 5-44. AFTER FUEL SYSTEM MAINTENANCE AND/OR COMPONENT CHANGE (CONT)

| DATA REFERENCE | INSPECTION TASK DESCRIPTION | INITIAL MECH | INITIAL OTHER |
|---|---|---|---|
| Chapter 12 | **a.** Make sure all fuel has been drained from aft and forward fuel cells. | | |
| | **b.** Service fuel cell with 10 gallons (37.9 L) of fuel. | | |
| BHT-206L4-FM-1 | **c.** Perform normal engine starting and run-up checks. | | |
| | **d.** Set throttle to full open and operate engine at 100% $N_2$ for a minimum of 2 minutes with both fuel boost pumps OFF. If flameout or power loss occurs, refer to step 3. | | |
| | **e.** Perform normal engine shutdown. | | |
| | **f.** Select fuel quantity switch to forward position to ensure fuel transfer from aft to forward fuel cells has not taken place. | | |
| | **2.** When maintenance and/or component change is conducted above the top fitting of the fuel cell, immediately following the fuel system maintenance and/or component change/removal (fuel pressure transducer, fuel valve, scheduled fuel component change/removal fuel line or hose), ground run helicopter and check for air or fuel leaks and for proper operation as follows: | | |
| BHT-206L4-FM-1 | **a.** Perform normal engine start and run-up checks. | | |
| | **b.** Set throttle to full open and operate engine at 100% $N_2$ for a minimum of 2 minutes with both fuel pumps OFF. If flameout or power loss occurs, refer to step 3. | | |
| | **3.** If flameout or power loss occurs, air is entering the helicopter or engine fuel system, or an engine pneumatic leak exists. Malfunction must be corrected before commencing flight operations. | | |
| | **a.** Verify fuel boost pump, check valve, and fuel shutoff valve for proper operation. | | |
| | **b.** Make sure all hoses and lines are serviceable and do not have cracked flares and that B nuts are correctly torqued. | | |

# SPECIAL INSPECTIONS

## 5-44. AFTER FUEL SYSTEM MAINTENANCE AND/OR COMPONENT CHANGE (CONT)

| DATA REFERENCE | INSPECTION TASK DESCRIPTION | INITIAL MECH | INITIAL OTHER |
|---|---|---|---|
| Rolls-Royce 250-C30 Series Operation and Maintenance Manual, 14W2 | **c.** Purge air from fuel system and accomplish pneumatic leak check. | | |

# SPECIAL INSPECTIONS

## 5-45. 1 TO 5 HOURS AFTER EACH INSTALLATION

| DATA REFERENCE | INSPECTION TASK DESCRIPTION | INITIAL MECH | INITIAL OTHER |
|---|---|---|---|
| | **DATE:** _____ **W.O.** _____<br>**FACILITY:** _____<br>**HELICOPTER S/N:** _____<br>**REGISTRY NO.:** _____<br>**TOTAL TIME:** _____<br>**SIGNATURE:** _____ | | |
| Chapter 62 | **MAIN ROTOR**<br>**NOTE**<br>The mast nut torque is thought to be stable when two subsequent torque checks are successful (no turning of the mast nut). | | |
| TB 206L-07-223 | **1.** Torque check main rotor mast nut 250 to 275 foot-pounds (339 to 372 Nm) (TB 206L-07-223).<br>**2.** After completion of the first 1 to 5 hours torque check as per step 1, do a second torque check of the main rotor mast nut 250 to 275 foot-pounds (339 to 372 Nm) within 15 minutes to 5 hours of flight.<br>**3.** Once the mast nut is stable proceed as follows:<br>**a.** Clean the surface of the flap restraint support adjacent to the mast nut, the mast nut serrations and the mast nut lock with a clean cloth wet with acetone (C-316), MEK (C-309) or equivalent.<br>**b.** Apply a bead of sealant (C-251) to the mating edge of the mast nut serrations and the flap restraint support. Do not allow sealant into the mast nut lock bolt threaded hole in the flat restraint support. | | |

## SCHEDULED INSPECTIONS

### 5-45. 1 TO 5 HOURS AFTER EACH INSTALLATION (CONT)

| DATA REFERENCE | INSPECTION TASK DESCRIPTION | INITIAL MECH | INITIAL OTHER |
|---|---|---|---|
| | **c.** While the sealant is wet install the mast nut lock (Chapter 62).<br><br>**d.** Smooth the sealant to prevent moisture in any areas. | | |

# SPECIAL INSPECTIONS

## 5-46. 3 TO 8 HOURS AFTER EACH INSTALLATION

| DATA REFERENCE | INSPECTION TASK DESCRIPTION | INITIAL MECH | INITIAL OTHER |
|---|---|---|---|
| | **DATE: _____ W.O. _____**<br>**FACILITY: _____**<br>**HELICOPTER S/N: _____**<br>**REGISTRY NO.: _____**<br>**TOTAL TIME: _____**<br>**SIGNATURE: _____** | | |
| BHT-206L-CR&O | **MAIN ROTOR**<br>Torque check pillow block retention bolts/nuts 84 to 107 inch-pounds (9.4 to 12 Nm).<br>Check for misalignment of anti-slippage marks. | | |

# SPECIAL INSPECTIONS

## 5-47. 10 TO 25 HOURS AFTER EACH INSTALLATION

| DATA REFERENCE | INSPECTION TASK DESCRIPTION | INITIAL MECH | INITIAL OTHER |
|---|---|---|---|
| | **DATE: _____ W.O. _____**<br>**FACILITY: _____**<br>**HELICOPTER S/N: _____**<br>**REGISTRY NO.: _____**<br>**TOTAL TIME: _____**<br>**SIGNATURE: _____** | | |
| | **SWASHPLATE ASSEMBLY** | | |
| Chapter 62 | Check swashplate tilt friction. Value must be between 15 to 32 pounds (67 to 142 N). If not within limits, adjust to 15 to 32 pounds (67 to 142 N). Check tilt friction every 10 to 25 hours until it is stabilized. | | |
| Chapter 65 | **DISC PACK COUPLING**<br>Torque check disc pack coupling attaching hardware as follows:<br>**1.** Apply the minimum torque required for the fasteners. If the fasteners do not move, the check is completed. Check torque seal (C-049) and apply as required.<br>**2.** If the fastener(s) moved, do the steps that follow:<br>**a.** Remove the affected disc pack coupling and examine the bolts, nuts (minimum tare torque, refer to BHT-ALL-SPM) and washer for condition. Discard damaged parts.<br>**b.** Examine the disc pack coupling for condition. Discard damaged disc pack coupling.<br>**c.** Install the removed disc pack coupling and repeat torque check after 10 to 25 hours, until the torque is stabilized. Re-apply torque seal (C-049) as required. | | |

# SPECIAL INSPECTIONS

## 5-47. 10 TO 25 HOURS AFTER EACH INSTALLATION (CONT)

| DATA REFERENCE | INSPECTION TASK DESCRIPTION | INITIAL MECH | INITIAL OTHER |
|---|---|---|---|
| Chapter 65 | **TAIL ROTOR GEARBOX**<br><br>Torque check tail rotor gearbox retaining nuts 50 to 70 inch-pounds (5.6 to 7.9 Nm). Repeat every 10 to 25 hours until torque has stabilized. | | |

# SPECIAL INSPECTIONS

## 5-48. 100 HOURS AFTER EACH INSTALLATION

| DATA REFERENCE | INSPECTION TASK DESCRIPTION | INITIAL MECH | INITIAL OTHER |
|---|---|---|---|
| | **DATE:** _____ **W.O.** _____<br>**FACILITY:** _____<br>**HELICOPTER S/N:** _____<br>**REGISTRY NO.:** _____<br>**TOTAL TIME:** _____<br>**SIGNATURE:** _____ | | |
| | **POWER PLANT** | | |
| Chapter 71 | **1.** Torque check engine mount attachment hardware at engine and airframe attachment points.<br><br>**2.** If fastener is improperly torqued:<br><br>**a.** Check nuts tare torque, and bolt threads and shanks for damage.<br><br>**b.** Check engine mounts and supporting structure for damage.<br><br>**c.** Install new fastener if required, and apply torque. Recheck torque at next 100 hours. | | |
| | **TAILBOOM** | | |
| Chapter 53 | Torque check tailboom attachment nuts 375 to 415 inch-pounds (42.4 to 46.8 Nm). | | |
| | **TRANSMISSION** | | |
| Chapter 63 | **1.** Replace oil filter element and oil. Inspect removed element for metal particles. If particles are found, investigate to determine cause. | | |

# SPECIAL INSPECTIONS

## 5-48. 100 HOURS AFTER EACH INSTALLATION (CONT)

| DATA REFERENCE | INSPECTION TASK DESCRIPTION | INITIAL MECH | INITIAL OTHER |
|---|---|---|---|
| | **NOTE**<br>If a nut is improperly torqued, remove and check tare torque, and replace as required. Recheck torque at next 100 hours. | | |
| | **2.** Torque check transmission top case stud nuts 130 to 160 inch-pounds (15 to 18 Nm). | | |
| BHT-ALL-SPM | **3.** Touch up paint finish as required. | | |

# SPECIAL INSPECTIONS

## 5-48A. FREEWHEEL LUBRICATION SYSTEM

| DATA REFERENCE | INSPECTION TASK DESCRIPTION | INITIAL MECH | INITIAL OTHER |
|---|---|---|---|
| | **DATE:** _____ **W.O.** _____<br>**FACILITY:** _____<br>**HELICOPTER S/N:** _____<br>**REGISTRY NO.:** _____<br>**TOTAL TIME:** _____<br>**SIGNATURE:** _____<br><br>This special inspection is required to ensure that there is no debris or blockage of restrictors 406-040-623-101 and 406-040-624-101 located on the left side of the forward engine firewall. Blockage of the restrictor could cause the freewheel assembly to malfunction.<br><br>**FREEWHELL OIL SUPPLY SYSTEM FILTER (50-075-1) AND RESTRICTORS (406-040-623-101 AND 406-040-624-101).**<br><br>**WARNING**<br><br>THE FREEWHEEL OIL SUPPLY SYSTEM INSPECTION MUST BE DONE AFTER ANY OF THE FOLLOWING EVENTS:<br>• Anytime the freewheel oil supply is opened upstream of the restrictor.<br>• The disconnection, replacement, or reconnection of any fitting, hose or component between restrictor 406-040-623-101 and 406-040-624-101, and filter 50-075-1. | | |
| Chapter 63<br>ASB 206-14-174 | **1.** After the post installation and installation leak check, do an inspection and clean the components that follow as per ASB 206L-14-174: | | |

# SPECIAL INSPECTIONS

## 5-48A. FREEWHEEL LUBRICATION SYSTEM(CONT)

| DATA REFERENCE | INSPECTION TASK DESCRIPTION | INITIAL MECH | INITIAL OTHER |
|---|---|---|---|
| | • Filter (P/N 50-075-1)<br>• Restrictor (P/N 406-040-623-101 and 406-040-624-101). | | |

# CONDITIONAL INSPECTIONS

## 5-49. CONDITIONAL INSPECTIONS

Accomplish the applicable conditional inspections (paragraph 5-50 through paragraph 5-57) of the helicopter after the following:

- Hard landing
- Sudden stoppage/acceleration — Main rotor
- Sudden stoppage/acceleration — Tail rotor
- Overspeed — Main rotor — 114% or greater
- Overtorque
- Engine compressor stall or surge
- Lightning strike
- Engine overtemp

# CONDITIONAL INSPECTIONS

## 5-50. HARD LANDING

| DATA REFERENCE | INSPECTION TASK DESCRIPTION | INITIAL MECH | INITIAL OTHER |
|---|---|---|---|
| | **DATE:** _____ **W.O.** _____<br>**FACILITY:** _____<br>**HELICOPTER S/N:** _____<br>**REGISTRY NO.:** _____<br>**TOTAL TIME:** _____<br>**SIGNATURE:** _____<br><br>**HARD LANDING**<br><br>A hard landing is defined as any incident in which the impact of the helicopter with the ground causes severe pitching of the main rotor. Blades involved in this type of hard landing must be thoroughly inspected visually. If no obvious damage is discovered, the blades may be retained in service for continued usage.<br><br>If, on a hard landing, either main rotor blade comes in contact with the ground, tailboom, or other foreign object, both main rotor blades are to be regarded as having been involved in a sudden stoppage and must be returned to a Bell Helicopter Textron approved blade repair station for inspection.<br><br>The airframe landing skids and crosstubes will deform and yield under load forces in excess of 2.5 G's. If the cabin fuselage contacts the ground, the G forces in the fuselage increase abruptly. If, following a hard landing, the cabin fuselage is resting on the ground or shows evidence of having touched the ground, it is considered to have sustained a 10 G load.<br><br>If on a hard landing the shear pin in the elevator control tube (206-001-098) is sheared, the eyebolt (206-001-902) that retains the elevator control tube (206-001-098) to torque tube (206-001-306) must be replaced as well as the elevator control tube (206-001-098). | | |

# CONDITIONAL INSPECTIONS

## 5-50. HARD LANDING (CONT)

| DATA REFERENCE | INSPECTION TASK DESCRIPTION | INITIAL MECH | INITIAL OTHER |
|---|---|---|---|
| Rolls-Royce 250-C30 Series Operation and Maintenance Manual, 14W2 | **NOTE**<br>Components removed from helicopter for evaluation following a hard landing shall be evaluated as an interrelated group. Removal records accompanying each component shall cross-reference part and serial numbers of other drive system components removed for evaluation.<br><br>**1.** Inspect landing gear skid tubes and crosstubes for damage and deflection.<br><br>**2.** Inspect crosstube attachment points on the fuselage for damage or distortion.<br><br>**3.** Check all cowling, fairing, and doors for proper fit and alignment. Misaligned cowling, fairing, or doors may indicate a distorted fuselage, resulting in major stresses and damage to components.<br><br>**4.** Remove all cowlings and fairings necessary to perform a complete visual inspection.<br><br>**5.** Engine. Refer to the Rolls-Royce Maintenance Manual for inspection instructions.<br><br>**6.** Check for leaks in the hydraulic system, interference or binding of hydraulic actuator and controls, and for satisfactory operation.<br><br>**7.** Perform complete visual inspection of the flight control system from pilot controls to main rotor head and check for bent or damaged tubes, bellcranks, and supports. Particular attention should be given to the pitch link assemblies swaged ends for cracks and to swashplate pivot sleeve at the lever attachment points for damage. | | |

# CONDITIONAL INSPECTIONS

## 5-50. HARD LANDING (CONT)

| DATA REFERENCE | INSPECTION TASK DESCRIPTION | INITIAL MECH | INITIAL OTHER |
|---|---|---|---|
| | **a.** Remove and inspect suspected control tube for straightness by rolling on a surface plate or with use of a metal straight edge. On fixed control tubes the swaged end must be concentric to tube within 0.06 inch (1.5 mm) Total Indicated Runout (TIR). Scrap damaged control tube. If no damage is found, reinstall control tube. | | |
| BHT-206L-CR&O | **b.** If visual inspection reveals damage to the swashplate and support assembly, accomplish the following:<br><br>**(1)** Overhaul swashplate and support assembly.<br><br>**(2)** Accomplish an overhaul of main rotor hub assembly in accordance with the Conditional Inspection criteria.<br><br>**(3)** Overhaul drive collar, link, and lever.<br><br>**(4)** Overhaul all connecting control tubes and scrap all connecting control bolts. | | |
| BHT-ALL-SPM | **c.** Inspect all bearings for smoothness and axial and radial play.<br><br>**8.** Inspect structure with a 10X magnifying glass around the transmission mounting points. Particular attention should be given to the transmission restraint system and transmission mount stops for sheared bolts, damaged drag pins, and supports.<br><br>**9.** Inspect transmission pylon link assemblies for contact with nodal beam up stop and bolt head.<br><br>**10.** Inspect surrounding structure for contact with main driveshaft.<br><br>**11.** Inspect cabin roof shell and beam supporting the transmission mount support assemblies for cracks or deformation.<br><br>**12.** Inspect transmission up and down stops for deformation and loss of attachment nut torque.<br><br>**13.** Inspect the transmission restraint and stop mounts for damage. | | |

# CONDITIONAL INSPECTIONS

## 5-50. HARD LANDING (CONT)

| DATA REFERENCE | INSPECTION TASK DESCRIPTION | INITIAL MECH | INITIAL OTHER |
|---|---|---|---|
| BHT-206L-CR&O | **14.** If one or more of the inspection requirements in step 9 through step 13 reveals an unsatisfactory condition, a mast run out inspection must be performed.<br><br>**15.** If damage in any of the inspection requirements of step 9 through step 14 is noted, the main rotor hub assembly must be inspect and repair in accordance with the Conditional Inspection criteria.<br><br>**16.** Inspect mast for indentions caused by static stop(s). If mast is damaged from an excessively hard contact with main rotor static stop, scrap mast pole. Remove and inspect the following components to ensure airworthiness:<br><br>**a.** Main rotor hub assembly in accordance with the Conditional Inspection criteria.<br><br>**b.** Transmission assembly.<br><br>**c.** Main driveshaft assembly. Remove and examine the driveshaft for deformation and cracks. If deformation or cracks are found, discard the driveshaft.<br><br>**d.** Transmission restraint.<br><br>**e.** Remove main rotor blades and send to a Bell Helicopter Textron approved blade repair facility for evaluation.<br><br>**17.** Inspect engine mounts at fuselage attachment points for cracks.<br><br>**18.** Inspect tail boom for contact with main rotor blades. If damage is found, accomplish main rotor sudden stoppage inspection.<br><br>**19.** Inspect oil cooler blower shaft for straightness, and impeller and shaft assembly for balance.<br><br>**20.** Inspect tail rotor blades for damage. If damage is found, accomplish tail rotor sudden stoppage inspection. | | |

# CONDITIONAL INSPECTIONS

## 5-50. HARD LANDING (CONT)

| DATA REFERENCE | INSPECTION TASK DESCRIPTION | INITIAL MECH | INITIAL OTHER |
|---|---|---|---|
| BHT-206L-CR&O | **21.** Inspect tail skid tube and mounting for damage. Inspect tailboom internally and externally for cracks, distortion, and sheared or loose rivets. Inspect the tailboom attachment points for elongated bolt holes and damaged structure.<br><br>**22.** Inspect fuel and oil systems for damage. During ground-run, check fuel and oil systems for leaks.<br><br>**23.** If damage to fuselage structure or tailboom is such that a major repair alignment in a fixture is required, or if landing gear crosstubes permanent set exceeds limits, remove and overhaul the following components:<br><br>**a.** Main rotor hub assembly in accordance with the Conditional Inspection criteria.<br><br>**b.** Swashplate and support assembly, with drive collar, link, and lever.<br><br>**c.** All control tubes.<br><br>**d.** Main rotor pitch link assemblies.<br><br>**e.** Transmission and mast assembly.<br><br>**f.** Freewheel assembly.<br><br>**g.** Tail rotor driveshaft assembly.<br><br>**h.** Tail rotor gearbox.<br><br>**i.** Tail rotor hub and blade assembly.<br><br>**j.** Transmission restraint and mount systems.<br><br>**k.** Remove main rotor blades and send to a Bell Helicopter Textron approved blade repair facility for evaluation.<br><br>**l.** Replace all control bolts from hydraulic servo actuator to the main rotor hub.<br><br>**m.** Main driveshaft must be considered unserviceable and scrapped. | | |

# CONDITIONAL INSPECTIONS

## 5-50. HARD LANDING (CONT)

| DATA REFERENCE | INSPECTION TASK DESCRIPTION | INITIAL MECH | INITIAL OTHER |
|---|---|---|---|
| BHT-206L4-FM-1 | **24.** Provided no visual damage is found, start engine and check main rotor for evidence of 1/rev vibration and lateral balance while at flat pitch. | | |

# CONDITIONAL INSPECTIONS

## 5-51. SUDDEN STOPPAGE/ACCELERATION — MAIN ROTOR

| DATA REFERENCE | INSPECTION TASK DESCRIPTION | INITIAL MECH | INITIAL OTHER |
|---|---|---|---|
| | **DATE:** _____ **W.O.** _____<br>**FACILITY:** _____<br>**HELICOPTER S/N:** _____<br>**REGISTRY NO.:** _____<br>**TOTAL TIME:** _____<br>**SIGNATURE:** _____<br><br>**SUDDEN STOPPAGE/ACCELERATION**<br><br>Sudden stoppage/acceleration is defined as any rapid deceleration or acceleration of the drive system whether caused by seizure within the drive system, sudden freewheel clutch engagement, or impact of the main rotor with the ground or with a foreign object of sufficient inertia to cause rapid deceleration.<br><br>**NOTE**<br>Components removed from helicopter for evaluation following a sudden stoppage/acceleration shall be evaluated as an interrelated group. Removal records accompanying each component shall cross-reference part and serial numbers of other drive system components removed for evaluation.<br><br>**1.** After sudden stoppage, inspect main rotor blades as follows:<br><br>**a.** Remove tip cover plate from both main rotor blades.<br><br>**b.** Inspect blade skin and bonded doublers for visible damage.<br><br>**c.** Check tip weights. If any movement of tip weights has occurred, blade shall be scrapped. | | |

# CONDITIONAL INSPECTIONS

## 5-51. SUDDEN STOPPAGE/ACCELERATION — MAIN ROTOR (CONT)

| DATA REFERENCE | INSPECTION TASK DESCRIPTION | INITIAL MECH | INITIAL OTHER |
|---|---|---|---|
| | **2.** After sudden stoppage of the main rotor, remove both main rotor blades. Send blades to a Bell Helicopter Textron approved blade repair facility for evaluation.<br><br>**3.** Remove the following components and visually inspect for evidence of torsional yielding, deformation, cracks, or other obvious damage that would render them non-repairable. Conduct an overhaul of these components.<br><br>**NOTE**<br>If main rotor mast was severed during main rotor sudden stoppage/acceleration, the main rotor hub assembly must be considered unserviceable and scrapped. | | |
| BHT-206L-CR&O | **a.** Main rotor hub assembly in accordance with the Conditional Inspection criteria.<br><br>**NOTE**<br>If main rotor mast was severed during a main rotor sudden stoppage/acceleration with the engine operating, the main rotor mast has sustained torsional yielding. | | |
| BHT-206A/B/L-Series-CR&O | **b.** Mast assembly.<br><br>**(1)** Concurrently with mast assembly overhaul, accomplish the following inspections:<br><br>**(a)** Do a Total Indicated Runout (TIR) of the main rotor mast. | | |

# CONDITIONAL INSPECTIONS

## 5-51. SUDDEN STOPPAGE/ACCELERATION — MAIN ROTOR (CONT)

| DATA REFERENCE | INSPECTION TASK DESCRIPTION | INITIAL MECH | INITIAL OTHER |
|---|---|---|---|
| | **CAUTION**<br>IF MAIN ROTOR MAST HAS EVIDENCE OF TORSIONAL YIELDING, THE MAST ASSEMBLY, TRANSMISSION ASSEMBLY, MAIN DRIVESHAFT, AND FREEWHEEL ASSEMBLY (OUTER RACE, INNER RACE, AND CLUTCH) SHALL BE CONSIDERED UNSERVICEABLE AND SCRAPPED. MAJOR DAMAGE TO THE MAST ASSEMBLY OTHER THAN TORSIONAL YIELDING REQUIRES REPLACEMENT OF TRANSMISSION TOP CASE. IF TRANSMISSION TOP CASE HAS TO BE SCRAPPED, PYLON MOUNT SPINDLES AND MAST BEARINGS SHALL ALSO BE SCRAPPED. | | |
| | **(b)** Torsional yielding may be detected by measuring the offset between the mast splines above and below the main rotor trunnion split cone groove using either of the following methods: | | |
| | **i.** Sliding a 0.1600 inch (4.06 mm) diameter measuring pin across the upper and lower spline. | | |
| | **ii.** Sliding a straight edge across the upper and lower unworn face of the spline (coast side of the spline). | | |
| BHT-206L-CR&O | **c.** Transmission assembly. | | |
| | **d.** Swashplate assembly. | | |
| | **NOTE**<br>Replace all control bolts from hydraulic servo actuators to main rotor hub. | | |
| | **e.** All cyclic and collective control tubes from mixing lever to swashplate. | | |
| | **f.** Main rotor pitch link assemblies. | | |
| | **g.** Freewheel assembly. | | |

# CONDITIONAL INSPECTIONS

## 5-51. SUDDEN STOPPAGE/ACCELERATION — MAIN ROTOR (CONT)

| DATA REFERENCE | INSPECTION TASK DESCRIPTION | INITIAL MECH | INITIAL OTHER |
|---|---|---|---|
| BHT-206L-CR&O | **h.** Main driveshaft must be considered unserviceable and scrapped.<br><br>**i.** Inspect transmission restraint and transmission mount system for condition, and fuselage attachment points for cracks.<br><br>**j.** Inspect engine mounts at fuselage attachment points for cracks.<br><br>**NOTE**<br><br>If a tail rotor driveshaft failed as a result of torsional overload, ALL hangers, driveshafts, adapters, impellers, and disc couplings shall be considered unserviceable and scrapped. Inspect hanger attachment points for cracks and distortion. Overhaul tail rotor gearbox to ensure airworthiness.<br><br>If a tail rotor driveshaft has been damaged by main rotor strike or damage other than torsional overload, ALL bonded tail rotor driveshafts, plus the hanger assemblies, adapters, and disc couplings fore-and-aft of the damaged area shall be considered unserviceable and scrapped. Inspect remaining hanger assemblies, adapters, and disc couplings according to step l and step m. Inspect hanger attachment points for cracks and distortion.<br><br>**k.** Inspect tail rotor driveshafts for out of roundness, and distortion or bowing exceeding the limits specified. If any defect is detected, scrap all bonded tail rotor driveshafts.<br><br>**l.** Inspect steel tail rotor driveshaft and all steel adapters for cracks using magnetic particle inspection method.<br><br>**m.** Inspect tail rotor driveshaft hangers, disc couplings, and aluminum driveshaft adapters using fluorescent penetrant inspection method.<br><br>**4.** In addition to step l, step m, and related notes, all bonded tail rotor driveshafts shall be considered unserviceable and scrapped, if during a sudden stoppage/acceleration inspection any of the following conditions that are attributable to the sudden stoppage/acceleration are noted: | | |

# CONDITIONAL INSPECTIONS

## 5-51. SUDDEN STOPPAGE/ACCELERATION — MAIN ROTOR (CONT)

| DATA REFERENCE | INSPECTION TASK DESCRIPTION | INITIAL MECH | INITIAL OTHER |
|---|---|---|---|
| | **a.** Any impact damage to a main rotor blade leading edge or lower skin, or any main rotor blade skin buckling or tears.<br><br>**b.** If main rotor mast is sheared, power on or off, or with torsional yielding, or TIR check exceed limits.<br><br>**c.** Any deformation of any coupling disc that results in gaps between laminates greater than 0.015 inch (0.381 mm).<br><br>**d.** Structural failure or distortion of any coupling disc bolts.<br><br>**e.** Structural failure, or distortion exceeding the specified limits of the tail rotor driveshaft steel or aluminum adapters. | | |
| Rolls-Royce 250-C30 Series Operation and Maintenance Manual, 14W2 | **5.** Refer to the Rolls-Royce 250-C30 Series Operation and Maintenance Manual, 14W2 for sudden stoppage inspection requirements. | | |

# CONDITIONAL INSPECTIONS

## 5-52. SUDDEN STOPPAGE/ACCELERATION — TAIL ROTOR

| DATA REFERENCE | INSPECTION TASK DESCRIPTION | INITIAL MECH | INITIAL OTHER |
|---|---|---|---|
| | **DATE:** _____ **W.O.** _____<br>**FACILITY:** _____<br>**HELICOPTER S/N:** _____<br>**REGISTRY NO.:** _____<br>**TOTAL TIME:** _____<br>**SIGNATURE:** _____ | | |
| BHT-ALL-SPM | **SUDDEN STOPPAGE/ACCELERATION**<br>Sudden stoppage is defined as any rapid deceleration or acceleration of the drive system whether caused by seizure within the helicopter drive system, sudden freewheel clutch engagement, or by contact of tail rotor blade(s) with the ground, water, or with a foreign object of sufficient inertia to cause rapid deceleration.<br>**CAUTION**<br>DAMAGE TO TAIL ROTOR BLADE ASSEMBLY COULD BE PRESENT ALTHOUGH IT MAY NOT BE READILY DETECTED BY STANDARD VISUAL, DIMENSIONAL, AND MAGNETIC PARTICLE OR FLUORESCENT PENETRANT INSPECTION METHODS.<br>**NOTE**<br>Components removed from helicopter for evaluation following a sudden stoppage/acceleration shall be evaluated as an interrelated group. Removal records accompanying each component shall cross-reference part and serial numbers of other drive system components removed for evaluation.<br>**1.** Remove and scrap tail rotor hub and blade assembly. | | |

# CONDITIONAL INSPECTIONS

## 5-52. SUDDEN STOPPAGE/ACCELERATION — TAIL ROTOR (CONT)

| DATA REFERENCE | INSPECTION TASK DESCRIPTION | INITIAL MECH | INITIAL OTHER |
|---|---|---|---|
| | **2.** Overhaul the following components:<br><br>**a.** Tail rotor gearbox assembly.<br><br>**b.** Freewheel assembly.<br><br>**c.** Tail rotor pitch change mechanism. | | |
| BHT-ALL-SPM<br>BHT-206L-CR&O | **3.** Inspect all tail rotor driveshafts, impeller, steel and aluminum adapters, flexible coupling discs, and hangers using magnetic particle or fluorescent penetrant methods, whichever is applicable.<br><br>**4.** Visually inspect shafts for evidence of twisting, and check for out of round and Total Indicated Runout (TIR) exceeding specified limits. Inspect the bonds between the tail rotor driveshaft and bonded adapter for integrity. If any defect is detected, scrap all bonded tail rotor driveshafts.<br><br>**5.** Inspect tail rotor hanger support at tailboom and fuselage attachment points for cracks.<br><br>**6.** Inspect tail rotor hanger supports for cracks and distortion. | | |
| BHT-206L-CR&O | **NOTE**<br><br>If tail rotor driveshaft failed as a result of torsional overload, ALL hangers, driveshafts, adapters, impeller, and disc couplings shall be considered unserviceable and scrapped. Inspect hanger attachment points for cracks and distortion. Ensure airworthiness of tail rotor gearbox by conducting a major overhaul.<br><br>If a tail rotor driveshaft has been damaged by main rotor strike or damage other than torsional overload, ALL bonded tail rotor driveshafts, plus the hanger assemblies, adapter, and disc couplings fore and aft of the damaged area shall be considered unserviceable and scrapped. Inspect remaining hanger assemblies, adapters, and disc couplings using the magnetic particle or fluorescent penetrant inspection, whichever is applicable, for cracks and distortion. | | |

# CONDITIONAL INSPECTIONS

## 5-52. SUDDEN STOPPAGE/ACCELERATION — TAIL ROTOR (CONT)

| DATA REFERENCE | INSPECTION TASK DESCRIPTION | INITIAL MECH | INITIAL OTHER |
|---|---|---|---|
| | **7.** In addition ALL bonded tail rotor driveshafts shall be considered unserviceable and scrapped, if during a sudden stoppage inspection any of the following conditions that are attributable to the sudden stoppage are noted:<br><br>**a.** Any impact damage to a tail rotor blade leading edge or skin, or any tail rotor blade skin buckling or tearing.<br><br>**b.** Any deformation of any coupling discs that result in gaps between laminates greater than 0.015 inch (0.381 mm).<br><br>**c.** Structural failure or distortion of any coupling disc bolts.<br><br>**d.** Structural failure or distortion exceeding the specified limits of the tail rotor driveshaft steel or aluminum adapters.<br><br>**8.** Inspect tailboom area of tail rotor gearbox mounting studs and dowel pins for cracks using a 10X magnifying glass or fluorescent penetrant method of inspection.<br><br>**9.** Inspect the four tailboom attachment points for cracks, distortion damage, and security. Check torque on nuts of tailboom attachment bolts.<br><br>**10.** Inspect tailboom internally for cracks, distortion, and loose or missing rivets. Check external skin of tailboom for cracks paying particular attention to area of horizontal stabilizer and attachment points of vertical fin.<br><br>**11.** Inspect horizontal stabilizer and finlets for cracks and overall condition. | | |
| BHT-206L-CR&O | **12.** Inspect vertical fin for security and overall condition. Check tail skid for condition and security. Check mounting of anticollision light for security and condition. | | |
| Rolls-Royce 250-C30 Series Operation and Maintenance Manual, 14W2 | **13.** Refer to the Rolls-Royce 250-C30 Series Operation and Maintenance Manual, 14W2 for sudden stoppage inspection requirements. | | |

# CONDITIONAL INSPECTIONS

## 5-53. OVERSPEED MAIN ROTOR — 114% OR GREATER

| DATA REFERENCE | INSPECTION TASK DESCRIPTION | INITIAL MECH | INITIAL OTHER |
|---|---|---|---|
| | **DATE:** _____ **W.O.** _____<br>**FACILITY:** _____<br>**HELICOPTER S/N:** _____<br>**REGISTRY NO.:** _____<br>**TOTAL TIME:** _____<br>**SIGNATURE:** _____<br><br>**OVERSPEED MAIN ROTOR — 114% OR GREATER**<br><br>**NOTE**<br>Components removed from a helicopter for evaluation following an overspeed shall be evaluated as an interrelated group. Removal records accompanying each component shall cross-reference part and serial numbers of other drive system components removed for evaluation.<br><br>For main rotor overspeeds above 107% and up to 114%, visually inspect main rotor blades and tail rotor blades for skin wrinkles or damage. If damage or wrinkles are detected, accomplish complete overspeed inspection.<br><br>**1.** If the main rotor overspeeds in excess of 114% RPM, proceed with the following:<br><br>**a.** Discarding of the following items is mandatory:<br><br>**(1)** Tension/torsion straps.<br><br>**(2)** Inboard strap fittings and pins.<br><br>**(3)** Latch bolts.<br><br>**b.** Main rotor blades. | | |

# CONDITIONAL INSPECTIONS

## 5-53. OVERSPEED MAIN ROTOR — 114% OR GREATER (CONT)

| DATA REFERENCE | INSPECTION TASK DESCRIPTION | INITIAL MECH | INITIAL OTHER |
|---|---|---|---|
| | **(1)** Dimensionally check main rotor blade retention bolt hole for indications of permanent deformation or damage. If inside diameter of bushing in the hole is elongated in excess of 0.0015 inch (0.0381 mm), remove blade from service and return it to a Bell Helicopter Textron approved major overhaul facility for further inspection. Any evident looseness of bushing is cause for scrapping blade.<br><br>**(2)** Remove tip cap assembly from main rotor blade and inspect tip cap attaching screws for deformation. Any deformation of screws or elongation of mating holes in the spar is cause for scrapping blade.<br><br>**(3)** Visually inspect main rotor blade for skin wrinkles or deformation. If any indication of wrinkles or deformation exists, return blade to a Bell Helicopter Textron approved major overhaul facility for evaluation.<br><br>**(4)** If main rotor blades pass the previous inspection, they are acceptable for continued service.<br><br>**c.** Tail rotor blades.<br><br>**(1)** If one of the tail rotor blades of a pair has been damaged badly enough that metal has been torn or any bond plies have separated, then both blades and tail rotor hub must be scrapped.<br><br>**(2)** If contour of a blade has been damaged slightly (distortion) then both blades and tail rotor hub must be scrapped.<br><br>**(3)** If any movement of the tip block or root end balance weights has occurred, scrap tail rotor hub assembly and both tail rotor blades.<br><br>**(4)** If tip block is cracked, scrap tail rotor hub assembly and both tail rotor blades.<br><br>**(5)** If tail rotor blades pass the above inspection requirements and no other discrepancies exist, the blades are acceptable for continued service. | | |

# CONDITIONAL INSPECTIONS

## 5-53. OVERSPEED MAIN ROTOR — 114% OR GREATER (CONT)

| DATA REFERENCE | INSPECTION TASK DESCRIPTION | INITIAL MECH | INITIAL OTHER |
|---|---|---|---|
| BHT-206L-CR&O | **d.** Overhaul the main rotor hub assembly in accordance with the Conditional Inspection criteria. | | |
| BHT-206A/B/L-Series-CR&O, Chapter 64 | **e.** Overhaul the tail rotor hub assembly. | | |
| BHT-ALL-SPM | **f.** Inspect oil cooler fan impeller for visible distortion or cracks of the brazed vane joints using dye penetrant inspection method. | | |
| Rolls-Royce 250-C30 Series Operation and Maintenance Manual, 14W2 | **2.** Engine. Refer to the Rolls-Royce 250-C30 Series Operation and Maintenance Manual, 14W2. | | |

# CONDITIONAL INSPECTIONS

## 5-54. OVERTORQUE

| DATA REFERENCE | INSPECTION TASK DESCRIPTION | INITIAL MECH | INITIAL OTHER |
|---|---|---|---|
| | **DATE:** _____ **W.O.** _____<br>**FACILITY:** _____<br>**HELICOPTER S/N:** _____<br>**REGISTRY NO.:** _____<br>**TOTAL TIME:** _____<br>**SIGNATURE:** _____<br><br>**NOTE**<br>Torque Indicator Reference: 100% = 71.4 PSI, 110% = 78.5 PSI, 120% = 85.7 PSI.<br><br>**OVERTORQUE — 110 TO 120%**<br><br>**NOTE**<br>Components removed from a helicopter for evaluation following an overtorque shall be evaluated as an interrelated group. Removal records accompanying each component shall cross-reference part and serial numbers of other drive system components removed for evaluation.<br><br>**NOTE**<br>If overtorque above 100% up to 110% should occur, no inspection is required.<br><br>**1.** If overtorque above 110% up to 120% should occur, perform the following:<br><br>**a.** Conduct a visual inspection of the following listed assemblies (installed on the helicopter) for any evidence of damage, deformation, yielding, etc. | | |

# CONDITIONAL INSPECTIONS

## 5-54. OVERTORQUE (CONT)

| DATA REFERENCE | INSPECTION TASK DESCRIPTION | INITIAL MECH | INITIAL OTHER |
|---|---|---|---|
| | **(1)** Main rotor blades and attachments. Blade for skin wrinkles and bond separation. If any indications of wrinkles or deformation exists, send blades to a Bell Helicopter Textron approved blade repair facility for evaluation.<br><br>**(2)** Main rotor hub assembly.<br><br>**(3)** Transmission top case.<br><br>**(4)** Transmission mount fittings at upper attachment points and lower stop mounts.<br><br>**(5)** Cabin roof and beam at transmission restraint support assembly attachment points.<br><br>**(6)** Cabin roof and beam at nodal beam support attachment points.<br><br>**(7)** Tail rotor hub, blades, and attachments.<br><br>**b.** Examine the transmission electric chip detectors for accumulated material.<br><br>**c.** Remove and examine the engine-to-transmission driveshaft for deformation and cracks. If deformation, cracks, or other damage is found, discard the driveshaft.<br><br>**CAUTION**<br><br>A QUALIFIED PERSON MUST BE AT THE HELICOPTER CONTROLS DURING THE FOLLOWING PROCEDURE. | | |
| BHT-206L4-FM-1 | **d.** Start engine and check main rotor, while in a flat pitch condition, for any evidence of a 1/rev vibration or lateral vibration. | | |
| BHT-206A/B/L-Series-CR&O, Chapter 63 | **e.** If one or more of the previous inspection requirements, step a through step d, reveals an unsatisfactory condition, a mast runout inspection shall be performed. | | |

# CONDITIONAL INSPECTIONS

## 5-54. OVERTORQUE (CONT)

| DATA REFERENCE | INSPECTION TASK DESCRIPTION | INITIAL MECH | INITIAL OTHER |
|---|---|---|---|
| Rolls-Royce 250-C30 Series Operation and Maintenance Manual, 14W2 | **2.** Refer to the Rolls-Royce 250-C30 Series Operational and Maintenance Manual for applicable inspection.<br><br>**3.** After the first 25 hours following an overtorque, conduct a thorough visual inspection of the following:<br><br>**a.** Main rotor blades and attachments.<br><br>**b.** Main rotor hub assembly.<br><br>**c.** Main rotor mast.<br><br>**d.** Transmission top case.<br><br>**e.** Transmission mount link assemblies, link attachments, and arm and support assemblies.<br><br>**f.** Cabin roof shell and beam at transmission mount attachment points.<br><br>**g.** Transmission restraint attachment at stop mounts, support, and cabin roof shell and beam.<br><br>**h.** Transmission electric chip detectors.<br><br>**i.** Tail rotor gearbox chip detector and gearbox attachments.<br><br>**j.** Tail rotor hub, blades, and attachments.<br><br>**OVERTORQUE — ABOVE 120%**<br><br>**NOTE**<br><br>Components removed from helicopter for evaluation following an overtorque shall be evaluated as an interrelated group. Removal records accompanying each component shall cross-reference part and serial numbers of other drive system components removed for evaluation. | | |

# CONDITIONAL INSPECTIONS

## 5-54. OVERTORQUE (CONT)

| DATA REFERENCE | INSPECTION TASK DESCRIPTION | INITIAL MECH | INITIAL OTHER |
|---|---|---|---|
| | **NOTE**<br>The overhaul inspection criteria in the specific sections, including limit charts and other pertinent information, should be used to establish that the detail parts in each assembly are dimensionally within limits and have not yielded or become deformed.<br><br>**1.** If an overtorque above 120% occurs, accomplish all inspections required for overtorque — 110 to 120% and in addition, conduct following inspection:<br><br>**a.** Main Rotor Hub. Remove and overhaul in accordance with the conditional inspection criteria.<br><br>**b.** Main Rotor Mast. Remove and overhaul.<br><br>**c.** Main Transmission. Remove and overhaul. Replace top case of main transmission and transmission link attachments. During overhaul, inspect gear patterns for shifting and scuffing.<br><br>**d.** Main driveshaft. Remove and visually inspect.<br><br>**e.** Freewheel assembly. Remove and overhaul. | | |
| Rolls-Royce 250-C30 Series Operation and Maintenance Manual, 14W2 | **2.** Refer to the Rolls-Royce 250-C30 Series Operation and Maintenance Manual, 14W2 for applicable inspection.<br><br>**3.** After the first 25 hours following an overtorque, conduct a thorough visual inspection of the following:<br><br>**a.** Main rotor blades and attachments.<br><br>**b.** Main rotor hub assembly.<br><br>**c.** Main rotor mast.<br><br>**d.** Transmission top case. | | |

# CONDITIONAL INSPECTIONS

## 5-54. OVERTORQUE (CONT)

| DATA REFERENCE | INSPECTION TASK DESCRIPTION | INITIAL MECH | INITIAL OTHER |
|---|---|---|---|
| | **e.** Transmission spindles, pylon support links, and mount fittings.<br><br>**f.** Cabin roof shell and beam at transmission mount attachment points.<br><br>**g.** Transmission restraint attachment.<br><br>**h.** Transmission electric chip detectors.<br><br>**i.** Tail rotor gearbox chip detectors and gearbox attachments.<br><br>**j.** Tail rotor hub, blades, and attachments. | | |

# CONDITIONAL INSPECTIONS

## 5-55. ENGINE COMPRESSOR STALL OR SURGE

| DATA REFERENCE | INSPECTION TASK DESCRIPTION | INITIAL MECH | OTHER |
|---|---|---|---|
| | **DATE:** _____ **W.O.** _____<br>**FACILITY:** _____<br>**HELICOPTER S/N:** _____<br>**REGISTRY NO.:** _____<br>**TOTAL TIME:** _____<br>**SIGNATURE:** _____<br><br>**NOTE**<br>An engine compressor stall or surge can be described as a sharp rumble, a series of loud sharp pops, severe engine vibration, or a rapid rise in Turbine Outlet Temperature (TOT) depending on the severity of stall or surge. When a stall or surge is suspected, follow steps as dictated by reported conditions.<br><br>**NOTE**<br>The components removed from the helicopter for evaluation following a compressor stall or surge shall be evaluated as a matched group. The records accompanying each component shall cross-reference part and serial numbers of other drive system components removed for evaluation.<br><br>**1.** Obtain a pilot's report of the circumstances related to the suspected compressor stall or surge to determine if it corresponds to one of the following conditions:<br><br>• If the stall or surge occurred on the ground or in flight at any $N_R$ speed or torque setting and there was no noticeable yaw of the helicopter, do Part I and Part II of this inspection. | | |

# CONDITIONAL INSPECTIONS

## 5-55. ENGINE COMPRESSOR STALL OR SURGE (CONT)

| DATA REFERENCE | INSPECTION TASK DESCRIPTION | INITIAL MECH | OTHER |
|---|---|---|---|
| | • If the stall or surge occurred on the ground or in flight at any $N_R$ speed or torque setting and there was a noticeable yaw of the helicopter, do Part I, Part II, and Part III of this inspection.<br><br>**PART I: INVESTIGATE CAUSE OF COMPRESSOR STALL OR SURGE**<br><br>**POWER PLANT** | | |
| Rolls-Royce 250-C30 Series Operation and Maintenance Manual, 14W2 | **1.** Examine the induction fairing for blockage. If the induction fairing is found obstructed, refer to the appropriate Rolls-Royce Operation and Maintenance Manual for further maintenance action. If no blockage is found, do step 2.<br><br>**2.** Remove the induction fairing and examine the compressor intake area as follows:<br><br>**a.** Examine the compressor rotor for contamination. If contamination is found, perform a compressor wash. Refer to applicable BHT-206L4-MM-9, Chapter 71.<br><br>**b.** Inspect compressor rotor for foreign object damage in accordance with the appropriate Rolls-Royce Operation and Maintenance Manual for proper action.<br><br>**3.** If step 1 and step 2 do not reveal an obvious cause for stall or surge, refer to the appropriate Rolls-Royce Operation and Maintenance Manual for further maintenance action. | | |

# CONDITIONAL INSPECTIONS

## 5-55. ENGINE COMPRESSOR STALL OR SURGE (CONT)

| DATA REFERENCE | INSPECTION TASK DESCRIPTION | INITIAL MECH | OTHER |
|---|---|---|---|
| Chapter 63<br>Chapter 65 | **NOTE**<br>Removal or dismantling of components is not required while performing the following inspection.<br><br>**PART II: INSPECTION FOR COMPRESSOR STALL OR SURGE WITHOUT NOTICEABLE YAW**<br><br>**DRIVE SYSTEM**<br><br>**1.** Examine the chip detectors of the transmission, freewheel assembly, and the tail rotor gearbox. If the chip detector shows signs of metal particles, perform a serviceability check. Components that fail the serviceability check shall be removed. Make an entry on the applicable components Historical Service Record and attach a tag and write, “THIS COMPONENT WAS REMOVED FROM SERVICE BECAUSE OF A COMPRESSOR STALL/SURGE”. Send the component to a Bell Helicopter Textron approved facility for overhaul.<br><br>**2.** Examine the tail rotor driveshafts for condition and security of attachment.<br><br>**3.** Examine the tail rotor disc pack couplings for cracks or gapping greater than 0.015 inch (0.38 mm).<br><br>**4.** Examine the tail rotor steel driveshaft and adapters for structural failure or distortion exceeding specified limits.<br><br>**5.** Examine the bond lines on all bonded tail rotor driveshaft adapters (if installed) for any evidence of cracks and voids.<br><br>**6.** If any defect is detected in step 2 through step 5, all bonded tail rotor driveshafts shall be considered unserviceable and discarded.<br><br>**7.** Examine the tail rotor driveshaft segments having riveted adapters (if installed) for condition.<br><br>**8.** Examine the oil cooler shaft and forward short shaft for condition.<br><br>**9.** Examine the engine-to-transmission main driveshaft for condition. | | |

# CONDITIONAL INSPECTIONS

## 5-55. ENGINE COMPRESSOR STALL OR SURGE (CONT)

| DATA REFERENCE | INSPECTION TASK DESCRIPTION | INITIAL MECH | OTHER |
|---|---|---|---|
| | **10.** If no defects were detected that may have been caused by the compressor stall or surge, all drivetrain components are serviceable. | | |
| Chapter 62 | **ROTATING CONTROL SYSTEM** | | |
| | **1.** Examine the swashplate and support assembly, swashplate drive components, the tail rotor pitch change mechanism, and all rotating controls (main and tail). Replace any unserviceable parts as necessary. | | |
| Chapter 64 | **TAIL ROTOR HUB AND BLADES** | | |
| BHT-206L-CR&O | **1.** Examine the tail rotor hub assembly for condition. If any damage suspected to be related to the stall or surge is found, remove the tail rotor hub assembly. Make an entry on the Historical Service Record and attach a tag on the tail rotor hub assembly and write, "THIS COMPONENT WAS REMOVED FROM SERVICE BECAUSE OF A COMPRESSOR STALL OR SURGE". Send the hub to an approved facility for overhaul. | | |
| | **2.** Examine the tail rotor blade(s) for condition. If any damage suspected to be related to the stall or surge is found, remove the tail rotor blade(s). Make an entry on the Historical Service Record and attach a tag on the tail rotor blade(s) and write "THIS BLADE WAS REMOVED FROM SERVICE BECAUSE OF A COMPRESSOR STALL OR SURGE". Send the tail rotor blade(s) assembly to a Bell Helicopter Textron approved rotor blade repair facility for further inspection and repair. | | |
| | **3.** Examine the tail rotor blade bolts for security of attachment. If damage suspected to be related to the stall or surge is found, discard them. | | |
| | **4.** If any defect is detected in step 1 through step 3, all bonded tail rotor driveshafts shall be considered unserviceable and discarded. | | |
| Chapter 62 | **MAIN ROTOR HUB AND BLADES** | | |
| | **1.** Examine the main rotor blades for damage. Check for wrinkled skin, delamination, deformation, and cracks. | | |

# CONDITIONAL INSPECTIONS

## 5-55. ENGINE COMPRESSOR STALL OR SURGE (CONT)

| DATA REFERENCE | INSPECTION TASK DESCRIPTION | INITIAL MECH | OTHER |
|---|---|---|---|
| BHT-206L-CR&O | **2.** If any blade has visible damage suspected to be related to the stall or surge, make an entry on the Historical Service Record and attach a tag on blades and write, "THIS BLADE WAS REMOVED FROM SERVICE BECAUSE OF A COMPRESSOR STALL/SURGE." Send the blade(s) to a Bell Helicopter Textron approved rotor blade repair facility for further inspection and repair.<br><br>**3.** If no defects were detected on any blade, the blade(s) are serviceable.<br><br>**NOTE**<br>This inspection does not require disassembly or removal from the helicopter.<br><br>**4.** Examine the main rotor hub for condition. If any damage is suspected to be related to the stall or surge, remove the main rotor hub assembly. Make an entry on the Historical Service Record and attach a tag on the main rotor hub and write, "THIS MAIN ROTOR HUB ASSEMBLY WAS REMOVED FROM SERVICE BECAUSE OF A COMPRESSOR STALL/SURGE." Send the component to a Bell Helicopter Textron approved facility for overhaul.<br><br>**5.** If no defects were detected on main rotor hub, the main rotor hub is serviceable.<br><br>**6.** If defects are detected in step 1, step 2, and step 4 through step 5, discard all bonded tail rotor driveshafts and perform a main rotor sudden stoppage inspection.<br><br>**SPECIAL INSPECTION**<br><br>After 25 hours of operation, examine chip detectors of transmission, freewheel assembly, and tail rotor gearbox. If the chip detector shows signs of metal particles, perform a serviceability check. Components that fail the serviceability check shall be removed. Make an entry on the applicable components Historical Service Record and attach a tag and write “THIS COMPONENT WAS REMOVED FROM SERVICE BECAUSE OF A COMPRESSOR STALL/SURGE”. Send the component to a Bell Helicopter Textron approved facility for overhaul. | | |

# CONDITIONAL INSPECTIONS

## 5-55. ENGINE COMPRESSOR STALL OR SURGE (CONT)

| DATA REFERENCE | INSPECTION TASK DESCRIPTION | INITIAL MECH | OTHER |
|---|---|---|---|
| | **PART III: INSPECTION FOR COMPRESSOR STALL OR SURGE WITH NOTICEABLE YAW**<br><br>**CAUTION**<br><br>WHEN A COMPRESSOR STALL OR SURGE WITH NOTICEABLE YAW HAS OCCURRED, DISCARD ALL TAIL ROTOR BONDED DRIVESHAFTS. | | |
| BHT-206L-CR&O | **1.** Remove and examine the engine-to-transmission main driveshaft for condition.<br><br>**2.** If any damage suspected to be related to the stall or surge, make an entry on the Historical Service Record and attach a tag on the driveshaft and write, “THIS COMPONENT WAS REMOVED FORM SERVICE BECAUSE OF A COMPRESSOR STALL”. Send the driveshaft to Bell Helicopter Textron CPR for evaluation.<br><br>**3.** If no defects were detected, return the engine-to-transmission main driveshaft to service. | | |
| | **TRANSMISSION ASSEMBLY** | | |
| BHT-206L-CR&O | **1.** Remove the transmission input pinion and triplex bearing.<br><br>**2.** Inspect the following gear teeth for scoring and other mechanical damage.<br><br>**a.** Input pinion gear.<br><br>**b.** Main input driven bevel gear.<br><br>**3.** If any damage suspected to be related to the stall or surge is found, make an entry on the Historical Service Record and attach a tag on the transmission assembly and write, “THIS COMPONENT WAS REMOVED FROM SERVICE BECAUSE OF A COMPRESSOR STALL”. Send the component to a Bell Helicopter Textron approved facility for overhaul.<br><br>**4.** If no defects were detected on the gears, the transmission assembly is serviceable. | | |

# CONDITIONAL INSPECTIONS

## 5-55. ENGINE COMPRESSOR STALL OR SURGE (CONT)

| DATA REFERENCE | INSPECTION TASK DESCRIPTION | INITIAL MECH | OTHER |
|---|---|---|---|
| | **TAIL ROTOR GEARBOX** | | |
| BHT-206L-CR&O | **1.** Remove the tail rotor gearbox input pinion. | | |
| | **2.** Inspect the following gear teeth for scoring and other mechanical damage. | | |
| | **a.** Input pinion gear. | | |
| | **b.** Spiral bevel gear. | | |
| | **3.** If any damage suspected to be related to the stall or surge is found, make an entry on the Historical Service Record and attach a tag on the tail rotor gearbox and write, “THIS COMPONENT WAS REMOVED FROM SERVICE BECAUSE OF A COMPRESSOR STALL”. Send the tail rotor gearbox to a Bell Helicopter Textron approved facility for overhaul. | | |
| | **4.** If no defects were detected on the gears, the tail rotor gearbox is serviceable. | | |
| Chapter 53 | **FUSELAGE** | | |
| | **1.** Examine the complete tailboom structure for distortion, buckles, cracks in the skin, and sheared or loose rivets. | | |
| | **2.** Inspect tailboom attachment fittings for cracks. | | |
| | **3.** Inspect the vertical fin for condition and security of attachment. | | |
| Chapter 63<br>Chapter 65 | **GROUND RUN** | | |
| BHT-206L4-FM-1 | **1.** Perform a ground run for a minimum of 30 minutes with the helicopter light on its skids. Remove and examine the chip detectors of the transmission assembly, freewheel assembly, and tail rotor gearbox. | | |

# CONDITIONAL INSPECTIONS

## 5-55. ENGINE COMPRESSOR STALL OR SURGE (CONT)

| DATA REFERENCE | INSPECTION TASK DESCRIPTION | INITIAL MECH | OTHER |
|---|---|---|---|
| | **2.** If the chip detector shows signs of metal particles, perform a serviceability check. Components that fail the serviceability check shall be removed. Make an entry on the applicable components Historical Service Record and attach a tag and write, “THIS COMPONENT WAS REMOVED FROM SERVICE BECAUSE OF A COMPRESSOR STALL/SURGE”. Send the component to a Bell Helicopter Textron approved facility for overhaul.<br><br>**3.** If no metal particles were found, the transmission assembly, freewheel assembly, and/or tail rotor gearbox are serviceable. | | |

# CONDITIONAL INSPECTIONS

## 5-56. LIGHTNING STRIKE

| DATA REFERENCE | INSPECTION TASK DESCRIPTION | INITIAL MECH | INITIAL OTHER |
|---|---|---|---|
| | **DATE:** _____ **W.O.** _____<br>**FACILITY:** _____<br>**HELICOPTER S/N:** _____<br>**REGISTRY NO.:** _____<br>**TOTAL TIME:** _____<br>**SIGNATURE:** _____<br><br>**NOTE**<br>This inspection must be accomplished after helicopter is suspected of receiving a lightning strike.<br><br>**LIGHTNING STRIKE**<br><br>**NOTE**<br>In all of the following instances, if significant damage has been found in any area, inspection shall be expanded in those areas until it extends beyond the zone of damage. Scrap any component that shows evidence of severe arc burns.<br><br>Because lightning behavior is difficult to predict, conduct a thorough inspection of the entire helicopter. Lightning damage may appear as burn marks, heat discoloration, arc marks, or small weld marks (where metal has melted and resolidified). Honeycomb and other composite materials may exhibit delamination. | | |

# CONDITIONAL INSPECTIONS

## 5-56. LIGHTNING STRIKE (CONT)

| DATA REFERENCE | INSPECTION TASK DESCRIPTION | INITIAL MECH | INITIAL OTHER |
|---|---|---|---|
| | **1.** Visually inspect all external surfaces of the helicopter paying particular attention to main rotor blades and hub, main rotor mast and controls, transmission and mounts, power plant and mounts, main and tail rotor driveshafting, tail rotor gearbox, tail rotor blades and hub, vertical fin, and horizontal stabilizer. Inspect landing gear skid tubes, crosstubes, and their fuselage attachment points. Check electrical instruments and systems. Check standby compass for erroneous indications. Remove and overhaul defective and/or damaged electrical instruments and systems.<br><br>**2.** If visual indications of damage are present, proceed as follows:<br><br>**NOTE**<br>Evaluate components removed from a helicopter following a lightning strike as an interrelated group. Make entries in component records to cross-reference part and serial numbers of other drive system components removed for evaluation.<br><br>**a.** Inspect main rotor blades. Blades that exhibit severe arcing shall be scrapped. Blades that exhibit light to moderate arcing shall be returned to a Bell Helicopter Textron approved blade repair facility for evaluation.<br><br>**(1)** Inspect blades for signs of burns and arcing at tip cap, root end closure, buffer pads, and blade bolt bushings. Burn marks can be very minute.<br><br>**(2)** Inspect main rotor blade bonded areas for debonding.<br><br>**b.** Remove main rotor hub for overhaul. State lightning strike as reason for removal.<br><br>**c.** Remove swashplate and support assembly for overhaul. State lightning strike as reason for removal.<br><br>**d.** Remove main driveshaft, freewheel assembly, transmission, and mast assembly for overhaul making note of lightning strike as reason for removal. | | |

# CONDITIONAL INSPECTIONS

## 5-56. LIGHTNING STRIKE (CONT)

| DATA REFERENCE | INSPECTION TASK DESCRIPTION | INITIAL MECH | INITIAL OTHER |
|---|---|---|---|
| | **e.** Inspect nodal beam, transmission mount fittings, and engine mounts. | | |
| BHT-206L-CR&O | **(1)** Visually inspect exterior surfaces for evidence of arcing or burning. Special attention should be given to contact surfaces of transmission and engine to their mounting systems, and of mounting systems to the airframe. | | |
| | **(2)** If indications of arcing or burning are present, overhaul parts. | | |
| | **f.** Inspect tail rotor blades and hub. Scrap blades if indications of burns or debonding. Remove tail rotor hub for overhaul. State lightning strike as reason for removal. | | |
| | **g.** Remove tail rotor driveshaft bearing hangers and tail rotor gearbox and return for overhaul. State lightning strike as reason for removal. | | |
| | **h.** Check auxiliary fins for evidence of burning or debonding. | | |
| | **i.** Inspect tailboom fitting for indication of arcing burns around mounting points of tail rotor gearbox and vertical fin. | | |
| Rolls-Royce 250-C30 Series Operation and Maintenance Manual, 14W2 | **j.** Inspect power plant assembly. | | |
| | **3.** If no indications of damage are found, do the following: | | |
| | **NOTE**<br>If no visual indications of damage are present, check all ferrous dynamic components by magnetometer. If magnetism is present, perform procedure indicated in step 2. Demagnetize all parts. | | |
| BHT-206L-CR&O | **a.** Remove main rotor hub and blade assembly. Remove main rotor grips. | | |
| | **(1)** Visually inspect needle bearings for signs of electrical arcing, burning, or delamination. | | |

# CONDITIONAL INSPECTIONS

## 5-56. LIGHTNING STRIKE (CONT)

| DATA REFERENCE | INSPECTION TASK DESCRIPTION | INITIAL MECH | INITIAL OTHER |
|---|---|---|---|
| | **(2)** Visually check pitch horns and trunnion bearing connections for arcing burns. | | |
| BHT-206L-CR&O | **(3)** If indications of arcing or burning are present, overhaul main rotor hub assembly and scrap pitch links and all attaching hardware. | | |
| BHT-206L-CR&O | **(4)** If no indications are found, reassemble main rotor hub. | | |
| | **b.** Remove main rotor mast assembly. Without removing bearing from mast, inspect visible portions of the bearing for signs of electrical arcing or burning. Rotate bearing during inspection. Check bearing for smooth rotation. Visually inspect the lower mast bearing race and driving spline on the mast for signs of arcing or burning. If indications of arcing, burning, or roughness of the bearing are present, transmission, mast assembly, and freewheel assembly shall be returned for overhaul. State lightning strike as reason for removal. | | |
| | **c.** Remove transmission top case and inspect for entry and exit of lightning strike. Special attention should be given to the planetary pinion and sun gear, ring gear, spiral bevel gear, and quill pinion. Check all bearings for smooth rotation and damage. If evidence of arcing or burning is found or bearings do not rotate smoothly, remove gearbox and return for overhaul, stating lighting strike as reason for removal. Scrap all parts that exhibit signs of arcing. | | |
| BHT-206L-CR&O | **(1)** If no indications of arcing are found, reassemble transmission and mast assembly and return to limited service. | | |
| | **(2)** After 5 hours, remove the chip detectors and filter and inspect for chips. | | |
| | **(a)** If no chip indications are found, return transmission to full service. | | |
| | **(b)** If chip indications are found, remove transmission, mast assembly, and freewheel assembly and return for overhaul. State lightning strike as reason for removal. Scrap all parts that exhibit signs of arcing. | | |

# CONDITIONAL INSPECTIONS

## 5-56. LIGHTNING STRIKE (CONT)

| DATA REFERENCE | INSPECTION TASK DESCRIPTION | INITIAL MECH | INITIAL OTHER |
|---|---|---|---|
| | **d.** Inspect nodal beam, transmission mount fittings, and engine mounts. | | |
| | **(1)** Visually inspect exterior surfaces for evidence of arcing or burning. Special attention should be given to contact surfaces of transmission and engine to their mounting systems, and of mounting systems to the airframe. | | |
| BHT-206L-CR&O | **(2)** If indications of arcing or burning are present, overhaul parts. | | |
| | **e.** Remove input quill assembly from tail rotor gearbox. Visually inspect gear teeth for signs of electrical arcing or burning. Rotate tail rotor mast to check for smooth rotation of bearings. | | |
| | **(1)** If evidence of arcing or burning is found or if bearings do not rotate smoothly, remove gearbox and return it for overhaul. State lightning strike as reason for removal. | | |
| BHT-206L-CR&O | **(2)** If no indications of damage are found and bearings rotate smoothly, reassemble gearbox and return it to limited service. After 5 hours, remove chip detector and inspect for chips. If no chip indications are found, return gearbox to full service. If chip indications are found, return gearbox for overhaul. State lightning strike as reason for removal. | | |
| | **f.** Inspect main driveshaft for evidence of arcing or burning. | | |
| BHT-206L-CR&O | **(1)** If no evidence of arcing is found, return to service. | | |
| | **(2)** Shafts that exhibit arcing or burning shall be scrapped. | | |
| | **(3)** If indications of arcing or burning are found on the main driveshaft or on any component of the tail rotor driveshaft installation, return freewheel assembly for overhaul. State lightning strike as reason for removal. | | |
| BHT-206L-CR&O | **g.** Disassemble swashplate and support assembly. Visually inspect for evidence of burning or arcing. Inspect bearings for smooth rotation and all hardware for evidence of arcing. | | |

# CONDITIONAL INSPECTIONS

## 5-56. LIGHTNING STRIKE (CONT)

| DATA REFERENCE | INSPECTION TASK DESCRIPTION | INITIAL MECH | INITIAL OTHER |
|---|---|---|---|
| BHT-206L-CR&O | **(1)** If indications of arcing or burning are present or bearings do not rotate smoothly, overhaul swashplate assembly. Replace the affected hardware. | | |
| BHT-206L-CR&O | **(2)** If no indications are found, reassemble the swashplate assembly and return to service. | | |
| | **h.** Inspect tailboom, horizontal stabilizer, auxiliary fins, and vertical fin for evidence of arcing, burning, or debonding paying particular attention to area around the mounting points for the tail rotor driveshaft hangers and tail rotor gearbox. | | |
| Rolls-Royce 250-C30 Series Operation and Maintenance Manual, 14W2 | **i.** Inspect power plant assembly. | | |

# CONDITIONAL INSPECTIONS

## 5-57. ENGINE OVERTEMP

| DATA REFERENCE | INSPECTION TASK DESCRIPTION | INITIAL MECH | INITIAL OTHER |
|---|---|---|---|
| | **DATE: _____ W.O. _____**<br>**FACILITY: _____**<br>**HELICOPTER S/N: _____**<br>**REGISTRY NO.: _____**<br>**TOTAL TIME: _____**<br>**SIGNATURE: _____** | | |
| Rolls-Royce 250-C30P Series Operation and Maintenance Manual, 14W2 | **ENGINE OVERTEMP**<br>— Inspect.<br>Perform hot end inspection of power plant assembly if start or transient turbine outlet temperature limits have been exceeded. | | |

# CONDITIONAL INSPECTIONS

## 5-58. STRIKE IMPACT TO AUXILIARY FINLETS BY MAIN ROTOR BLADES

| DATA REFERENCE | INSPECTION TASK DESCRIPTION | INITIAL MECH | INITIAL OTHER |
|---|---|---|---|
| | **DATE:** _____ **W.O.** _____<br>**FACILITY:** _____<br>**HELICOPTER S/N:** _____<br>**REGISTRY NO.:** _____<br>**TOTAL TIME:** _____<br>**SIGNATURE:** _____<br><br>**STRIKE IMPACT TO AUXILIARY FINLETS BY MAIN ROTOR BLADES**<br><br>A strike impact to the auxiliary finlets by main rotor blades is an incident in which a main rotor blade collides with either one or both auxiliary finlets and leaves a noticeable damage to either a main rotor blade or an auxiliary finlet.<br>When a strike impact has occurred, do the steps that follow:<br><br>**MAIN ROTOR BLADES**<br><br>**1.** Examine if a main rotor blade has contacted the tail rotor driveshaft cover. If the tail rotor driveshaft cover is damaged, do the conditional inspections listed in SUDDEN STOPPAGE - MAIN ROTOR - POWER “ON” or “OFF”. If not, do the steps that follow:<br><br>**2.** Examine the blade skin and bonded doublers for visible damage.<br><br>**3.** If damage to a blade cannot be repaired per BHT-206L4-MM-6, remove it. Put a tag on the blade and write “THIS BLADE WAS REMOVED FROM SERVICE BECAUSE OF STRIKE IMPACT TO AUXILIARY FINLETS”. Send the blade to an approved facility for repair.<br><br>**4.** If you do not find damage on the blade, the blade is serviceable. | | |

# CONDITIONAL INSPECTIONS

## 5-58. STRIKE IMPACT TO AUXILIARY FINLETS BY MAIN ROTOR BLADES (Cont)

| DATA REFERENCE | INSPECTION TASK DESCRIPTION | INITIAL MECH | INITIAL OTHER |
|---|---|---|---|
| | **AUXILARY FINLETS**<br><br>If the upper end of the finlets has a strike damage, put a tag on the auxiliary finlet and write “THIS AUXILIARY FINLET WAS REMOVED FROM SERVICE BECAUSE OF STRIKE IMPACT FROM A MAIN ROTOR BLADE”. Fill out a structural repair request per IL GEN-04-96 or Section 2 of the BHT-ALL-SRM and forward to Product Support Engineering (PSE) for repair evaluation.<br><br>**STABILIZER ELEVATOR**<br><br>**1.** For stabilizer elevator not equipped with end finlet fittings 206-021-103-ALL, do the steps that follow:<br><br>**a.** If an auxiliary finlet is damaged due to a main rotor strike, remove the stabilizer elevator for inspection.<br><br>**b.** Examine the external surface for skin deformation, bucking, or cracks.<br><br>**c.** Examine all inserts for looseness and bond condition.<br><br>**d.** If the stabilizer elevator is more than the repairs described in Chapter 53, put a tag on it and write “THIS STABILIZER ELEVATOR WAS REMOVED FROM SERVICE BECAUSE OF STRIKE IMPACT FROM MAIN ROTOR BLADE TO THE FINLETS”. Fill out a structural repair request per IL GEN-04-96 or Section 2 of the BHT-ALL-SRM and forward to PSE for a repair evaluation.<br><br>**2.** For stabilizer elevator equipped with end finlet fittings 206-021-103-ALL, do the steps that follow:<br><br>**a.** If an auxiliary finlet is damaged due to a main rotor strike, remove the stabilizer elevator for inspection.<br><br>**b.** Examine the external surface for skin deformation, bucking, or cracks.<br><br>**c.** Examine all inserts for looseness and bond condition.<br><br>**d.** Examine the end fitting fasteners for condition. | | |

# CONDITIONAL INSPECTIONS

## 5-58. STRIKE IMPACT TO AUXILIARY FINLETS BY MAIN ROTOR BLADES (Cont)

| DATA REFERENCE | INSPECTION TASK DESCRIPTION | INITIAL MECH | INITIAL OTHER |
|---|---|---|---|
| | **e.** Remove damaged finlets and do an Eddy current inspection to its adjacent end fitting of the stabilizer elevator. If one of the end fittings fails the Eddy current inspection, discard the stabilizer elevator.<br><br>**f.** If the end fitting has no damage but the damage to the stabilizer elevator is more than the repairs described in Chapter 53, put a tag on it and write “THIS STABILIZER ELEVATOR WAS REMOVED FROM SERVICE BECAUSE OF STRIKE IMPACT FROM THE MAIN ROTOR BLADE TO THE FINLETS”. Fill out a structural repair request per IL GEN 04-96 or Section 2 of the BHT-ALL-SRM and forward to PSE for a repair evaluation.<br><br>**TAILBOOM**<br><br>**1.** Examine all closing plates and support angles of stabilizer elevator for deformation or cracks.<br><br>**2.** Examine the tailboom skin aperture for stabilizer elevator for waviness, deformation, bucking, or cracks. If the damage to the skin is more than the repairs described in Chapter 53, put a tag on the tailboom and write “THIS TAILBOOM WAS REMOVED FROM SERVICE BECAUSE OF STRIKE IMPACT FROM MAIN ROTOR BLADE TO THE FINLETS”. Fill out a structural repair request per IL GEN-04-96 or Section 2 of the BHT-ALL-SRM and forward to PSE for repair evaluation. | | |

## 5-59. COMPONENT OVERHAUL SCHEDULE

The Component Overhaul Schedule (Table 5-4) gives the time interval between overhaul for each applicable helicopter component.

**WARNING**

DO NOT APPLY TOLERANCES TO PARTS WITH A LIMITED AIRWORTHINESS LIFE (CHAPTER 4).

**WARNING**

DO NOT GO MORE THAN RETIREMENT LIFE FOR CRITICAL COMPONENTS. REFER TO AIRWORTHINESS LIMITATIONS SCHEDULE (CHAPTER 4).

SOME PARTS INSTALLED AS ORIGINAL EQUIPMENT ON MILITARY HELICOPTERS CAN HAVE A LOWER AIRWORTHINESS LIFE AND/OR OVERHAUL SCHEDULE THAN WHEN USED ON A COMMERCIAL HELICOPTER. CONSEQUENTLY, PARTS THAT HAVE BEEN USED ON MILITARY HELICOPTERS MUST NOT BE USED ON COMMERCIAL HELICOPTERS.

**CAUTION**

OVERHAUL SCHEDULE FOR SOME KIT COMPONENTS AND/OR PARTS IS NOT COVERED IN THIS SCHEDULE. REFER TO APPLICABLE SERVICE INSTRUCTIONS FOR KIT COMPONENTS SCHEDULE.

**NOTE**

Refer to paragraph 5-6 for information on inspection and overhaul tolerance.

**NOTE**

Neither assignment of a time period for overhaul of a component or failure to assign a time period for overhaul of a component constitutes a warranty of any kind. The only warranty applicable to helicopter and all components is that warranty included in the Purchase Agreement for the helicopter or component.

The overhaul interval specified for all given part numbers contained in this Component Overhaul Schedule applies to all successive dash numbers (or suffixes) for that item unless otherwise specified.

**Table 5-4. Component Overhaul Schedule**

| NOMENCLATURE | PART NUMBER △1 | OVERHAUL INTERVAL (HOURS) |
|---|---|---|
| **MAIN ROTOR CONTROLS** | | |
| Swashplate and Support | 206-010-450-101 | 4800 hours |
| **MAIN ROTOR HUB** | | |
| Hub Assembly | 206-011-100-159/-105 | 2400 hours |
| **POWER TRAIN** | | |
| Transmission | 206-040-004-115 | 4500 hours |
| Mast Assembly | 206-040-014-107 | 3000 hours |
| Input Driveshaft | 206-340-300-101/-105 | △2 2500 hours |
| Freewheel Unit | 406-040-500-113 | 3000 hours |
| **TAIL ROTOR SYSTEM** | | |
| Tail Rotor Hub Assembly | 206-011-810-139 | 2500 hours |
| Tail Rotor Gearbox | 206-040-402-101 | 6000 hours |
| **HYDRAULIC SYSTEM** | | |
| Hydraulic Servo Actuators | 206-076-062-101 | 3600 hours |
| **POWER PLANT** | | |
| Turboshaft Engine | 250-C30P | Refer to Rolls-Royce 250-C30 Series Operation and Maintenance Manual, 14W2 |
| **STARTER GENERATORS** | | |
| Starter Generator | ALL | 1000 hours |

**NOTES:**

△1 The operating time specified for overhaul of all given part numbers listed applies to all successive dash numbers (or suffixes) for that component, unless otherwise specified.

△2 Input driveshafts 206-340-300-101/-105 must be overhauled at 5000 hours of operation and every 2500 hours of operation thereafter. Overhaul is to be done by Kamatics Corporation only. Return driveshaft to Bell Textron per Information Letter (IL) GEN-04-98.