MAINTENANCE PLANNING INFORMATION

NOTICE

The instructions set forth in this manual, as supplemented or modified by Alert Service Bulletins (ASB) or other directions issued by Bell and Airworthiness Directives (AD) issued by the applicable regulatory agencies, shall be strictly followed.

Copyright © 2017 Bell and Bell Canada Ltd. All rights reserved

POST OFFICE BOX 482 • FORT WORTH, TEXAS 76101

Export Classification C, ECCN EAR99

Issue 018 - 12 NOV 2025

POST OFFICE BOX 482 • FORT WORTH, TEXAS 76101

PROPRIETARY RIGHTS NOTICE

These data are proprietary to Bell Disclosure, reproduction, or use of these data for any purposes other than helicopter operation and maintenance is forbidden without prior authorization from Bell

DESTINATION CONTROL STATEMENT

These commodities, technology, or software were exported from the United States in accordance with the Export Administration Regulations (EAR). Diversion contrary to U.S. law prohibited.

Additional copies of this publication may be obtained by contacting:
Commercial Publications Distribution Center Bell P.O. Box 482 Fort Worth, Texas 76101-0482

POST OFFICE BOX 482 • FORT WORTH, TEXAS 76101

Highlights

The listed changes are introduced in issue 018, dated 2025-11-12, of this publication.

C = Changed data module, N = New data module

N/C	Data module	Reason for update
Front matter:		
C	BHT-A-00-00-00-00A-011A-A / 00003, Customer support and services - Function	
C	BHT-A-00-00-00-00A-023A-A / 00004, Warranty and Customer Feedback - Administrative forms and data	
Chapter 05 - Inspections:		
C	429-A-05-40-00-02A-281A-A / 00016, Scheduled Inspections - 200-Hour or 12-Month Inspection	Deleted - Inspection tasks.
C	429-A-05-40-00-35A-281A-A / 00017, Scheduled Inspections - 200-Hour Inspection	Added inspection tasks 623001, 623018A, 642010 and 643004A.

POST OFFICE BOX 482 • FORT WORTH, TEXAS 76101

Intentionally blank page

POST OFFICE BOX 482 • FORT WORTH, TEXAS 76101

LIST OF CHAPTERS

Chapter	Data module code
Chapter 04 - Airworthiness Limitations Schedule	429-A-04-00-00-00A-009A-A / 00007
Chapter 05 - Inspections	429-A-05-00-00-00A-009A-A / 00011

POST OFFICE BOX 482 • FORT WORTH, TEXAS 76101

Intentionally blank page

POST OFFICE BOX 482 • FORT WORTH, TEXAS 76101

List of Effective Data Modules

The listed documents are included in issue 018, dated 2025-11-12, of this publication.

C = Changed data module, N = New data module

Document title	Data module code / Seq number		Issue date	Applicable to
Temporary revision record - Technical standard records	DMC-429-A-00-71-00-00A-008A-A / 00002		2019-01-10	ALL
Customer support and services - Function	DMC-BHT-A-00-00-00-00A-011A-A / 00003	C	2025-11-12	ALL
Warranty and Customer Feedback - Administrative forms and data	DMC-BHT-A-00-00-00-00A-023A-A / 00004	C	2025-11-12	ALL
Bulletins - Technical standard records	DMC-429-A-00-71-00-00A-008B-A / 00004.1		2023-12-14	ALL

POST OFFICE BOX 482 • FORT WORTH, TEXAS 76101

Temporary revision record - Technical standard records

This temporary revision record provides a current listing of active temporary revisions against the manual. Temporary revisions which have been canceled/incorporated will only be maintained on the record until the next revision is issued. If there are no temporary revisions shown on the record, this is confirmation that there are no temporary revisions issued against the manual.

Temporary Revision No.	Title	Date issued	Date canceled

POST OFFICE BOX 482 • FORT WORTH, TEXAS 76101

Customer support and services - Function

1. Customer support and services

Flying smart means that no matter where you are, or what time it is, you can make a call and get additional information, clarification, or advice on a technical or operational issue concerning your helicopter or information contained in our Technical Publications. Product Support Engineering (PSE) is just a phone call away and may be contacted as follows:

Phone:	450-437-2862 or 800-363-8023 (US/Canada)
Fax:	450-433-0272
E-mail:	productsupport@bellflight.com

POST OFFICE BOX 482 • FORT WORTH, TEXAS 76101

Warranty and Customer Feedback - Administrative forms and data

WARNING

THIS MANUAL APPLIES ONLY TO HELICOPTERS AND COMPONENTS MAINTAINED IN ACCORDANCE WITH BELL APPROVED PROCEDURES USING BELL APPROVED PARTS.

ALL INSPECTION, REPAIR AND OVERHAUL PROCEDURES PUBLISHED BY BELL, INCLUDING PART RETIREMENT LIFE, ARE BASED SOLELY ON THE USE OF BELL PARTS THAT HAVE BEEN MAINTAINED USING BELL APPROVED DATA. THE DATA PUBLISHED HEREIN OR OTHERWISE SUPPLIED BY BELL IS NOT APPLICABLE TO NON-BELL PARTS OR PARTS THAT HAVE BEEN REPAIRED USING DATA AND/OR PROCESSES NOT APPROVED BY BELL.

BELL IS NOT RESPONSIBLE FOR ANY PART OTHER THAN THOSE THAT IT HAS APPROVED.

BEFORE PERFORMING ANY PROCEDURE CONTAINED IN THIS MANUAL YOU MUST INSPECT THE AFFECTED PARTS AND RECORDS FOR EVIDENCE OF ANY MANUFACTURE, REPAIR, REWORK, OR USE OF A PROCESS NOT APPROVED BY BELL.

IF YOU IDENTIFY OR SUSPECT THE USE OF PARTS NOT AUTHORIZED BY BELL, EITHER REMOVE THE AFFECTED ITEM FROM THE AIRCRAFT OR OBTAIN INSTRUCTIONS FOR CONTINUED AIRWORTHINESS FROM THE MANUFACTURER OR THE ORGANIZATION THAT APPROVED THE REPAIR.

For Spare Parts Warranty, refer to Table 1

For New Helicopter Warranty, refer to Table 2

Table 1. ***Spare Parts Warranty***

SPARE PARTS WARRANTY

WARRANTY: *Seller warrants each new helicopter part or helicopter part reconditioned by Seller to be free from defect in material and workmanship under normal use and service and if installed on Bell model helicopters for up to 1000 hours of operation, one (1) year from date of installation, or two (2) years from date of shipment by Seller, whichever occurs first. Seller assigns each manufacturer's warranty to Buyer to the extent such manufacturer's warranty exists and is assignable.*

Seller's sole obligation under this warranty is limited to the repair or replacement of parts which are determined to Seller's reasonable satisfaction to have been defective within the applicable warranty period as described above. Replacement of parts may be either new or reconditioned at Seller's election and at the lowest allowable maintenance level contained in Seller's manuals, service bulletins or applicable supplier manuals.

Seller shall also reimburse reasonable freight charges, excluding insurance, customs fees, duties, handling fees, and taxes. Seller shall not reimburse Buyer for any parts repaired or replaced outside of the Seller's Warranty Claims Process unless express prior written authorization is granted by Seller's Warranty Department to Buyer for such repair or replacement.

Parts, components and assemblies of all helicopter parts may have been restored or reworked due to mars, blemishes, dents or other irregularities during the manufacturing process. Such restoration and/or rework are permitted under Seller's approved manufacturing and engineering processes and guidelines. The restoration and/or rework so completed do not render such items defective in material or workmanship

NO FAULT FOUND:*In the event Seller determines, after evaluation of a returned part, that a defect does not exist, then Buyer shall pay all expenses incurred by Seller related to the return including, but not limited to, costs incurred in shipping and evaluating the part and cost for any replacement part and restocking of the part, which may include a fifteen percent (15%) restocking fee, per item, No Fault Found fee charged to Seller or a minimum of $300.00 USD. In addition, Seller shall not reimburse Buyer for any costs related to the removal or reinstallation of such a part.*

SELLER'S WARRANTY CLAIM PROCESS: *Defective parts must be reported in writing to the Seller's Warranty Administration within thirty (30) days of being found defective. Parts may be repaired or replaced with new or reconditioned parts, at Seller's election. Warranty adjustment is contingent upon the Buyer complying with the Seller's Warranty Process and with the Seller's Warranty Administration disposition instructions for defective parts. Failure to properly comply with Seller's Warranty Process may, at Seller's sole option, void Seller's warranty as to the allegedly defective part.*

RETURN SHIPMENT: *Parts returned to Seller will be eligible for remedy under this warranty only if the part is carefully packed by the Buyer for the return shipment. Damage occurring to a part due to improper packaging may result in the denial of a warranty claim. In the event that Seller determines a returned part to be damaged or unsalvageable due to improper packaging, the Buyer will be billed repair or replacement cost incurred by Seller. The party initiating shipment bears the risk of loss or damage to parts in transit.*

POST OFFICE BOX 482 • FORT WORTH, TEXAS 76101

Table 1. ***Spare Parts Warranty*** **(continued)**

CORE RETURNS: *Per Seller's determination that a core return is required for which Seller has furnished a replacement part through the Warranty Process shall be shipped by Buyer, with all historical service records, to a facility designated by Seller, within thirty (30) days of shipment by Seller of the replacement part. Buyer shall provide Seller with proof of shipment within thirty (30) days following shipment of the replacement part. In the event that Buyer fails to provide Seller with such proof of shipment within the thirty (30) days, fails to provide the applicable historical service records or provide the correct RMA, Buyer shall be charged the new list price of the replacement part. If the Buyer returns the core, and provides the historical records and the RMA after the 31st day, the Buyer will be credited the invoiced amount upon receipt of the core minus a restocking fee of fifteen percent (15%), or minimum of $300.00 USD,per item, of the then said standard list price of the material provided If Historical Records are not provided and can be recreated by Seller, a debit of $500.00 USD per item will occur to Buyers account.*

WARRANTY AND LIABILITY DISCLAIMERS AND EXCLUSIONS: THIS WARRANTY IS GIVEN AND ACCEPTED IN PLACE OF (i) ALL OTHER WARRANTIES OR CONDITIONS, EXPRESS OR IMPLIED, INCLUDING BUT NOT LIMITED TO THE IMPLIED WARRANTIES OR CONDITIONS OF MERCHANTABILITY OR FITNESS FOR A PARTICULAR PURPOSE AND (ii) ANY OBLIGATION, LIABILITY, RIGHT, CLAIM OR REMEDY IN CONTRACT OR IN TORT, INCLUDING PRODUCT LIABILITIES BASED UPON STRICT LIABILITY, NEGLIGENCE, OR IMPLIED WARRANTY IN LAW.

This warranty is the only warranty made by Seller. The Buyer's sole remedy for a breach of this warranty or any defect in a part is the repair or replacement of the helicopter part and reimbursement of reasonable freight charges. Seller excludes liability, whether as a result of a breach of contract or warranty, negligence or strict product liability, for incidental, special, consequential and/or punitive damages, including without limitation, damage to the helicopter or other property, costs and expenses resulting from required changes or modifications to helicopter components and assemblies, changes in retirement lives and overhaul periods, local customs fees and taxes, and costs or expenses for commercial losses or lost profits due to loss of use or grounding of helicopters or otherwise.

Seller makes no warranty and disclaims all liability in contract or in tort, including, without limitation, negligence and strict tort liability, with respect to work performed by third parties at Buyer's request and with respect to engines, engine accessories, batteries, paint, radios, any and all customizing equipment, and Buyer furnished equipment or equipment manufactured by others (e.g. STC kits) and installed at Buyer's request.

Seller makes no warranty and disclaims all liability with respect to components or parts damaged by, or worn due to, normal wear and tear, erosion or corrosion. Seller makes no warranty and disclaims all liability for consumables which are defined as items required for normal and routine maintenance or replaced at scheduled intervals shorter than the warranty period. "Consumables" include but are not limited to engine and hydraulic oil, oil filters, packings and o-rings, anti-corrosion and/or sealing compounds, brush plating material, nuts, bolts, washers, screws, fluids, compounds, and standard aircraft hardware that is readily available to aircraft operators from sources other than Seller.

This warranty shall not apply to any helicopter part which has been repaired or altered outside Seller's factory in any way so as, in Seller's sole judgment, to affect its stability, safety or reliability. This warranty shall not apply to any helicopter part which has been subject to misuse, negligence or accident, or which has been installed in any aircraft which has been destroyed. Repairs and alterations which use or incorporate parts and components other than genuine Bell parts or parts approved by Bell for direct acquisition from sources other than Bell itself are not warranted by Bell, and this warranty shall be void to the extent that such repairs and alterations, in Seller's sole judgment, affect the stability, safety or reliability of the helicopter or any part thereof, or damage genuine Bell or Bell-approved parts. No person, corporation or organization, including Bell Authorized Customer Service Facilities, is authorized by Seller to assume for it any other liability in connection with the sale of its helicopters and parts.

NO STATEMENT, WHETHER WRITTEN OR ORAL, MADE BY ANY PERSON, CORPORATION OR ORGANIZATION, INCLUDING BELL AUTHORIZED CUSTOMER SERVICE FACILITIES, MAY BE TAKEN AS A WARRANTY NOR WILL IT BIND SELLER.

CHOICE OF LAW AND JURISDICTION: *This warranty shall be interpreted under and governed by the laws of the State of Texas. All legal actions based upon claims or disputes pertaining to or involving this warranty including, but not limited to, Seller's denial of any claim or portion thereof under this warranty, must be filed in the courts of general jurisdiction of Tarrant County, Texas or in the United States District Court for the Northern District of Texas, Ft. Worth Division located in Ft. Worth, Tarrant County, Texas. In the event that Buyer files such an action in either of the court systems identified above, and a final judgment in Seller's favor is rendered by such court, then Buyer shall indemnify Seller for all costs, expenses and attorneys' fees incurred by Seller in defense of such claims. In the event Buyer files such a legal action in a court other than those specified, and Seller successfully obtains dismissal of that action or transfer thereof to the above described court systems, then Buyer shall indemnify Seller for all costs, expenses and attorneys' fees incurred by Seller in obtaining such dismissal or transfer.*

Table 2. ***New Helicopter Warranty***

NEW HELICOPTER WARRANTY

POST OFFICE BOX 482 • FORT WORTH, TEXAS 76101

Table 2. *New Helicopter Warranty* (continued)

WARRANTY:*Seller warrants each new helicopter to be free from defect in material or workmanship under normal use and service for 1,000 hours of operation or three (3) years from acceptance, whichever occurs first. Spare parts installed as warranty replacement on helicopters which are covered by this New Helicopter Warranty will only be warranted for the balance of the original aircraft warranty. Seller assigns each manufacturer's warranty to Buyer to the extent such manufacturer's warranty exists and is assignable.*

In addition, during the first year or within 1,000 hours of total aircraft time, whichever occurs first, the Seller shall reimburse Buyer at a regional labor rate, as determined solely by Seller, for reasonable actual labor costs incurred directly related to removal and reinstallation of parts determined to be defective. Seller shall not reimburse labor costs incurred for any other activity, such as troubleshooting, inspection, testing or similar activities; any reimbursement amount issued in accordance with this warranty shall be in Seller's sole discretion. Seller shall not reimburse any labor costs (1) which it does not deem to be reasonable, (2) which it does not deem directly related to removal and reinstallation, or (3) for buyer furnished equipment or equipment manufactured by other (e.g. STC).

Seller shall also reimburse reasonable freight charges, excluding insurance, customs fees, duties, handling fees, and taxes. Seller shall not reimburse Buyer for any parts repaired or replaced outside of the Seller's Warranty Claims Process unless express prior written authorization is granted by Seller's Warranty Department to Buyer for such repair or replacement.

Parts, components and assemblies of all helicopter parts may have been restored or reworked due to mars, blemishes, dents or other irregularities during the manufacturing process. Such restoration and/or rework are permitted under Seller's approved manufacturing and engineering processes and guidelines. The restoration and/or rework so completed do not render such items defective in material or workmanship.

Seller's sole obligation under this warranty is limited to the repair or replacement of parts which are determined to Seller's reasonable satisfaction to have been defective within the applicable warranty period as described above. Replacement of parts may be either new or reconditioned at Seller's election and at the lowest allowable maintenance level contained in Seller's manuals, service bulletins or applicable Supplier manuals.

NO FAULT FOUND: *In the event Seller determines, after evaluation of a returned part, that a defect does not exist, then Buyer shall pay all expenses incurred by Seller related to the return including, but not limited to, costs incurred in shipping, evaluating the part, cost for any replacement part and restocking of the part which is a minimum of $300.00USD or up to fifteen percent (15%) list price of the part, as well as any No Fault Found fees incurred by Seller. In addition, Seller shall not reimburse Buyer for any costs related to the removal or reinstallation of such a part.*

SELLER'S WARRANTY CLAIM PROCESS: *Defective parts must be reported in writing to the Seller's Warranty Administration within thirty (30) days of being found defective. Parts may be repaired or replaced with new or reconditioned parts, at Seller's election. Warranty adjustment is contingent upon the Buyer complying with the Seller's Warranty Process and with the Seller's Warranty Administration disposition instructions for defective parts. Failure to properly comply with Seller's Warranty Process may, at Seller's sole option, void Seller's warranty as to the allegedly defective part.*

RETURN SHIPMENT: *Defective parts returned to Seller will be eligible for remedy under this warranty only if the part is carefully packed by the Buyer for the return shipment. Damage occurring to a part due to improper packaging may result in the denial of a warranty claim. In the event that Seller determines a returned part to be damaged or unsalvageable due to improper packaging, the Buyer will be billed repair or replacement cost incurred by Seller. The party initiating shipment bears the risk of loss or damage to parts in transit.*

CORE RETURNS: *Per Seller's determination that a core return is required for which Seller has furnished a replacement part through the Warranty Process, the core shall be shipped by Buyer, with all historical service records, to a facility designated by Seller, within thirty (30) days of shipment by Seller of the replacement part. Buyer shall provide Seller with proof of shipment within thirty (30) days following shipment of the replacement part. In the event that Buyer fails to provide Seller with such proof of shipment within the thirty (30) days, fails to provide the applicable historical service records or provide the correct RMA, Buyer shall be charged the new list price of the replacement part. If the Buyer returns the core, and provides the historical records and the RMA after the 31st day, the Buyer will be credited the invoiced amount upon receipt of the core minus a restocking fee minimum of $300.00 USD or up to fifteen percent (15%), ,per item, of the then standard list price of the material provided If Historical Records are not provided and can be recreated by Seller, a debit of $500.00 USD per item will be made to Buyers account.*

WARRANTY AND LIABILITY DISCLAIMERS AND EXCLUSIONS: *THIS WARRANTY IS GIVEN AND ACCEPTED IN PLACE OF (i) ALL OTHER WARRANTIES OR CONDITIONS, EXPRESS OR IMPLIED, INCLUDING BUT NOT LIMITED TO THE IMPLIED WARRANTIES OR CONDITIONS OF MERCHANTABILITY OR FITNESS FOR A PARTICULAR PURPOSE AND (ii) ANY OBLIGATION, LIABILITY, RIGHT, CLAIM OR REMEDY IN CONTRACT OR IN TORT, INCLUDING PRODUCT LIABILITIES BASED UPON STRICT LIABILITY, NEGLIGENCE, OR IMPLIED WARRANTY IN LAW.*

POST OFFICE BOX 482 • FORT WORTH, TEXAS 76101

Table 2. *New Helicopter Warranty* (continued)

This warranty is the only warranty made by Seller. The Buyer's sole remedy for a breach of this warranty or any defect in a part is the repair or replacement of the helicopter part, reimbursement of reasonable freight charges, and reimbursement of reasonable labor costs directly related to removal and reinstallation as provided herein. Seller excludes liability, whether as a result of a breach of contract or warranty, negligence or strict product liability, for incidental or consequential damages, including without limitation, damage to the helicopter or other property, costs and expenses resulting from required changes or modifications to helicopter components and assemblies, changes in retirement lives and overhaul periods, local customs fees and taxes, and costs or expenses for commercial losses or lost profits due to loss of use or grounding of helicopters or otherwise.

Seller makes no warranty and disclaims all liability in contract or in tort, including, without limitation, negligence and strict tort liability, with respect to work performed by third parties at Buyer's request and with respect to engines, engine accessories, batteries, paint, radios, any and all customizing equipment, and Buyer furnished equipment or equipment manufactured by others (e.g. STC kits) and installed at Buyer's request.

Seller makes no warranty and disclaims all liability with respect to components or parts damaged by, or worn due to, normal wear and tear, erosion or corrosion. Seller makes no warranty and disclaims all liability for consumables which are defined as items required for normal and routine maintenance or replaced at scheduled intervals shorter than the warranty period. "Consumables" include but are not limited to engine and hydraulic oil, oil filters, packings and o-rings, anti-corrosion and/or sealing compounds, brush plating material, nuts, bolts, washers, screws, fluids, compounds, and standard aircraft hardware that is readily available to aircraft operators from sources other than Seller.

This warranty shall not apply to any helicopter part which has been repaired or altered outside Seller's factory in any way so as, in Seller's sole judgment, to affect its stability, safety or reliability. This warranty shall not apply to any helicopter part which has been subject to misuse, negligence or accident, or which has been installed in any aircraft which has been destroyed. Repairs and alterations which use or incorporate parts and components other than genuine Bell parts or parts approved by Bell for direct acquisition from sources other than Bell itself are not warranted by Bell, and this warranty shall be void to the extent that such repairs and alterations, in Seller's sole judgment, affect the stability, safety or reliability of the helicopter or any part thereof, or damage genuine Bell or Bell-approved parts. No person, corporation or organization, including Bell Authorized Customer Service Facilities, is authorized by Seller to assume for it any other liability in connection with the sale of its helicopters and parts.

NO STATEMENT, WHETHER WRITTEN OR ORAL, MADE BY ANY PERSON, CORPORATION OR ORGANIZATION, INCLUDING BELL AUTHORIZED CUSTOMER SERVICE FACILITIES, MAY BE TAKEN AS A WARRANTY NOR WILL IT BIND SELLER.

CHOICE OF LAW AND JURISDICTION: *This warranty shall be interpreted under and governed by the laws of the State of Texas. All legal actions based upon claims or disputes pertaining to or involving this warranty including, but not limited to, Seller's denial of any claim or portion thereof under this warranty, must be filed in the courts of general jurisdiction of Tarrant County, Texas or in the United States District Court for the Northern District of Texas, Ft. Worth Division located in Ft. Worth, Tarrant County, Texas. In the event that Buyer files such an action in either of the court systems identified above, and a final judgment in Seller's favor is rendered by such court, then Buyer shall indemnify Seller for all costs, expenses and attorneys' fees incurred by Seller in defense of such claims. In the event Buyer files such a legal action in a court other than those specified, and Seller successfully obtains dismissal of that action or transfer thereof to the above described court systems, then Buyer shall indemnify Seller for all costs, expenses and attorneys' fees incurred by Seller in obtaining such dismissal or transfer.*

POST OFFICE BOX 482 • FORT WORTH, TEXAS 76101

HELP

H ELP

E VALUATE

L OGISTICS

P UBLICATIONS

Have you found something wrong with this manual — an error, an inconsistency, unclear instructions, etc.? Although we strive for accuracy and clarity, we may make errors on occasion. If we do and you discover it, we would appreciate your telling us about it so that we can change whatever is incorrect or unclear. Please be as specific as possible.

Your complaint or suggestion will be acknowledged and we will tell you what we intend to do.

Please email publications@bellflight.com, to inform us where we have erred.

Your assistance is sincerely appreciated.

ICN-BHT-A-000000-A-97499-00007-F-002-01

Figure 1. HELP page (Sheet 1 of 1)

POST OFFICE BOX 482 • FORT WORTH, TEXAS 76101

Bulletins - Technical standard records

This Bulletin Record provides a current listing of applicable bulletins that have been incorporated in this manual. Subsequent applicable bulletins will be incorporated in future revisions/reissues.

Table 1. ALERT SERVICE BULLETINS

ASB Number	Subject	Date
429-22-58 (1)	Transmission mounted bellcranks and support, inspection of	27 OCT 2022
1 *This and all previously issued applicable bulletins have been incorporated, except 429-21-56, 429-19-47, 429-19-43, 429-18-41, 429-16-30, 429-16-29, 429-14-15, 429-13-07 and 429-11-03.*		

Table 2. TECHNICAL BULLETINS

TB Number	Subject	Date
429-13-32 (1)	Sliding Passenger Door, Improvement of	3 MAY 2013
1 This and all previously issued applicable bulletins have been incorporated, except 429-11-10.		

POST OFFICE BOX 482 • FORT WORTH, TEXAS 76101

Intentionally blank page

POST OFFICE BOX 482 • FORT WORTH, TEXAS 76101

Use of a S1000D publication - Introduction

1. Use of a S1000D publication - General information

1.1. Document structure

The breakdown of the helicopter into systems within the manuals is done under the S1000D specification (S1000D-I9005-01000-00, Issue No. 4.0,4, may 12, 2009).

This publication is written in Simplified English and obeys the instructions given in document (ASD-STE100, Issue 6, January 2013). The European Association of Aerospace Industries (ASD) prepared these documents.

All the data are included in data modules. A code identifies each data module.

1.1.1. Data Module Code (DMC)

The Data Module Code (DMC) structure is shown in Table 1.

Table 1. DMC structure

BHT	A	29-10-01	00A	520A	A
Paragraph 1.1.1.1	Paragraph 1.1.1.2	Paragraph 1.1.1.3	Paragraph 1.1.1.4	Paragraph 1.1.1.5	Paragraph 1.1.1.6

1.1.1.1. Model identification code

The model identification code is BHT.

1.1.1.2. System difference code

The system difference code is a letter (letters I and O are not used).

This letter identifies two or more sub-systems that can be installed as alternative items because they do the same function.

1.1.1.3. Standard Numbering System (SNS) code

The Standard Numbering System (SNS) code includes three pairs of digits that show:

- The system (e.g., 29, hydraulic power)
- The subsystem and the sub-subsystem (e.g., 10, main hydraulic)

NOTE

When the sub-subsystem code is zero, the two digits show all of the subsystem.

- The component (e.g., 01, hydraulic reservoir filter module)

1.1.1.4. Disassembly code and disassembly code variant

1.1.1.4.1. Disassembly code

The disassembly code is a two-digit code.

The disassembly code shows the breakdown of a component, as follows:

- 00 - Data module for all of the helicopter, system, subsystem, or component.
- 01 - Data module for the first assembly that you remove from the component.
- 02 - Data module for the second assembly that you remove from the component.

Code 03 and the subsequent codes refer to the third, fourth, etc assembly that you remove from the component.

The disassembly code also identifies the data modules in sequence.

1.1.1.4.2. Disassembly code variant

The disassembly code variant is a letter (letters I and O are not used) that identifies alternative items.

These items are different, but the difference is too small to cause a change in the system difference code.

POST OFFICE BOX 482 • FORT WORTH, TEXAS 76101

1.1.1.5. Information code and information code variant

1.1.1.5.1. Information code

The information code is a three-digit code.

The information code identifies the types of information you can find in the data module.

1.1.1.5.2. Information code variant

The information code variant is a letter (letters I and O are not used).

The information code variant is used for different data modules that are applicable to the same component and type of operation.

1.1.1.6. Item location code

You can find these item location codes:

- A on the helicopter.
- B on the removed assembly/component.
- D applicable to all the locations.
- Z is used as a generic item location code.

1.1.2. List of Effective Data Modules (LOEDM)

Each chapter includes a List of Effective Data Modules (LOEDM) . The list shows the data module codes of all the data modules in the chapter.

The LOEDM gives the information that follows for each data module:

- Technical name and information name columns. These two columns together give the title of the data module.
- Document identifier column. This column gives the data module code.
- The status of the data module. This column gives the information about the status of the data module (N for new and C for changed).
- Issue date. This column gives the date of the data module changes.
- Applicability column. This column gives information about the applicability of the data module to different versions, configurations, and modifications of the helicopter.

POST OFFICE BOX 482 • FORT WORTH, TEXAS 76101

Maintenance planning information - Lists of terms

1. Glossary of terms

Airworthiness Limitations	A section of the Instructions for Continued Airworthiness (ICA) that contains each mandatory replacement time, inspection interval, and related inspection task (429-A-04-00-00-00A-009A-A / 00007). The information contained in the Airworthiness Limitations section may be changed to reflect service and/or test experience or new analysis methods.
Calendar Time	The elapsed time applicable to a specified calendar interval. The elapsed time starts on the day the inspection is completed, the component is installed, or the rotor is turned for the first time and ends on the day that the time limit expires. For example, if a repetitive inspection task with a calendar time of 1 year is completed on June 10th, the task would need to be subsequently performed on June 10th of the following year. Calendar time is continuous. Calendar time does not stop when removing a component or placing the helicopter in storage, etc..
Condition	The state of an item compared to a known standard.
Damage	A physical deterioration of a component.
Delamination	Structural separation or cracking that occurs at or in the bond plane of a structural element, within a structural assembly, caused by in service accidental damage, environmental effects, and/or cyclic loading.
Disbond	See Delamination.
Discard	The removal from service of an item at a specified life limit or item that has damage that cannot be repaired.
Electrical Wire Interconnection System (EWIS)	An electrical connection between two or more points including the associated termination devices (e.g., connectors, terminal blocks, splices) and the necessary means for its installation and identification. It does not include system components (line replaceable units), relays, lights, etc.
Examine, Visually	Look carefully to determine the condition of a part/component. Find how that condition relates to a specific standard.
Failure	The inability of an item to perform within previously specified limits.
Fault	An identifiable condition in which one element of a redundant system has failed (no longer available) without impact on the required function output of the system. At the system level, a fault is not considered a functional failure.
Flight Cycle	*Flight cycle is one takeoff and one landing of the aircraft.*
Flight Time	See Time-in-Service (Flight Time).
Function	The normal characteristic actions of an item.
Functional Check	A quantitative check to determine if one or more functions of an item performs within specified limits.
Functional Failure	Failure of an item to perform its intended function within specified limits.
Inspection	A non-destructive examination of a part, component, or system to verify its conformity to a specific standard.
Inspection, Detailed	An intensive examination of a specific item, installation, or assembly to detect damage, failure, or irregularity. Available lighting is normally supplemented with a direct source of good lighting at an intensity deemed appropriate. Inspection aids such as mirrors, magnifying lenses, etc. may be necessary. Surface cleaning and elaborate access procedures may be required.
Inspection, General Visual	A visual examination of an interior or exterior area, installation, or assembly to detect obvious damage, failure, or irregularity. This level of inspection is made from within touching distance, unless otherwise specified. A mirror may be necessary to enhance visual access to all exposed surfaces in the inspection area. This level of inspection is made under normal available lighting conditions such as daylight, hangar lighting, flashlight, or drop-light and may require removal or opening of access panels or doors. Stands, ladders, or platforms may be required to gain proximity to the area being checked.

POST OFFICE BOX 482 • FORT WORTH, TEXAS 76101

Inspection, Special Detailed	An intensive examination of a specific item, installation, or assembly to detect damage, failure, or irregularity. The examination is likely to make extensive use of specialized inspection techniques and/or equipment. Intricate cleaning and substantial access or disassembly procedures may be required.
Inspection, Zonal	A collective term comprising selected general visual inspections and visual checks that is applied to each zone, defined by access and area, to check system and power plant installations and structure for security and general condition.
Inspection, Non-scheduled	An inspection that is not part of a schedule.
Inspection, Opportunity	An inspection that is performed in conjunction with another scheduled inspection or maintenance task, while in the same area or zone.
Interval, Initial	Interval between the start of service-life and the first task accomplishment.
Interval, Repeat	The interval (after the initial interval) between successive accomplishments of a specific maintenance task.
Item	Any level of hardware assembly (e.g., system, subsystem, module, accessory, component, unit, part, etc.).
Lubrication	See Servicing.
Maintenance	The servicing and/or the repair of a helicopter, a system, or a component to maintain its serviceability.
Maintenance, Preventive	To do small maintenance action(s) on a regular basis to prevent non-scheduled maintenance.
Maintenance Significant Item (MSI)	Items identified by the manufacturer whose failure: 1. could affect safety (on ground or in flight), and/or 2. is undetectable during operations, and/or 3. could have significant operational impact, and/or 4. could have significant economic impact.
Operating Time	Actual flight time or calendar time that must be recorded in the Historical Service Records (HSR) or in the helicopter logs. The operating time is specified as Time-in-Service (Flight Time) and/or Calendar Time.
Operational Check	A task to determine that an item is fulfilling its intended purpose. It does not require quantitative tolerances. This is a failure finding task.
Program, Lead-The-Fleet (LTF)	A program used to validate the performance of an approved product improvement or a change to a maintenance interval. The engineering aspects of this change are approved. The program is closely monitored by Bell Helicopter Textron (BHT) in an operational environment with selected operators.
Program, Special	An approved program that may be initiated under certain special conditions to meet specific requirements. The program is clearly defined through a plan and the engineering and maintenance aspects are approved by the regulatory authorities.
Protective Device	Any device or system that has a function to avoid, eliminate, or reduce the consequences of an event or the failure of some other function.
Residual Fuel	The amount of unusable fuel that can be drained.
Retirement Index Number (RIN)	This is for components sensitive to operational events, such as normal landings, run-on landings, and autorotation landings. This number is based on the fatigue damage that results from these events.
Safety	Safety shall be considered as adversely affected if the consequences of the failure condition would prevent continued safe flight and landing of the helicopter and/or might cause serious or fatal injury to human occupants.
Scale Reading	The value recorded directly by a scale before subtracting the tare weight.
Security	The presence of attaching parts that are properly tightened or appear to be, and the presence of properly installed (as required) locking devices such as lockwire, cotter pins, or other.
Servicing	Any act of lubricating or servicing for the purpose of maintaining inherent design capabilities.

Standard	A specified rule, reference, or measure that you use to determine the condition of a component.
Time-in-Service (Flight Time)	The measured time that starts the moment the helicopter leaves the ground and continues until it touches the ground at the next point of landing. The time when the helicopter is on the ground, with the engine and the rotor turning, is not included.
Torque Event	A significant change in power setting. The types of power setting changes are as follows: - A Ground-Air-Ground (GAG) event (i.e., one takeoff plus the subsequent landing) - A load lift, such as a cargo hook lift operation, a water bucket lift operation, or an airborne replenishment of fixed internal or external reservoirs
Zone	A limited area of the helicopter that may contain more than one system or component, whether related or not. A zone includes all of the structural assemblies, mechanical assemblies, mechanical systems, and Electrical Wire Interconnection Systems (EWIS) contained within the zone limits (BHT-429-MM, Chapter 6).

POST OFFICE BOX 482 • FORT WORTH, TEXAS 76101

Intentionally blank page

POST OFFICE BOX 482 • FORT WORTH, TEXAS 76101

CHAPTER 04
AIRWORTHINESS LIMITATIONS SCHEDULE

MAINTENANCE PLANNING INFORMATION

POST OFFICE BOX 482 • FORT WORTH, TEXAS 76101

Intentionally blank page

POST OFFICE BOX 482 • FORT WORTH, TEXAS 76101

List of Effective Data Modules

The listed documents are included in issue 018, dated 2025-11-12, of this publication.

C = Changed data module, N = New data module

Document title	Data module code / Seq number	Issue date	Applicable to
Airworthiness limitations schedule - Approval	DMC-429-A-04-00-00-00A-023A-A / 00008	2019-01-10	ALL
Airworthiness limitations schedule - Log of TC approved revisions	DMC-429-A-04-00-00-00B-023A-A / 00009	2023-09-11	ALL
Airworthiness Limitations Schedule - Airworthiness Limitations Schedule	DMC-429-A-04-00-00-00A-288A-A / 00010	2023-09-11	ALL

POST OFFICE BOX 482 • FORT WORTH, TEXAS 76101

Intentionally blank page

POST OFFICE BOX 482 • FORT WORTH, TEXAS 76101

Airworthiness limitations schedule - Approval

The Airworthiness Limitations Schedule is approved by the Minister and specifies the maintenance required by any applicable airworthiness or operational rules unless an alternative program has been approved by the Minister.

Chief Engineering
National Aircraft Certification
Transport Canada

POST OFFICE BOX 482 • FORT WORTH, TEXAS 76101

Intentionally blank page

POST OFFICE BOX 482 • FORT WORTH, TEXAS 76101

Airworthiness limitations schedule - Log of TC approved revisions

ISSUE NUMBER	DATE OF SIGNATURE	TC SIGNATURE
ISSUE 001	25 July 2018	
ISSUE 002	31 July 2023	Digitally signed by Yu, Jackie Date: 2023.07.31 15:19:28 -04'00'
ISSUE 003	11 September 2023	Digitally signed by Yu, Jackie Date: 2023.09.11 11:54:44 -04'00'

POST OFFICE BOX 482 • FORT WORTH, TEXAS 76101

Intentionally blank page

POST OFFICE BOX 482 • FORT WORTH, TEXAS 76101

Airworthiness Limitations Schedule - Airworthiness Limitations Schedule

WARNING

THE MODEL 429 HELICOPTER CONTAINS CRITICAL PARTS. FAILURE OF THESE PARTS DURING GROUND OR FLIGHT OPERATIONS CAN HAVE A CATASTROPHIC EFFECT ON THE HELICOPTER. CARE MUST BE TAKEN DURING MAINTENANCE, INSPECTION, REPAIR, TRANSPORTATION, AND STORAGE OF THE CRITICAL PARTS THAT ARE REMOVED AND INSTALLED. REFER TO BHT-429-MM, CHAPTER 1 FOR ADDITIONAL INFORMATION AND REQUIREMENTS PERTAINING TO CRITICAL PARTS.

WARNING

ALL REPAIR AND OVERHAUL PROCEDURE LIVES PUBLISHED BY BELL HELICOPTER TEXTRON, INCLUDING COMPONENT RETIREMENT LIFE, ARE BASED SOLELY ON THE USE OF BELL HELICOPTER TEXTRON APPROVED PARTS AND PROCESSES. IF PARTS OR PROCESSES DEVELOPED OR APPROVED BY PARTIES OTHER THAN BELL HELICOPTER ARE USED, THEN THE DATA PUBLISHED OR OTHERWISE SUPPLIED BY BELL HELICOPTER ARE NOT APPLICABLE. THE USER IS WARNED TO NOT RELY ON BELL HELICOPTER DATA FOR PARTS AND PROCESSES NOT APPROVED BY BELL HELICOPTER. ALL APPLICABLE INSPECTIONS AND REPAIR METHODS MUST BE OBTAINED FROM THE SUPPLIER OF THE PARTS OR PROCESSES NOT APPROVED BY BELL HELICOPTER. BELL HELICOPTER IS NOT RESPONSIBLE FOR PARTS OR PROCESSES OTHER THAN THOSE THAT IT HAS ITSELF DEVELOPED OR APPROVED.

WARNING

SOME PARTS ARE INSTALLED AS ORIGINAL EQUIPMENT ON BOTH MILITARY AND COMMERCIAL HELICOPTERS AND MAY HAVE A LOWER AIRWORTHINESS LIFE AND/OR INSPECTION SCHEDULE WHEN USED ON A MILITARY HELICOPTER. IN ADDITION, CIRCUMSTANCES SURROUNDING THEIR USE MAY CALL FOR OPERATION OF THE MILITARY HELICOPTER OUTSIDE OF THE APPROVED COMMERCIAL FLIGHT ENVELOPE. CONSEQUENTLY, PARTS THAT HAVE BEEN USED ON MILITARY HELICOPTERS SHOULD NOT BE USED ON COMMERCIAL HELICOPTERS.

NOTE

Refer to BHT-429-MM, Chapter 1 for a definition of the technical terms used in this chapter.

This chapter specifies the mandatory airworthiness lives and mandatory inspection intervals applicable to the Model 429 helicopter.

NOTE

The airworthiness life or inspection interval for any part number contained in this schedule applies to all the successive dash numbers for that component unless it is otherwise specified.

The airworthiness limitations schedule Table 1 summarizes the mandatory maximum life in hours, years, landings, or by Retirement Index Number (RIN) of components with a limited airworthiness life. Parts that are not on the schedule have an unlimited airworthiness life. The inspection limitations schedule Table 2 summarizes the mandatory inspection interval in hours. The Certification Maintenance Requirements Table 3 summarizes the required scheduled maintenance tasks.

The airworthiness limitations of the PW207D1/D2 engines, as installed in the Model 429 helicopter and operated in accordance with the limitations specified in the Flight Manual (BHT-429-FM-1, Section 1), are covered in the applicable section of the PW207D1/D2 Maintenance Manual (P/N 3071602).

For the airworthiness limitations of installed kits not covered in this chapter, refer to the applicable Installation Instruction (II) or supplement in 429-MM, Chapter 99 of this manual.

NOTE

The airworthiness life given or the failure to give an airworthiness life to a component does not constitute a warranty of any kind. The only warranty applicable to the helicopter or any component is the warranty included in the Purchase Agreement for the helicopter or the component.

POST OFFICE BOX 482 • FORT WORTH, TEXAS 76101

The airworthiness lives and inspection intervals given to the components are determined through experience, engineering judgement, fatigue tests, and Lead-The-Fleet (LTF) programs. The airworthiness lives and inspection intervals cannot be changed without the approval of Transport Canada.

NOTE

It is the responsibility of the pilot to record the events in the helicopter log book. Normal landings, run-on landings, autorotation landings, normal retraction/extension, and emergency gear release of the wheeled landing gear system (if installed) are events that must be recorded separately.

It is the responsibility of the maintainer to assign RIN values to the recorded events, for the purpose of tracking the component lives.

Components sensitive to operational events, such as normal landings, run-on landings, autorotation landings, normal retraction/extension, and emergency gear release of the wheeled landing gear system (if installed) are assigned a maximum RIN. This number is based on the fatigue damage that results from these events. A new component begins with an accumulated RIN of zero and will increase as the helicopter is subject to events. The operator must record the number of events and increase the accumulated RIN as follows:

- For every one (1) normal landing, run-on landing, autorotation landing, normal retraction/extension, and emergency gear release of the wheeled landing gear system (if installed) you increase the accumulated RIN for the component by the applicable factor given in Table 1.

  Example: if a pilot performs one (1) normal landing and one (1) run-on landing, he must record one (1) occurrence of each event. Then the maintainer must increase the accumulated RIN for each affected component by the factor applicable to the component.

When a component reaches the maximum RIN indicated in Table 1, the component must be retired from service.

Prior to disposing of unsalvageable helicopter parts and materials, caution should be exercised to ensure that the parts and materials are disposed of in a manner that does not allow them to be returned to service.

Table 1. Airworthiness Limitations Schedule

NOMENCLATURE	PART NUMBER (1)	AIRWORTHINESS LIFE
	MAIN ROTOR	
CF Fitting	429-010-104-105	8000 hours
Grip Assembly	429-010-108-101	2500 hours
Grip Assembly	429-010-108-105	Unlimited
Drive Plate Assembly	429-010-109-101	10,000 hours
Mast Adapter Assembly	429-010-114-101	10,000 hours
Blade Bolt	429-010-119-101	10,000 hours
Centrifugal Force Bearing	429-310-003-103	8,000 RIN (18)
Expandable Blade Bolt	429-310-004-101	10,000 hours
	MAIN ROTOR CONTROLS	
Idler Link Assembly	430-010-409-105	10,000 hours
	TAIL ROTOR	
Hub Drive Coupling	429-012-120-101	15,000 hours
Tail Rotor Yoke Assembly	429-012-151-101	6000 hours
Tail Rotor Blade Assembly	429-016-101-105	5200 hours
Flapping Bearing, Outboard	429-312-103-111/-113/-117/-119	15,000 hours
Flapping Bearing, Inboard	429-312-103-109/-115	Unlimited
	TAIL ROTOR CONTROLS	
Idler Link Assembly	429-012-115-101	3500 hours
Idler Link Assembly	429-012-115-105	Unlimited
	DRIVE SYSTEM	

POST OFFICE BOX 482 • FORT WORTH, TEXAS 76101

Table 1. Airworthiness Limitations Schedule (continued)

NOMENCLATURE	PART NUMBER (1)	AIRWORTHINESS LIFE
Tail Rotor Output Shaft	429-042-102-101	20,000 hours
Tail Rotor Shaft Assembly	429-044-201-109	10,000 hours
PYLON SUPPORT		
Rod End Assembly	427-010-210-105	5000 hours
Pylon Beam Assembly, Left	429-010-201-101	8000 hours
Pylon Beam Assembly, Right	429-010-201-102	8000 hours
Pitch Restraint Spring Assembly	429-010-204-101	5000 hours
Transmission Top Case	429-040-203-101	*9400 hours*
Adapter, Left	429-040-225-101	15,000 hours
Adapter, Right	429-040-225-102	15,000 hours
Pitch Restraint Spring	429-310-201-105	5000 hours
SKID LANDING GEAR		
Skid Tube Assembly	429-700-101/-102	16,000 RIN (2) (3) (8) (9)
Skid Tube Assembly	429-030-586-107	16,000 RIN (2) (3) (8) (9)
Forward Crosstube Assembly	429-712-101	10,000 RIN (2) (3) (4) (5)
Aft Crosstube Assembly	429-723-108	30,000 RIN (2) (3) (6) (7)
FUSELAGE		
Roof Beam, Left	429-030-301-105	18,000 hours or 50,000 RIN (2)
Roof Beam, Right	429-030-302-105	18,000 hours or 50,000 RIN (2)
POWER PLANT		
Engines (Qty 2)	PW207D1/D2	(10)
ENGINE FIRE PROTECTION		
Primary Cartridge	30903962-1	10 years (11)
Secondary Cartridge	30903963-1	10 years (11)
FLOAT KIT (12)		
Float Inflation Cylinder	220373-0	15 years (11)
Life Raft Cylinder	221469-0	15 years (11)

POST OFFICE BOX 482 • FORT WORTH, TEXAS 76101

Table 1. Airworthiness Limitations Schedule (continued)

NOMENCLATURE	PART NUMBER (1)	AIRWORTHINESS LIFE
	HOIST KIT	
Cartridge, Cable Cutter	42315-281	5 years (11)
Cable, Rescue Hoist	42325-298	55 hoisting hours / 1500 hoist lifts / 4 years from cable installation (16)
	WHEELED LANDING GEAR KIT	
Forward Spar	429-031-213-103	30,000 RIN (13)
Forward Spar	429-031-213-104	30,000 RIN (13)
Main Landing Gear Actuator Fitting Assembly	429-031-222-101	19,000 RIN (14)
Main Landing Gear Actuator Fitting Assembly	429-031-222-102	19,000 RIN (14)
Main Landing Gear Actuator to Upper Side Stay Bolt	M084-20H125-101	50,000 RIN (15)
Main Landing Gear Actuator Fittings Bolts (8)	MS21250-05	19,000 RIN (14)
Main Landing Gear Actuator to Airframe Fitting Bolt	NAS6704D17	19,000 RIN (14)
Main Landing Gear Actuator	429-336-302-101	6000 RIN (15)
Nose Landing Gear Assembly	429-336-100-101	4500 hours or 50,000 RIN (15)
Nose Landing Gear Assembly	429-336-100-103	50,000 RIN (15)
Nose Landing Gear Actuator	429-336-301-101	6000 RIN (15) (17)

NOTES:

1 Airworthiness limitation for the part number listed applies to all successive dash numbers for the component, unless otherwise specified.

2 For every normal landing, you add 1 RIN to the previous total.

3 A run-on landing is defined as one where there is forward ground travel of the helicopter greater than 3 feet (0.91 m) with weight on skids.

4 For every one run-on landing, you add 50 RIN to the previous total.

5 For every one autorotation landing, you add 118 RIN to the previous total.

6 For every one run-on landing, you add 32 RIN to the previous total.

POST OFFICE BOX 482 • FORT WORTH, TEXAS 76101

Table 1. Airworthiness Limitations Schedule (continued)

	NOMENCLATURE	PART NUMBER (1)	AIRWORTHINESS LIFE
7	For every one autorotation landing, you add 186 RIN to the previous total.		
8	For every one run-on landing, you add 81 RIN to the previous total.		
9	For every one autorotation landing, you add 117 RIN to the previous total.		
10	Refer to the Airworthiness Limitations section of the PW207D1/D2 Maintenance Manual (P/N 3071602).		
11	Airworthiness life in years and months applies to shelf and operating time from date of manufacture.		
12	Refer to the BHT-429-II-38 for information on the applicability of the items listed to the specific float kit configuration installed on the helicopter.		
13	For every landing, you add 1 RIN to the previous total.		
14	For every normal retraction/extension of the wheeled landing gear system, you add 1 RIN to the previous total. For every emergency gear release of the wheeled landing gear system, you add 36 RIN to the previous total.		
15	For every normal retraction/extension of the wheeled landing gear system, you add 1 RIN to the previous total.		
16	The external hoist lift is defined as an unreeling and recovery of the cable with a load attached to the hook, independent of the length of the cable that is deployed/recovered. An unreeling /recovery of the cable with no load on the hook is not considered to be a lift. Any operation where a load of 30 pounds (14 kg) or greater is applied for operation (i.e., unreeling or recovery, cable conditioning) must be considered as one lift.		
17	The actuator must be overhauled at 2000 RIN and 4000 RIN. Overhaul is to be accomplished by Beaver Aerospace only. Return actuator to Bell Helicopter Textron (BHT) per IL GEN-04-98.		
18	When one or both engines are started, you add 1 RIN to the previous total.		

Table 2. Inspection Limitations Schedule

NOMENCLATURE	PART NUMBER (1)	INSPECTION INTERVAL
	MAIN ROTOR	
Main Rotor Yoke Assembly	429-010-103-101	50 hours (2)

NOTES:

1 Inspection limitation for the part number listed applies to all successive dash numbers for the component, unless otherwise specified.

2 Refer to Figure 1 for inspection details.

Table 3. Certification Maintenance Requirements

NOMENCLATURE	PART NUMBER (1)	INTERVAL
	WHEELED LANDING GEAR	
Wheeled Landing Gear System	429-705-001-101	800 hours or 1 year (2)
	KITS	
Float/Life Raft Kit	429-706-069-101	1600 hours (3)

POST OFFICE BOX 482 • FORT WORTH, TEXAS 76101

Table 3. Certification Maintenance Requirements (continued)

NOMENCLATURE	PART NUMBER (1)	INTERVAL
Hoist Kit	429-706-001-101	55 hoisting hours / 1100 flight hours (4)
		3 hoisting hours (5) (6)
		800 hours/12 months (7) (8)
		2220 flight hours (or 111 hoisting hours) (9)
		111 hoisting hours / 10 years (10)
		Before first use / 400 hoist lifts / 6 months (11)
		55 hoisting hours / 1666 hoist lifts / 60 months (12)

NOTES:

1 The maintenance interval for the part number listed applies to all successive dash numbers for the component, unless otherwise specified.

2 Do a functional check of the Emergency Gear Release (EGR) (429-MM, Chapter 99).

3 Carry out a functional check of the float/life raft kit (if installed) electrical system (429-MM, Chapter 99)to determine existence of possible dormant failures including: manual inflation switch, Water Immersion Switch (WIS) , auto-activation relay, manual activation relay, raft activation relay, test activation relay, and the fuse disc elements.

4 Carry out an operational check of the hoist cable anti-foul assembly (Goodrich Rescue Hoist System CMM 25-00-38-1, Testing and Fault Isolation Section).

5 Every 3 hoisting hours, clean and lubricate the rescue hoist cable (Goodrich Rescue Hoist System CMM 25-00-38-1, Cleaning Section).

6 Every 3 hoisting hours, visually examine the rescue hoist cable (Goodrich Rescue Hoist System CMM 25-00-38-1, Cleaning Section).

7 Every 800 hours or 12 months, carry out an operational check of the speed limit switches (Goodrich Rescue Hoist System CMM 25-00-38-1, Testing and Fault Isolation Section).

8 Carry out an operational check of the 600-pound external hoist electrical system (429-MM, Chapter 99) to verify operation of the HOIST HOT caution light.

9 Carry out a functional check of the cable cutter cartridge electrical system (429-MM, Chapter 99) to verify correct functioning of all cable cutter switches (hoist pendant, pilot cyclic, copilot cyclic) and associated wiring.

10 Carry out an overhaul of the rescue hoist assembly (Goodrich Rescue Hoist System CMM 25-00-38-1).

11 Perform hoist load check with field load check tool (Goodrich Rescue Hoist System CMM 25-00-38-1).

12 Carry out overload clutch overhaul (Goodrich Rescue Hoist System CMM 25-00-38-1).

POST OFFICE BOX 482 • FORT WORTH, TEXAS 76101

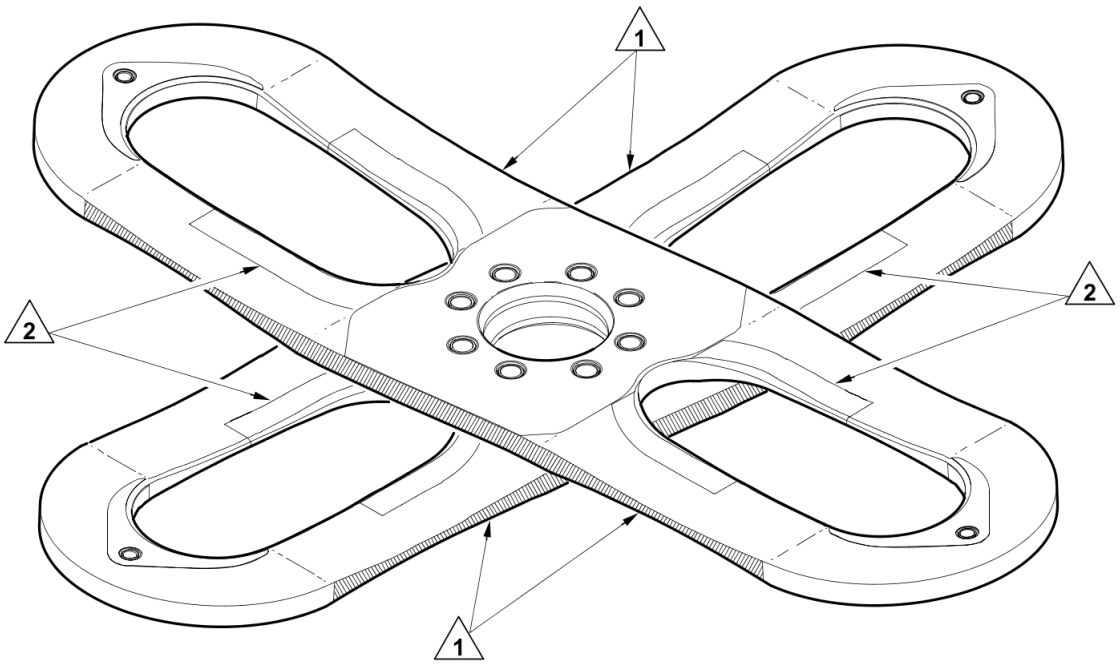

Inspection Procedure:

NOTE

This inspection may be accomplished with the main rotor yokes installed on the helicopter.

1. **Do a general visual inspection for cracks on all leading and trailing edges of the main rotor yokes in cross-hatched areas.**
2. **Do a general visual inspection of polyurethane protective tape for cracking, looseness, tearing, or peeling away from the main rotor yoke surfaces.**
3. **Refer to BHT-429-CMM, Chapter 62 for damage limits.**

ICN-429-A-040000-B-97499-00001-A-001-01

Figure 1. Main Rotor Yoke Assembly - Inspection (Sheet 1 of 1)

POST OFFICE BOX 482 • FORT WORTH, TEXAS 76101

Intentionally blank page

POST OFFICE BOX 482 • FORT WORTH, TEXAS 76101

CHAPTER 05
INSPECTIONS

MAINTENANCE PLANNING INFORMATION

POST OFFICE BOX 482 • FORT WORTH, TEXAS 76101

Intentionally blank page

POST OFFICE BOX 482 • FORT WORTH, TEXAS 76101

List of Effective Data Modules

The listed documents are included in issue 018, dated 2025-11-12, of this publication.

C = Changed data module, N = New data module

Document title	Data module code / Seq number		Issue date	Applicable to
Inspections - General	DMC-429-A-05-00-00-00A-028A-A / 00012		2024-05-31	ALL
Scheduled Inspections - General	DMC-429-A-05-40-00-00A-028A-A / 00013		2024-02-22	ALL
Scheduled Inspections - 50-Hour or 1-Month Inspection	DMC-429-A-05-40-00-00A-281A-A / 00014		2022-12-15	ALL
Scheduled Inspections - 50-Hour Inspection	DMC-429-A-05-40-00-01A-281A-A / 00015		2025-04-24	ALL
Scheduled Inspections - 200-Hour or 12-Month Inspection	DMC-429-A-05-40-00-02A-281A-A / 00016	C	2025-11-12	ALL
Scheduled Inspections - 200-Hour Inspection	DMC-429-A-05-40-00-35A-281A-A / 00017	C	2025-11-12	ALL
Scheduled Inspections - 400-Hour Inspection	DMC-429-A-05-40-00-30A-281A-A / 00018		2020-07-27	ALL
Scheduled Inspections - 600-Hour or 12-Month Inspection	DMC-429-A-05-40-00-04A-281A-A / 00019		2025-04-24	ALL
Scheduled Inspections - 800-Hour Inspection	DMC-429-A-05-40-00-31A-281A-A / 00020		2025-10-27	ALL
Scheduled Inspections - 800-Hour or 12-Month Inspection	DMC-429-A-05-40-00-05A-281A-A / 00021		2025-04-24	ALL
Scheduled Inspections - 800-Hour or 24-Month Inspection	DMC-429-A-05-40-00-06A-281A-A / 00022		2019-01-10	ALL
Scheduled Inspections - 1200-Hour Inspection	DMC-429-A-05-40-00-06A-281C-A / 00023		2019-01-10	ALL
Scheduled Inspections - 1600-Hour or 2-Year Inspection	DMC-429-A-05-40-00-07A-281A-A / 00024		2020-07-15	ALL
Scheduled Inspections - 3000-Hour Inspection	DMC-429-A-05-40-00-00A-281D-A / 00024.1		2022-12-12	ALL
Scheduled Inspections - 12-Month Inspection	DMC-429-A-05-40-00-08A-281A-A / 00026		2023-08-24	ALL
Scheduled Inspections - 2-Year Inspection	DMC-429-A-05-40-00-09A-281A-A / 00027		2024-02-22	ALL
Scheduled Inspections - 3-Year Inspection	DMC-429-A-05-40-00-10A-281A-A / 00028		2020-07-15	ALL
Scheduled Inspections - 4-Year Inspection	DMC-429-A-05-40-00-11A-281A-A / 00029		2025-04-24	ALL
Scheduled Inspections - 5-Year Inspection	DMC-429-A-05-40-00-12A-281A-A / 00030		2020-07-15	ALL
Scheduled Inspections - 6-Year Inspection	DMC-429-A-05-40-00-13A-281A-A / 00031		2025-10-27	ALL
Scheduled Inspections - 7-Year Inspection	DMC-429-A-05-40-00-13A-281C-A / 00032		2019-01-10	ALL
Scheduled Inspections - 8-Year Inspection	DMC-429-A-05-40-00-14A-281A-A / 00033		2025-04-24	ALL
Scheduled Inspections - 10-Year Inspection	DMC-429-A-05-40-00-15A-281A-A / 00034		2025-04-24	ALL

POST OFFICE BOX 482 • FORT WORTH, TEXAS 76101

Document title	Data module code / Seq number	Issue date	Applicable to
Scheduled Inspections - 12-Year Inspection	DMC-429-A-05-40-00-15A-281C-A / 00035	2023-08-24	ALL
Scheduled Inspections - 5000-Hour Inspection	DMC-429-A-05-40-00-16A-281A-A / 00036	2020-07-15	ALL
Scheduled Inspections - 6000-Hour Inspection	DMC-429-A-05-40-00-17A-281A-A / 00037	2019-01-10	ALL
Scheduled Inspections - 8000-Hour Inspection	DMC-429-A-05-40-00-18A-281A-A / 00038	2021-04-15	ALL
Scheduled Inspections - 10,000-Hour Inspection	DMC-429-A-05-40-00-19A-281A-A / 00039	2025-04-24	ALL
Scheduled Inspections - 15,000-Hour or 15-Year Inspection	DMC-429-A-05-40-00-20A-281A-A / 00040	2025-04-24	ALL
Scheduled Inspections - 1600 Flight Cycle Inspection	DMC-429-A-05-40-00-32A-281A-A / 00041	2020-07-15	ALL
Scheduled Inspections - 5000 RIN Inspection	DMC-429-A-05-40-00-21A-281A-A / 00042	2019-01-10	ALL
Scheduled Inspections - Miscellaneous Inspection	DMC-429-A-05-40-00-22A-281A-A / 00043	2020-07-15	ALL
Special Inspections - General	DMC-429-A-05-50-00-00A-028A-A / 00044	2019-01-10	ALL
Special Inspections - Torque/Friction Check	DMC-429-A-05-50-00-00A-283A-A / 00045	2024-05-31	ALL
Special Inspections - Opportunity Inspections - Component Removal	DMC-429-A-05-50-00-01A-283A-A / 00046	2020-07-15	ALL
Conditional Inspections - General	DMC-429-A-05-50-00-01A-028A-A / 00047	2019-01-10	ALL
Conditional Inspections - Hard Landing	DMC-429-A-05-50-00-00A-284A-A / 00048	2020-07-15	ALL
Conditional Inspections - Sudden Stoppage (Main Rotor) Power ON or OFF	DMC-429-A-05-50-00-01A-284A-A / 00049	2020-07-15	ALL
Conditional Inspections - Sudden Stoppage (Tail Rotor) Power ON or OFF	DMC-429-A-05-50-00-02A-284A-A / 00050	2020-07-15	ALL
Conditional Inspections - Main Rotor Overspeed	DMC-429-A-05-50-00-03A-284A-A / 00051	2020-07-15	ALL
Conditional Inspections - Overtorque	DMC-429-A-05-50-00-04A-284A-A / 00052	2020-07-15	ALL
Conditional Inspections - One Engine Inoperative (OEI)	DMC-429-A-05-50-00-05A-284A-A / 00053	2019-01-10	ALL
Conditional Inspections - One Engine Inoperative (OEI) Limit Override	DMC-429-A-05-50-00-06A-284A-A / 00054	2020-07-15	ALL
Conditional Inspections - Compressor Stall or Surge	DMC-429-A-05-50-00-07A-284A-A / 00055	2020-07-15	ALL
Conditional Inspections - Lightning Strike	DMC-429-A-05-50-00-08A-284A-A / 00056	2020-07-15	ALL
Conditional Inspections - Water Immersion	DMC-429-A-05-50-00-09A-284B-A / 00057	2019-01-10	ALL
Conditional Inspections - Flight Through Hail	DMC-429-A-05-50-00-10A-284A-A / 00058	2020-07-15	ALL
Conditional Inspections - Tail Rotor Blade Handling Damage	DMC-429-A-05-50-00-11A-284A-A / 00059	2019-01-10	ALL

Document title	Data module code / Seq number	Issue date	Applicable to
Scheduled Component Inspections - General	DMC-429-A-05-40-00-01A-028A-A / 00060	2024-04-24	ALL
Scheduled Components Inspections - 1000-Hour Inspection	DMC-429-A-05-40-00-29A-281A-A / 00061	2022-12-12	ALL
Scheduled Component Inspections - 5000-Hour Inspection	DMC-429-A-05-40-00-23A-281A-A / 00062	2020-09-25	ALL

POST OFFICE BOX 482 • FORT WORTH, TEXAS 76101

Intentionally blank page

POST OFFICE BOX 482 • FORT WORTH, TEXAS 76101

Inspections - General

WARNING

THE MODEL 429 HELICOPTER CONTAINS CRITICAL PARTS. FAILURE OF THESE PARTS DURING GROUND OR FLIGHT OPERATIONS CAN HAVE A CATASTROPHIC EFFECT ON THE HELICOPTER. CARE MUST BE TAKEN DURING MAINTENANCE, INSPECTION, REPAIR, TRANSPORTATION, AND STORAGE OF THE CRITICAL PARTS THAT ARE REMOVED AND INSTALLED. REFER TO 429-MM, CHAPTER 1 FOR ADDITIONAL INFORMATION AND REQUIREMENTS RELATED TO CRITICAL PARTS.

This chapter provides all of the time limit intervals and requirements for scheduled inspections, scheduled component inspections, special inspections, and conditional inspections applicable to the Model 429 helicopter.

The inspection intervals provided in this chapter are applicable only to Bell Helicopter Textron (BHT) approved parts. The owner/operator is responsible for increasing the scope and frequency of the inspections as necessary to make sure the helicopter is operated safely during all unusual local changes, such as environmental conditions, helicopter use, etc. Contact your local aviation authority to request changes to the requirements in this chapter.

NOTE

The component inspection interval (or the failure to provide an inspection interval for a component) does not constitute a warranty of any kind. The only warranty applicable to the helicopter or any component is the warranty included in the Purchase Agreement for the helicopter or the component.

The inspection intervals have been determined by use of the Maintenance Steering Group – 3rd Task Force (MSG-3) methodology (429-A-05-40-00-00A-028A-A / 00013). Changes to the inspection intervals will also follow the MSG-3 process and will be introduced by a revision to the Initial Maintenance Requirements Report (IMRR) , which will then be incorporated into this chapter.

Calendar and hourly inspections are thorough visual inspections to determine the airworthiness of the helicopter and its components. Qualified persons must do the inspections per the quality standard aircraft practices and the applicable maintenance manuals. Bell Textron considers that it is mandatory to obey all applicable Alert Service Bulletins (ASB) and Airworthiness Directives (AD) .

Component operating time records are necessary for components that have scheduled maintenance procedures that are different from those of the airframe. It is the responsibility of the owner/operator to update the Historical Service Records (HSR) for the applicable component and to do the necessary maintenance procedures.

For the inspection requirements of installed Bell Textron kits not covered in this chapter, refer to the applicable Installation Instruction (II) or supplement in 429-MM, Chapter 99.

All of the necessary access panels, covers, doors, cowlings, etc. to be removed or opened for each inspection are provided in this chapter. Refer to 429-MM, Chapter 6 to identify and locate each of these and refer to 429-MM, Chapter 52 or 429-MM, Chapter 53, as applicable, for the removal and installation procedures.

8. Inspections - Exceptions

This manual does not include intervals for specific inspections such as the compass calibration, pitot static test, etc. These specific inspection intervals are provided by your government regulatory authority. Refer to their requirements for these specific inspections.

9. Inspections - Responsibilities

The owner/operator of the helicopter is responsible for the maintenance done on the helicopter. It is the owner/operator's responsibility to:

Establish, maintain, and review the log books for discrepancies.

Make sure all of the ASB, AD, and special inspections are completed when required.

NOTE

Refer to the applicable Installation Instruction (II) or supplement in 429-MM, Chapter 99 of this manual for the kits not covered in this chapter.

Make sure the scheduled inspections, special inspections, and required tests for all of the installed kits are complied with.

Make sure all parts and components for which HSR are required have documented traceability to their original installation in the helicopter.

Make sure all limited life parts that have completed their published operating limits are replaced.

Make sure all components that have completed their published inspection intervals are inspected.

NOTE

The owner/operator may choose to ask the maintenance organization/person doing the maintenance to perform the tasks listed by prior arrangement through a separate formal agreement.

Make sure all of the maintenance required on the helicopter is done by an approved maintenance organization. This maintenance organization/person is responsible for the quality of the maintenance done.

10. Inspections - Crash Damage

Because of the many possible combinations that can result from crash damage, it is not possible to include all specific repair tasks in this category. Evaluate the crash damage for each situation and do the repair per the degree of damage to the specific part or component using the applicable repair procedures in this manual or other applicable manuals. It is recommended to contact Product Support Engineering for assistance with crash damage evaluation.

11. Inspections - Types of Inspections

Inspection requirements contained in this chapter include scheduled inspections, scheduled component inspections, special inspections, and conditional inspections. These are as follows:

Scheduled inspections occur at specified intervals of helicopter operating time. These intervals may be in flight time (hours), cycles, flight cycles, torque events (Retirement Index Number (RIN)), calendar time (days, months, years) or other assigned units. This makes sure that the helicopter is airworthy.

Scheduled component inspections occur at specified intervals of component operating time. When specified intervals are reached, the component must be removed from the helicopter and restored or replaced, as applicable.

Special inspections are of a temporary nature (e.g., opportunity inspections, etc.) or occur at special intervals that are not consistent with the scheduled inspections.

Conditional inspections do not occur at a specified time. They are conducted based on the result of known or suspected unusual events, known or suspected malfunctions, or defects.

Lubrication and servicing requirements are in addition to those stated in this chapter (429-MM, Chapter 12).

Inspection requirements contained in this chapter provide for corrosion control in normal operating environments or inside typical environmental conditions. If the helicopter is operated in an area that is conducive to corrosion, refer to the CSSD-PSE-87-001, Corrosion Control Guide and the BHT-ALL-SPM, Chapter 3, Standard Practices Manual for additional information on corrosion control guidelines. For operations outside of typical environmental conditions the operator should contact Product Support Engineering and refer to the CSSD-PSE-87-001, Corrosion Control Guide and the BHT-ALL-SPM, Chapter 3, Standard Practices Manual for additional information on corrosion control guidelines refer to corrosion control guide Annex A-2.

NOTE

The PW207D1/D2 Maintenance Manual (P/N 3071602) includes all of the instructions for continued airworthiness for the PW207D1/D2 engines, as installed in the Model 429 helicopter and operated per the limitations contained in the Flight Manual (BHT-429-FM-1, Section 1, Flight Manual).

Scheduled maintenance checks, unscheduled maintenance checks, and time between overhaul for the PW207D1/D2 engines are in addition to those stated in this chapter. Refer to the PW207D1/D2 Maintenance Manual (P/N 3071602).

Inspection requirements for the common optional equipment, approved by Bell Textron, are covered in this chapter. Inspection requirements for all other optional equipment, approved by Bell Textron, are covered in the applicable II or supplement in 429-MM, Chapter 99.

Inspection requirements for optional equipment approved under Supplement Type Approval/Certificate (STA/STC) are covered in the applicable STA/STC documentation. Maintenance and inspection of these items are the responsibility of the owner/operator.

POST OFFICE BOX 482 • FORT WORTH, TEXAS 76101

12. Inspections - Terminology

Refer to 429-MM, Chapter 1 for definitions of the technical terms used in this chapter.

POST OFFICE BOX 482 • FORT WORTH, TEXAS 76101

Intentionally blank page

POST OFFICE BOX 482 • FORT WORTH, TEXAS 76101

Scheduled Inspections - General

Bell Textron Inc (Bell) has applied the Maintenance Steering Group - 3rd Task Force (MSG-3) methodology to develop the scheduled maintenance/inspection program of the Model 429 helicopter. The resulting scheduled inspections are designed to improve reliability and helicopter availability while reducing maintenance costs.

To supply additional detail on the process, MSG-3 Revision 2005 was used to develop the initial scheduled maintenance/inspection program in conjunction with a Customer Maintenance Advisory Panel (CMAP) . To ensure a diverse knowledge base, various helicopter operational environments were used, the CMAP team was comprised of experienced helicopter maintainers from around the world as well as regulatory specialists from Transport Canada Civil Aviation (TCCA) , the Federal Aviation Administration (FAA) , the European Aviation Safety Agency (EASA) , Product Support Engineering (PSE) , and other specialists from Bell.

The MSG-3 process supplies individual maintenance programs for the helicopter system inspections, structure inspections, zonal inspections, and enhanced zonal inspections as follows:

- The systems program develops maintenance/inspection tasks based on MSG-3 systems analysis.
- The structures program develops specific, directed inspection tasks of each structural significant item based on MSG-3 structural analysis.
- The zonal program develops general visual inspection tasks of system installations and structure on a zone by zone basis of the helicopter.
- The enhanced zonal program develops general visual inspection and detailed inspection tasks of the helicopters Electrical Wiring Interconnection System (EWIS) .

At the completion of all of the required MSG-3 analysis, the maintenance/inspection tasks were compiled into the Initial Maintenance Requirements Report (IMRR) . The information contained within the IMRR is based on the basic type certificate of the helicopter, including all Bell kits. Supplemental Type Certificates (STC's) or modifications/installations performed by the operator are not taken into account.

The information contained within the IMRR was then used to create the scheduled inspections within 429-A-05-00-00-00A-009A-A / 00011. Six digit task numbers (i.e., 623009) are supplied in the data reference column of the various scheduled inspections within 429-A-05-00-00-00A-009A-A / 00011. These task numbers align with the inspection tasks developed as part of the MSG-3 process and can be referenced in the IMRR. Although use of the task numbers and cross referencing back to the IMRR for task information is not a requirement to conduct the inspection tasks supplied in 429-A-05-00-00-00A-009A-A / 00011, the information is supplied to ensure traceability to the source document where the task was developed.

As the IMRR is a "living document" subject to regular review, the scheduled inspections supplied in 429-A-05-00-00-00A-009A-A / 00011 of this manual will be updated at the approval of any revision to the IMRR. Revisions to the scheduled maintenance program through modification of the IMRR may be started by industry, the CMAP, or Bell. These revisions may result from service experience, manufacturers test data, analysis, changes in configuration or standard options, and/or changes to the policies or methods by which the maintenance tasks are derived.

NOTE

Refer to 429-A-05-40-00-01A-028A-A / 00060 for the scheduled inspections that occur at specified intervals of the component operating time.

The scheduled inspections contained in the inspection program include all of the airframe, component, zonal, and Bell optional equipment kit inspections for which the interval is based on airframe or component operating time, as applicable.

NOTE

The PW207D1/D2 Maintenance Manual (P/N 3071602) includes all of the instructions for continued airworthiness for the PW207D1/D2 engines, as installed in the Model 429 helicopter and operated in accordance with the limitations contained in the Flight Manual (BHT-429-FM-1, Section 1).

Refer to the PW207D1/D2 Maintenance Manual (P/N 3071602) for the scheduled maintenance checks of the engines.

9. Scheduled Inspections —Types of Scheduled Inspections

Other than the servicing requirements stated in the scheduled inspection program, the program consists of scheduled inspections which can be general visual inspections or detailed inspections, as required.

POST OFFICE BOX 482 • FORT WORTH, TEXAS 76101

9.1. Types of Scheduled Inspections — General Visual Inspections

This level of inspection is made from within touching distance, unless specified. A mirror may be necessary to enhance visual access to all exposed surfaces in the inspection area. The inspection is made under normally available lighting conditions such as daylight, hangar lighting, flashlight, or drop-light and may require to open or remove access panels and doors. Stands, ladders, or platforms may be required to gain proximity to the area being checked.

9.2. Types of Scheduled Inspections — Detailed Inspections

Available lighting is normally supplemented with a direct source of good lighting at an intensity deemed appropriate. Inspections aids such as mirrors, magnifying lenses, etc. may be necessary. The examination is likely to make extensive use of specialized inspection techniques and/or equipment. Intricate cleaning and substantial access or disassembly procedures may be required.

10. Scheduled Inspections — Zonal Inspections

NOTE

Refer to 429-MM, Chapter 6 for the identification and complete description of the zones.

The zonal inspections are General Visual Inspections (GVI) which are part of the scheduled inspection program of the helicopter. These inspections ensure that all systems, power plant installations, components, structures, and EWIS are sufficiently visually examined for correct installation and general condition.

The zonal inspections must be done within arms-reach distance. The only inspection aids necessary are a flashlight and a mirror. You must remove the seats, carpets, access panels, covers, doors, cowlings, etc. in the zone, as necessary, to complete the inspection. You must sufficiently lift the insulation material to do the structural inspection when necessary.

When performing a zonal inspection, address any equipment, metallic or composite structure, and/or wiring installations in the zone, as applicable, paying particular attention to the following items, as shown in Table 1 through Table 3.

11. Scheduled Inspections — Optional Equipment Inspections

NOTE

Scheduled optional equipment inspections are established for optional Bell kits requiring scheduled inspections to ensure continuing airworthiness.

Perform and record the scheduled optional equipment inspections as applicable.

12. Scheduled Inspections — Interval Tolerance

WARNING

DO NOT APPLY THESE TOLERANCES TO PARTS WITH A LIMITED AIRWORTHINESS LIFE (429-A-04-00-00-00A-009A-A / 00007).

The Bell approved tolerance for scheduled inspections, special inspections, and overhaul intervals, unless specified, is 10% or up to a maximum of 100 hours operating time/30 days calendar time, whichever is less. The tolerances are established for maintenance scheduling convenience only.

Scheduled inspections, special inspections, or scheduled components inspections required beyond the stated tolerances must be approved by PSE.

The approval of an inspection interval tolerance by a governing aviation authority is the responsibility of the owner/operator. Please contact your governing aviation authority to request a scheduled inspection interval tolerance. The tolerance would be established for maintenance scheduling convenience only. If a tolerance is applied, the subsequent inspection interval will be adjusted to re-establish the original inspection schedule.

Refer to the PW207D1/D2 Maintenance Manual (P/N 3071602) for inspection and overhaul tolerances. When an inspection is completed early, subsequent inspections will be advanced as required to not be more than the scheduled inspection interval. The following supply examples of when an hourly inspection and calendar inspection are completed early:

POST OFFICE BOX 482 • FORT WORTH, TEXAS 76101

Table 1. Hourly Example:

200-HOUR INSPECTION DUE AT:	INSPECTION CARRIED OUT AT:	NEXT 200-HOUR INSPECTION DUE AT:
3400 Hours	3390 Hours (completed early)	3590 Hours
3590 Hours	3585 Hours (completed early)	3785 Hours
3785 Hours	3785 Hours	3985 Hours

Table 2. Calendar Example:

12-MONTH INSPECTION DUE ON:	INSPECTION CARRIED OUT ON:	NEXT 12-MONTH INSPECTION DUE ON:
June 10, 2010	June 1, 2010 (completed early)	June 1, 2011 (1)
June 1, 2011	May 15, 2011 (completed early)	May 15, 2012 (1)
May 15, 2012	May 15, 2012	May 15, 2013 (1)
NOTE: 1 The 429 maintains the calendar day that the previous inspection was completed.		

13. Scheduled Inspections — Inspection Program

To complete the inspection program of the helicopter, perform and record all of the following inspections:

- 50-hour or 1-month inspection (429-A-05-40-00-00A-281A-A / 00014).

  Complete the scheduled inspection every 50 hours of operating time or one month, whichever occurs first.
- 200-hour or 12-month inspection (429-A-05-40-00-02A-281A-A / 00016).

  Complete the inspection every 200 hours of operating time or 12 months, whichever occurs first.
- 600-hour or 12-month inspection (429-A-05-40-00-04A-281A-A / 00019).

  Complete the inspection every 600 hours of operating time or 12 months, whichever occurs first.
- 800-hour or 12-month inspection (429-A-05-40-00-05A-281A-A / 00021).

  Complete the inspection every 800 hours of operating time or 12 months, whichever occurs first.
- 800-hours or 24-month inspection (429-A-05-40-00-06A-281A-A / 00022).

  Complete the inspection every 800 hours of operating time or 24 months, whichever occurs first.
- 1200-hours inspection (429-A-05-40-00-06A-281C-A / 00023).

  Complete the inspection every 1200 hours of operating time.
- 1600-hour or 2-year inspection (429-A-05-40-00-07A-281A-A / 00024).

  Complete the inspection every 1600 hours of operating time or two years, whichever occurs first.
- *3000-hour inspection (429-A-05-40-00-00A-281D-A / 00024.1).*

  Complete the inspection every 3000 hours of operating time.
- 12-month inspection (429-A-05-40-00-08A-281A-A / 00026).

  Complete the inspection every 12 months.
- 2-year inspection (429-A-05-40-00-09A-281A-A / 00027).

  Complete the inspection every two years.
- 3-year inspection (429-A-05-40-00-10A-281A-A / 00028).

  Complete the inspection every three years.
- 4-year inspection (429-A-05-40-00-11A-281A-A / 00029).

  Complete the inspection every four years.
- 5-year inspection (429-A-05-40-00-12A-281A-A / 00030).

Complete the inspection every five years.

- 6-year inspection (429-A-05-40-00-13A-281A-A / 00031).

Complete the inspection every six years.

- 7-year inspection (429-A-05-40-00-13A-281C-A / 00032).

Complete the inspection every seven years.

- 8-year inspection (429-A-05-40-00-14A-281A-A / 00033).

Complete the inspection every eight years.

- 10-year inspection (429-A-05-40-00-15A-281A-A / 00034).

Complete the inspection every 10 years.

- 12-year inspection (429-A-05-40-00-15A-281C-A / 00035).

Complete the inspection every 12 years.

- 50-hour inspection (429-A-05-40-00-01A-281A-A / 00015).

Complete the scheduled inspection every 50 hours of operating time.

- 400-hour inspection (429-A-05-40-00-30A-281A-A / 00018).

Complete the scheduled inspection every 400 hours of operating time.

- 800-hour inspection (429-A-05-40-00-31A-281A-A / 00020).

Complete the scheduled inspection every 800 hours of operating time.

- Delete
- 5000-hour inspection (429-A-05-40-00-16A-281A-A / 00036).

Complete the inspection every 5000 hours of operating time.

- 6000-hour inspection (429-A-05-40-00-17A-281A-A / 00037).

Complete the inspection every 6000 hours.

- 8000-hour inspection (429-A-05-40-00-18A-281A-A / 00038).

Complete the scheduled inspection every 8000 hours.

- 10,000-hour inspection (429-A-05-40-00-19A-281A-A / 00039).

Complete the inspection every 10,000 hours of operating time.

- 15,000-hour or 15-year inspection (429-A-05-40-00-20A-281A-A / 00040).

Complete the inspection every 15,000 hours of operating time or 15 years, whichever occurs first.

- 1600 Flight Cycle inspection (429-A-05-40-00-32A-281A-A / 00041).

Complete the scheduled inspection every 1600 Flight Cycle.

- 5000 RIN inspection (429-A-05-40-00-21A-281A-A / 00042).

Complete the inspection every 5000 RIN.

- Miscellaneous inspection (429-A-05-40-00-22A-281A-A / 00043).

Complete the inspection at the applicable interval(s). Refer to your government regulatory authority for the requirements.

Table 1. Zonal Inspections — Mechanical Assemblies/Systems and Structure

ITEM	DEFECT, DAMAGE, FAILURE, OR IRREGULARITY
Mechanical assemblies/systems and structure	Cleanliness
	Damage, cracks, deterioration of protection treatment, and corrosion
	Wear, chafing, dents, distortion, fouling, bending, scoring, and fraying
	Loose, damaged, or missing fasteners
	Fluid leakage

Table 1. Zonal Inspections — Mechanical Assemblies/Systems and Structure (continued)

ITEM	DEFECT, DAMAGE, FAILURE, OR IRREGULARITY
	Correct operation of drain holes (i.e., no blockage or obstruction)
	Moisture accumulation
	Correct installation and security of control rods and bellcranks
	Correct installation of wiring harnesses, electrical bonding, ground studs, and tubing
	Correct installation of connectors and backshells. (e.g., no red witness bands are visible)
	Correct installation of connectors and backshells with other forms of Lightning and High Intensity Radiated Frequency (L/HIRF) protection

Table 2. Zonal Inspections — Composite Structure

ITEM	DEFECT, DAMAGE, FAILURE, OR IRREGULARITY
Composite structure	Cleanliness
	Discoloration (due to overheating)
	Delamination and voids
	Foreign matter, signs of scratches, crazing, cracks, dents, and pitting
	Air bubbles, blisters, porosity, orange peeling, and wrinkles

Table 3. Zonal Inspections — Electrical Wire Interconnection System (EWIS)

ITEM (1)	DEFECT, DAMAGE, FAILURE, OR IRREGULARITY
Wire/wire harnesses	Wire bundle/wire bundle or wire bundle/structure contact/chafing
	Wire bundle sagging or incorrectly secured
	Wires damaged (obvious damage due to mechanical impact, overheat, localized chafing, etc.)
	Lacing tape and/or ties missing/incorrectly installed
	Wiring protection sheath/conduit deformity or incorrectly installed
	End of sheath rubbing on end attachment device
	Grommet missing or damaged
	Dust and lint accumulation
	Surface contamination by metal shavings/swarf
	Contamination by liquids
	Deterioration of previous repairs (e.g., splices)
	Deterioration of production splices
	Inappropriate repairs (e.g., incorrect splice)
	Inappropriate attachments to or separation from fluid lines
Connectors	External corrosion on receptacles
	Missing/loose or damaged dust cap
	Backshell tail broken
	Rubber pad or packing on backshell missing
	Missing sealant to prevent corrosion between connector and mounting interface for shielded assemblies
	No backshell wire securing device
	Fool proofing chain broken

POST OFFICE BOX 482 • FORT WORTH, TEXAS 76101

Table 3. Zonal Inspections — Electrical Wire Interconnection System (EWIS) (continued)

ITEM (1)	DEFECT, DAMAGE, FAILURE, OR IRREGULARITY
	Missing or broken safety wire
	Loose swing arm backshell screws or missing screw
	Discoloration/evidence of overheating on terminal lugs/blocks
	Torque stripe misalignment
Switches	Rear protection cap damaged
	Incorrect strain on wire connections
Ground points	Corrosion and looseness
	Missing sealant to prevent corrosion between grounding device and mounting interface for shielded assemblies
Bonding braid/bonding jumper	Braid broken or disconnected
	Multiple strands corroded or broken
Wiring clamps or brackets	Corroded
	Broken/missing
	Bent or twisted
	Defective attachment (bad attachment or fastener missing)
	Debonded/detached
	Protection/cushion damaged
Supports (rails or tubes/conduit)	Broken
	Deformed
	Fastener missing
	Missing edge protection on rims of feed through holes
	Racetrack cushion damaged
	Blocked drainage holes (in conduits)
Circuit breakers, contactors, or relays	Signs of overheating
	Missing terminal protective device
	Signs of arcing
	Looseness

NOTE:

1 For specific electrical maintenance information and procedures, refer to the BHT-ELEC-SPM, Electrical Standard Practices Manual and 429-MM, Chapter 96 of this manual. These locations will supply the data necessary to repair and replace wires, cables, and electrical components. In specific regards to electrical bonding requirements and unless specified, the Class R-II value of less than 10 milliohms is to be utilized on the Model 429.

POST OFFICE BOX 482 • FORT WORTH, TEXAS 76101

Scheduled Inspections - 50-Hour or 1-Month Inspection

Table 1. Scheduled Inspections — 50-Hour or 1-Month Inspection

DATA REFERENCE/IMRR TASK NUMBER	TASK DESCRIPTION	ACCESS	ZONES	INITIAL MECH	INITIAL OTHER
	DATE: _____W.O.				
	FACILITY:				
	HELICOPTER S/N:				
	REGISTRY NO.:				
	TOTAL TIME:				
	SIGNATURE:				
	NOTE To be performed every 50 hours of operating time or 1 month, whichever occurs first.				
	GENERAL				
	1. Review helicopter log book and ensure all recorded discrepancies have been corrected.				
	2. Ensure compliance with all applicable airworthiness directives.				
429-A-04-00-00-00A-009A-A / 00007	3. Ensure life limited parts do not exceed service life.				
429-MM, Chapter 12	4. Ensure all required lubrication tasks have been performed.				
429-A-05-40-00-22A-281A-A / 00043	5. Ensure all required miscellaneous inspections have been performed, as applicable.				
429-MM, Chapter 99	6. Ensure all required inspections of installed BHT kits not covered in this inspection have been performed, as applicable.				
	7. Record accomplishment of this inspection in the helicopter log book.				
	PREPARATION TASKS				
	None				
	WHEELED LANDING GEAR SYSTEM				
	Wheeled Landing Gear: Installed:				
429-MM, Chapter 53 323002	Wheeled Landing Gear: Installed: 1. Do a detailed inspection of the nose and main landing gear door hinges, if installed. Applies only to helicopters S/N 57001 through 57213 that have not complied with Part III of ASB 429-15-17.	N/A	314, 319, 320		
	FIRE PROTECTION				
	1. Deleted				
	2. Deleted				
	COMPLETION TASKS				
	None				

POST OFFICE BOX 482 • FORT WORTH, TEXAS 76101

Intentionally blank page

POST OFFICE BOX 482 • FORT WORTH, TEXAS 76101

Scheduled Inspections - 50-Hour Inspection

Table 1. Scheduled Inspections - 50-Hour Inspection

DATA REFERENCE/IMRR TASK NUMBER	TASK DESCRIPTION	ACCESS	ZONES	INITIAL	
				MECH	OTHER
	DATE: _____W.O.				
	FACILITY:				
	HELICOPTER S/N:				
	REGISTRY NO.:				
	TOTAL TIME:				
	SIGNATURE:				
	NOTE To be performed every 50 hours of operating time.				
	GENERAL				
429-A-04-00-00-00A-009A-A / 00007	1. Make sure that life limited parts do not exceed service life.				
429-MM, Chapter 12	2. Make sure that all necessary lubrication tasks have been performed.				
429-A-05-40-00-22A-281A-A / 00043	3. Make sure that all necessary miscellaneous inspections have been performed, as applicable.				
429-MM, Chapter 99	4. Make sure that all necessary inspections of installed BHT kits not covered in this inspection have been performed, as necessary.				
	5. Record accomplishment of this inspection in the helicopter log book.				
	PREPARATION TASKS				
	1. None				
	FLIGHT CONTROLS				
429-MM, Chapter 67 643007	1. Do a detailed inspection of the tail rotor pitch link assemblies (429-012-112-111 and 429-012-112-113).	N/A	510		
	COMPLETION TASKS				
	1. None				

POST OFFICE BOX 482 • FORT WORTH, TEXAS 76101

Intentionally blank page

POST OFFICE BOX 482 • FORT WORTH, TEXAS 76101

Scheduled Inspections - 200-Hour or 12-Month Inspection

Deleted.

POST OFFICE BOX 482 • FORT WORTH, TEXAS 76101

Intentionally blank page

POST OFFICE BOX 482 • FORT WORTH, TEXAS 76101

Scheduled Inspections - 200-Hour Inspection

Procedure

Table 1. Scheduled Inspections - 200-Hour Inspection

DATA REFERENCE/IMRR TASK NUMBER	TASK DESCRIPTION	ACCESS	ZONES	INITIAL	
				ME-CH	OTH-ER
	DATE: _____W.O.				
	FACILITY:				
	HELICOPTER S/N:				
	REGISTRY NO.:				
	TOTAL TIME:				
	SIGNATURE:				
	NOTE To be performed every 200 hours of operating time.				
	GENERAL				
	1. Review helicopter log book and make sure that all recorded discrepancies have been corrected.				
	2. Do all necessary airworthiness directives.				
429-A-04-00-00-00A-009A-A / 00007	3. Make sure that life limited parts do not exceed service life.				
429-MM, Chapter 12	4. Do all necessary lubrication tasks.				
429-A-05-40-00-22A-281A-A / 00043	5. Do all miscellaneous inspections, as necessary.				
429-MM, Chapter 99	6. Do all inspection tasks for installed BHT kits not included in this inspection, as necessary.				
	7. Record accomplishment of this inspection in the helicopter log book.				
	PREPARATION TASKS				
429-MM, Chapter 53	*1. Remove fairing 500G.*	*500G*	*510*		
	MAIN ROTOR				
429-MM, Chapter 12 *623001*	*1. Lubricate the swashplate assembly duplex bearing.*	*N/A*	*611*		
	MAIN ROTOR SYSTEM				
429-MM, Chapter 62 *623018A*	*1. Do a detailed inspection of the swashplate duplex bearing for rotational smoothness.*	*N/A*	*611*		
	TAIL ROTOR SYSTEM				
429-MM, Chapter 64 *642010*	*1. Do a torque check of the tail rotor mast nut.*	*N/A*	*510*		
	FLIGHT CONTROLS				
429-MM, Chapter 67 *643004A*	*1. Do a detailed inspection of the tail rotor pitch change trunnion bearing for rotational smoothness.*	*500G*	*510*		

POST OFFICE BOX 482 • FORT WORTH, TEXAS 76101

Table 1. Scheduled Inspections - 200-Hour Inspection (continued)

DATA REFERENCE/IMRR TASK NUMBER	TASK DESCRIPTION	ACCESS	ZONES	INITIAL	
				ME-CH	OTH-ER
429-MM, Chapter 67 643010	**NOTE** For pitch link assemblies (429-012-212-105 and 429-012-212-107), the first inspection occurs at 400 flight hours, and subsequent inspection occurs every 200 hours. 2. Do a detailed inspection of the tail rotor pitch link assemblies (429-012-212-105 and 429-012-212-107).	N/A	510		
	COMPLETION TASKS				
429-MM, Chapter 53	*1. Install fairing 500G.*	*500G*	*510*		

POST OFFICE BOX 482 • FORT WORTH, TEXAS 76101

Scheduled Inspections - 400-Hour Inspection Procedure

Table 1. Scheduled Inspections — 400-Hour Inspection

DATA REFERENCE/IMRR TASK NUMBER	TASK DESCRIPTION	ACCESS	ZONES	INITIAL MECH	INITIAL OTHER
	DATE: _____W.O.				
	FACILITY:				
	HELICOPTER S/N:				
	REGISTRY NO.:				
	TOTAL TIME:				
	SIGNATURE:				
	NOTE To be performed every 400 hours of operating time.				
	GENERAL				
	1. Review helicopter log book and make sure that all recorded discrepancies have been corrected.				
	2. Do all necessary airworthiness directives.				
429-A-04-00-00-00A-009A-A / 00007	3. Make sure that life limited parts do not exceed service life.				
429-MM, Chapter 12	4. Do all necessary lubrication tasks.				
429-A-05-40-00-22A-281A-A / 00043	5. Do all miscellaneous inspections, as necessary.				
429-MM, Chapter 99	6. Do all inspection tasks for installed BHT kits not included in this inspection, as necessary.				
	7. Record accomplishment of this inspection in the helicopter log book.				
	PREPARATION TASKS				
429-MM, Chapter 06	1. Remove panels 500A, 500G, 600ER, 600EL, 600FL, 600FR, 700EL, 700ER, 700GL, and 700GR.				
	TAIL ROTOR DRIVE SYSTEM				
429-MM, Chapter 12 651006	1. Lubricate the fan shaft assembly hanger bearings.	700EL, 700ER, 700GL, 700GR	711		
429-MM, Chapter 12 651009	2. Lubricate the hanger assembly duplex bearing.	500A	510		
429-MM, Chapter 12 429-MM, Chapter 12 652001	3. Replace lubricating oil in the tail rotor gearbox.	500G	510		
	POWER PLANT				
BHT-429-CMM-V, Chapter 71 716101	1. Lubricate the inlet barrier filters.	N/A	710		
	GENERATOR POWER SYSTEM				

POST OFFICE BOX 482 • FORT WORTH, TEXAS 76101

Table 1. Scheduled Inspections — 400-Hour Inspection (continued)

DATA REFERENCE/IMRR TASK NUMBER	TASK DESCRIPTION	ACCESS	ZONES	INITIAL	
				MECH	OTHER
429-MM, Chapter 96 801001	1. Do a functional check of the No.1 and No.2 starter generator brushes.	600ER, 600EL, 600FR, 600FL	710		
429-MM, Chapter 67 643010	**FLIGHT CONTROLS** **NOTE** *For pitch link assemblies (429-012-212-105 and 429-012-212-107), the first inspection occurs at 400 flight hours, and subsequent inspection occurs every 200 hours.* *1. Do a detailed inspection of the tail rotor pitch link assemblies (429-012-212-105 and 429-012-212-107).*	N/A	510		
429-MM, Chapter 06	**COMPLETION TASKS** 1. Install panels 500A, 500G, 600ER, 600EL, 600FL, 600FR, 700EL, 700ER, 700GL, and 700GR.				

POST OFFICE BOX 482 • FORT WORTH, TEXAS 76101

Scheduled Inspections - 600-Hour or 12-Month Inspection

Table 1. Scheduled Inspections — 600-Hour or 12-Month Inspection

DATA REFERENCE/IMRR TASK NUMBER	TASK DESCRIPTION	ACCESS	ZONES	INITIAL MECH	INITIAL OTHER
	DATE: _____W.O.				
	FACILITY:				
	HELICOPTER S/N:				
	REGISTRY NO.:				
	TOTAL TIME:				
	SIGNATURE:				
	NOTE To be performed every 600 hours of operating time or 12 months, whichever occurs first.				
	GENERAL				
	1. Deleted.				
DELETED	*2. Deleted.*				
	3. Review helicopter log book and make sure that all recorded discrepancies have been corrected.				
	4. Make sure that compliance with all necessary airworthiness directives.				
429-A-04-00-00-00A-009A-A / 00007	5. Make sure that life limited parts do not exceed service life.				
429-MM, Chapter 12	6. Make sure that all necessary lubrication tasks have been performed.				
429-A-05-40-00-22A-281A-A / 00043	7. Make sure that all necessary miscellaneous inspections have been performed, as necessary.				
429-MM, Chapter 99	8. Make sure that all necessary inspections of installed BHT kits not covered in this inspection have been performed, as necessary.				
	9. Record accomplishment of this inspection in the helicopter log book.				
	PREPARATION TASKS				
429-MM, Chapter 06	1. Remove panels 100A, 100B, 500G, 600FL, 600FR, 700EL, and 700ER.				
	TAIL ROTOR DRIVE SYSTEM				
429-MM, Chapter 12 651004	1. Lubricate the driveshaft couplings.	600FL, 600FR, 700EL, 700ER	710		
	TAIL ROTOR				
429-MM, Chapter 12 643004	1. Lubricate the pitch change trunnion bearing.	500G	510		
	MAIN ROTOR				
429-MM, Chapter 62 623002	1. Do a functional check of the swashplate tilt friction.	N/A	611		
	BATTERY POWER SYSTEM				

POST OFFICE BOX 482 • FORT WORTH, TEXAS 76101

Table 1. Scheduled Inspections — 600-Hour or 12-Month Inspection (continued)

DATA REFERENCE/IMRR TASK NUMBER	TASK DESCRIPTION	ACCESS	ZONES	INITIAL	
				MECH	OTHER
429-MM, Chapter 96 243002	1. Do a functional check of the battery.	100A, 100B	100		
	WARNING/CAUTION/ADVISORY SYSTEM				
429-MM, Chapter 96 636001	1. Do a functional check of the rotor brake caliper switch assemblies.	600FL, 600FR	611		
	GENERATOR POWER SYSTEM				
	1. Deleted				
	2. Deleted				
	AIRCRAFT LIGHTING				
SX-5 Starburst Maintenance Manual 334301	1. Do a restoration (cleaning) of the spectrolab SX-5 searchlight air filler (if installed).	N/A			
SX-5 Starburst Maintenance Manual 334302	2. Do a functional check (breakaway torque check) of the spectrolab SX-5 gimbal clutches (if installed).	N/A			
	COMPLETION TASKS				
429-MM, Chapter 06	1. Install panels 100A, 100B, 500G, 600FL, 600FR, 700EL, and 700ER.				

POST OFFICE BOX 482 • FORT WORTH, TEXAS 76101

Scheduled Inspections - 800-Hour Inspection

Procedure

Table 1. Scheduled Inspections - 800-Hour Inspection

DATA REFERENCE/IMRR TASK NUMBER	TASK DESCRIPTION	ACCESS	ZONES	INITIAL	
				MECH	OTH-ER
	DATE: _____W.O.				
	FACILITY:				
	HELICOPTER S/N:				
	REGISTRY NO.:				
	TOTAL TIME:				
	SIGNATURE:				
	NOTE To be done every 800 hours of operating time.				
	GENERAL				
429-A-04-00-00-00A-009A-A / 00007	1. Make sure the life limited parts do not go over the service life.				
429-MM, Chapter 12	2. Do all lubrication tasks, as necessary.				
429-A-05-40-00-22A-281A-A / 00043	3. Do all miscellaneous inspections, as necessary.				
429-MM, Chapter 99	4. Do all the inspection tasks for the installed Bell Textron kits not included in this inspection, as necessary.				
	5. Record these inspections as done in the helicopter log book.				
	PREPARATION TASKS				
429-MM, Chapter 06	1. Remove the panels 100EL, 100ER, 200AL, 200AR, 200DL, 200DR, 500A, 500B, 500F, 500G, 600EL, 600ER, 600FL, 600FR, 700BL, 700BR, 700CL, 700CR, 700DL, 700DR, 700EL, 700ER, 700GL, 700GR, and 700H.				
	DOORS AND WINDOWS				
429-MM, Chapter 52 253001	1. Do a detailed inspection of the chin bubbles (applicable only if the Ditching Kit (429-706-048) is installed).	100EL, 100ER	110		
	MAIN ROTOR				
429-MM, Chapter 62 621001	1. Do a detailed inspection of the main rotor blade assemblies.	N/A	611		
429-MM, Chapter 62 622001	2. Do a detailed inspection of the mast nut locks.	N/A	611		
429-MM, Chapter 62 622007	3. Do a detailed inspection of the lower mount assembly to include the main rotor down stop assemblies.	N/A	611		
429-MM, Chapter 62 622009	4. Do a detailed inspection of the plate assembly.	N/A	611		

POST OFFICE BOX 482 • FORT WORTH, TEXAS 76101

Table 1. Scheduled Inspections - 800-Hour Inspection (continued)

DATA REFERENCE/IMRR TASK NUMBER	TASK DESCRIPTION	ACCESS	ZONES	INITIAL	
				MECH	OTH-ER
429-MM, Chapter 62 622010	5. Do a detailed inspection of the upper mount assembly.	N/A	611		
	6. Deleted				
429-MM, Chapter 62 622013	7. Do a detailed inspection of the grip assembly (grip horn).	N/A	611		
429-MM, Chapter 62 622014	8. Do a detailed inspection of the upper and lower yokes.	N/A	611		
429-MM, Chapter 62 622015	9. Do a detailed inspection of the lead-lag dampers.	N/A	611		
429-MM, Chapter 62 622016	10. Do a general visual inspection of the upper stops.	N/A	611		
429-MM, Chapter 62 622017	11. Do a detailed inspection of the Centrifugal Force (CF) bearing (pivot/feathering).	N/A	611		
429-MM, Chapter 62 622018	12. Do a detailed inspection of the shear bearing.	N/A	611		
429-MM, Chapter 62 623004	13. Do a detailed inspection of the pitch link assemblies.	N/A	611		
429-MM, Chapter 62 623005	14. Do a detailed inspection of the collective lever assembly.	N/A	611		
429-MM, Chapter 62 623007	15. Do a detailed inspection of the drive link assemblies.	N/A	611		
429-MM, Chapter 62 623009	16. Do a detailed inspection of the sleeve assembly.	N/A	611		
429-MM, Chapter 62 623013	17. Do a detailed inspection of the collective link assembly.	N/A	611		
429-MM, Chapter 62 623017	18. Do a detailed inspection of the swashplate and support assembly.	N/A	611		
429-MM, Chapter 62 623018	19. Do a detailed inspection of the swashplate assembly duplex bearing.	N/A	611		
	MAIN ROTOR DRIVE SYSTEM				
429-MM, Chapter 12 631001	1. Replace lubricating oil in the transmission assembly.	600EL	611		
429-MM, Chapter 63 631004	2. Do a general visual inspection of the transmission assembly.	600EL, 600ER, 600FL, 600FR	611		

Table 1. Scheduled Inspections - 800-Hour Inspection (continued)

DATA REFERENCE/IMRR TASK NUMBER	TASK DESCRIPTION	ACCESS	ZONES	INITIAL	
				MECH	OTH-ER
429-MM, Chapter 63 632001	3. Do a detailed inspection of the engine-to-transmission driveshafts.	600FL, 600FR	710		
429-MM, Chapter 63 633002	4. Do a detailed inspection of the mast assembly.	600EL, 600ER	611		
429-MM, Chapter 65 634001	5. Do a detailed inspection of the transmission oil cooler blower assemblies.	700GL, 700GR	711		
429-MM, Chapter 63 634003	6. Replace the oil filter element.	600EL, 600FL	611		
429-MM, Chapter 79 634006	7. Do a general visual inspection of the oil cooler assembly and oil cooler plenum assembly.	700GL, 700GR	711		
429-MM, Chapter 63 635001	8. Do a detailed inspection of the pylon beam assemblies.	600FL, 600FR	611		
	9. Deleted				
	TAIL ROTOR				
429-MM, Chapter 64 641001	1. Do a detailed inspection of the tail rotor blade assemblies.	N/A	510		
429-MM, Chapter 64 642001	2. Do a detailed inspection of the tail rotor mast nut.	N/A	510		
429-MM, Chapter 64 642003	3. Do a detailed inspection of the blade bolts.	N/A	510		
429-MM, Chapter 64 642004	4. Do a detailed inspection of the yoke assemblies.	N/A	510		
429-MM, Chapter 64 642006	5. Do a detailed inspection of the pitch change (feathering) bearings.	N/A	510		
429-MM, Chapter 64 642009	6. Do a detailed inspection of the flapping bearings.	N/A	510		
429-MM, Chapter 64 643008	7. Do a detailed inspection of the pitch horn assemblies.	N/A	510		
	TAIL ROTOR DRIVE SYSTEM				
429-MM, Chapter 65 651001	1. Do a detailed inspection of the segmented shaft assemblies.	500A, 500B, 700GL, 700GR, 700H	510, 711		
429-MM, Chapter 65 651002	2. Do a detailed inspection of the fan shaft assembly support bracket.	700EL, 700ER	711		

POST OFFICE BOX 482 • FORT WORTH, TEXAS 76101

Table 1. Scheduled Inspections - 800-Hour Inspection (continued)

DATA REFERENCE/IMRR TASK NUMBER	TASK DESCRIPTION	ACCESS	ZONES	INITIAL	
				MECH	OTH-ER
429-MM, Chapter 65 651003	3. Do a detailed inspection of the coupling disc packs.	500A, 500B, 500G, 700GL, 700GR	510, 711		
429-MM, Chapter 65 651007	4. Do a detailed inspection of the fan shaft assembly.	700EL, 700ER, 700GL, 700GR	510, 711		
429-MM, Chapter 65 651008	5. Do a detailed inspection of the snubbers.	500B, 700H	510		
429-MM, Chapter 65 651010	6. Do a detailed inspection of the hanger assembly.	500A	510		
429-MM, Chapter 65 651011	7. Do a detailed inspection of the fan shaft hanger bearing assemblies.	700EL, 700ER, 700GL, 700GR	711		
429-MM, Chapter 65 652002	8. Do a general visual inspection of the tail rotor gearbox.	500F, 500G	510		
	DIRECTIONAL CONTROL SYSTEM				
429-MM, Chapter 67 643001	1. Do a detailed inspection of the pitch change control tube.	N/A	510		
429-MM, Chapter 67 643002	2. Do a detailed inspection of the input lever assembly.	500G	510		
429-MM, Chapter 67 643003	3. Do a detailed inspection of the crosshead assembly.	N/A	510		
429-MM, Chapter 67 643005	4. Do a detailed inspection of the trunnion assembly.	500G	510		
429-MM, Chapter 67 643006	5. Do a detailed inspection of the idler link assembly.	500G	510		
429-MM, Chapter 67 643009	6. Do a detailed inspection of the input rod assembly.	N/A	510		
	FIREWALLS				
429-MM, Chapter 71 713001	1. Do a detailed inspection of the forward firewall.	600EL, 600ER, 600FL, 600FR	710		

Table 1. Scheduled Inspections - 800-Hour Inspection (continued)

DATA REFERENCE/IMRR TASK NUMBER	TASK DESCRIPTION	ACCESS	ZONES	INITIAL	
				MECH	OTH-ER
429-MM, Chapter 71 713002	2. Do a detailed inspection of the inlet tee assemblies and inlet firewalls.	600EL, 600ER, 600FL, 600FR, 700BL, 700BR, 700CL, 700CR, 700DL, 700DR	710		
429-MM, Chapter 71 713003	3. Do a detailed inspection of the aft firewall.	700CL, 700CR, 700DL, 700DR, 700GL, 700GR	710		
429-MM, Chapter 71 713004	4. Do a detailed inspection of the firewall tunnel and the forward, mid, and aft center firewalls.	600EL, 600ER, 600FL, 600FR, 700BL, 700BR, 700CL, 700CR, 700DL, 700DR	710		
	DRAINS				
429-MM, Chapter 71 717001	1. Do an operational check of the roof drains.	600FL, 600FR, 700BL, 700BR, 700DL, 700DR	710		
	ENGINE OIL SYSTEM				
429-MM, Chapter 79 792002	1. Do a detailed inspection of the engine oil cooler blower assemblies.	700GL, 700GR	710, 711		
	DC POWER SYSTEM				
429-MM, Chapter 96 263001A	1. Do a functional check of the fire extinguisher electrical system.	N/A			
429-MM, Chapter 96 246001	2. Do an operational check of the emergency bus diode (2430CR1).	200AL, 200AR	111		
429-MM, Chapter 96 246004	3. Do an operational check of the emergency bus isolation contactors (2430K5 and 2430K6).	200AL, 200AR	111		
	ENGINE (ELECTRICAL) SYSTEM				
429-MM, Chapter 96 716103	1. Do an operational check of the inlet barrier filter bypass doors.	N/A	710		

POST OFFICE BOX 482 • FORT WORTH, TEXAS 76101

Table 1. Scheduled Inspections - 800-Hour Inspection (continued)

DATA REFERENCE/IMRR TASK NUMBER	TASK DESCRIPTION	ACCESS	ZONES	INITIAL	
				MECH	OTH-ER
429-MM, Chapter 06	**COMPLETION TASKS** 1. Install the panels 100EL, 100ER, 200AL, 200AR, 200DL, 200DR, 500A, 500B, 500F, 500G, 600EL, 600ER, 600FL, 600FR, 700BL, 700BR, 700CL, 700CR, 700DL, 700DR, 700EL, 700ER, 700GL, 700GR, and 700H.				

POST OFFICE BOX 482 • FORT WORTH, TEXAS 76101

Scheduled Inspections - 800-Hour or 12-Month Inspection

Table 1. Scheduled Inspections — 800-Hour or 12-Month Inspection

DATA REFERENCE/IMRR TASK NUMBER	TASK DESCRIPTION	ACCESS	ZONES	INITIAL MECH	INITIAL OTHER
	DATE: _____W.O.				
	FACILITY:				
	HELICOPTER S/N:				
	REGISTRY NO.:				
	TOTAL TIME:				
	SIGNATURE:				
	NOTE To be performed every 800 hours of operating time or 12 months, whichever occurs first.				
	GENERAL				
	1. Deleted.				
DELETED	*2. Deleted.*				
	3. Deleted.				
	4. Review helicopter log book and make sure that all recorded discrepancies have been corrected.				
	5. Make sure that compliance with all necessary airworthiness directives.				
429-A-04-00-00-00A-009A-A / 00007	6. Make sure that life limited parts do not exceed service life.				
429-MM, Chapter 12	7. Make sure that all necessary lubrication tasks have been performed.				
429-A-05-40-00-22A-281A-A / 00043	8. Make sure that all necessary miscellaneous inspections have been performed, as necessary.				
429-MM, Chapter 99	9. Make sure that all necessary inspections of installed BHT kits not covered in this inspection have been performed, as necessary.				
	10. Record accomplishment of this inspection in the helicopter log book.				
	PREPARATION TASKS				
429-MM, Chapter 06	1. Remove panels 200DL and 200DR.				
	LANDING GEAR				
	1. through 7. Deleted				
	DOORS AND WINDOWS				
	1.Deleted.				
	FUSELAGE				
429-MM, Chapter 53 533004-1A	1. Do a special detailed inspection of the forward lift frame.	200DL, 200DR	213, 214		
	MAIN ROTOR				
	1. through 19. Deleted				
	MAIN ROTOR DRIVE SYSTEM				
	1. through 9. Deleted				
	TAIL ROTOR				

POST OFFICE BOX 482 • FORT WORTH, TEXAS 76101

Table 1. Scheduled Inspections — 800-Hour or 12-Month Inspection (continued)

DATA REFERENCE/IMRR TASK NUMBER	TASK DESCRIPTION	ACCESS	ZONES	INITIAL	
				MECH	OTHER
	1. through 7. Deleted				
	TAIL ROTOR DRIVE SYSTEM				
	1. through 8. Deleted				
	DIRECTIONAL CONTROL SYSTEM				
	1. through 5. Deleted				
	FIREWALLS				
	1. through 4. Deleted				
	DRAINS				
	1. Deleted				
	DC POWER SYSTEM				
	1. through 3. Deleted				
	ENGINE (ELECTRICAL) SYSTEM				
	1. Deleted	N/A	710		
	COMPLETION TASKS				
429-MM, Chapter 06	1. Install panels 200DL and 200DR.				

POST OFFICE BOX 482 • FORT WORTH, TEXAS 76101

Scheduled Inspections - 800-Hour or 24-Month Inspection

Table 1. Scheduled Inspections - 800-Hour or 24-Month Inspection

DATA REFERENCE/IMRR TASK NUMBER	TASK DESCRIPTION	ACCESS	ZONES	INITIAL MECH	INITIAL OTHER
	DATE: _____W.O.				
	FACILITY:				
	HELICOPTER S/N:				
	REGISTRY NO.:				
	TOTAL TIME:				
	SIGNATURE:				
	NOTE To be performed every 800 hours of operating time or 24 months, whichever occurs first.				
	GENERAL				
	1. Review helicopter log book and ensure all recorded discrepancies have been corrected.				
	2. Ensure compliance with all applicable airworthiness directives.				
429-A-04-00-00-00A-009A-A / 00007	3. Ensure life limited parts do not exceed service life.				
429-MM, Chapter 12	4. Ensure all required lubrication tasks have been performed.				
429-A-05-40-00-22A-281A-A / 00043	5. Ensure all required miscellaneous inspections have been performed, as applicable.				
429-MM, Chapter 99	6. Ensure all required inspections of installed BHT kits not covered in this inspection have been performed, as applicable.				
	7. Record accomplishment of this inspection in the helicopter log book.				
	PREPARATION TASKS				
	None				
	MAIN ROTOR				
429-MM, Chapter 62 622012	1. Do a detailed inspection of the blade bolts.	N/A	611		
	COMPLETION TASKS				
	None				

POST OFFICE BOX 482 • FORT WORTH, TEXAS 76101

Intentionally blank page

POST OFFICE BOX 482 • FORT WORTH, TEXAS 76101

Scheduled Inspections - 1200-Hour Inspection

Procedure

Table 1. Scheduled Inspections - 1200-Hour Inspection

DATA REFERENCE/IMRR TASK NUMBER	TASK DESCRIPTION	ACCESS	ZONES	INITIAL MECH	INITIAL OTHER
	DATE: _____W.O.				
	FACILITY:				
	HELICOPTER S/N:				
	REGISTRY NO.:				
	TOTAL TIME:				
	SIGNATURE:				
429-A-04-00-00-00A-009A-A / 00007 Trakkabeam A800 Searchlight Maintenance Manual 334401	**NOTE** To be performed every 1200 hours of operating time. **GENERAL** 1. Review helicopter log book and ensure all recorded discrepancies have been corrected. 2. Ensure compliance with all applicable airworthiness directives. 3. Ensure life limited parts do not exceed service life. 4. Do a functional check of the trakka corp. A800 spotlight (if installed).	N/A			

POST OFFICE BOX 482 • FORT WORTH, TEXAS 76101

Intentionally blank page

POST OFFICE BOX 482 • FORT WORTH, TEXAS 76101

Scheduled Inspections - 1600-Hour or 2-Year Inspection

Table 1. Scheduled Inspections — 1600-Hour or 2-Year Inspection

DATA REFERENCE/IMRR TASK NUMBER	TASK DESCRIPTION	ACCESS	ZONES	INITIAL MECH	INITIAL OTHER
	DATE: _____W.O.				
	FACILITY:				
	HELICOPTER S/N:				
	REGISTRY NO.:				
	TOTAL TIME:				
	SIGNATURE:				
	NOTE To be performed every 1600 hours of operating time or 2 years, whichever occurs first.				
	GENERAL				
	1. Review helicopter log book and make sure that all recorded discrepancies have been corrected.				
	2. Make sure that compliance with all necessary airworthiness directives.				
429-A-04-00-00-00A-009A-A / 00007	3. Make sure that life limited parts do not exceed service life.				
429-MM, Chapter 12	4. Make sure that all necessary lubrication tasks have been performed.				
429-A-05-40-00-22A-281A-A / 00043	5. Make sure that all necessary miscellaneous inspections have been performed, as necessary.				
429-MM, Chapter 99	6. Make sure that all necessary inspections of installed BHT kits not covered in this inspection have been performed, as necessary.				
	7. Record accomplishment of this inspection in the helicopter log book.				
	PREPARATION TASKS				
	None				
	WHEELED LANDING GEAR SYSTEM				
429-MM, Chapter 32 323001	1. Do a functional check of the wheeled landing gear system (emergency release function) (429-MM, Chapter 96).				
	COMPLETION TASKS				
	None				

POST OFFICE BOX 482 • FORT WORTH, TEXAS 76101

Intentionally blank page

POST OFFICE BOX 482 • FORT WORTH, TEXAS 76101

Scheduled Inspections - 3000-Hour Inspection

Procedure

Table 1. Scheduled Inspections - 3000-Hour Inspection

DATA REFERENCE/ IMRR TASK NUMBER	TASK DESCRIPTION	ACCESS	ZONES	INITIAL MECH	INITIAL OTHER
	DATE: _____W.O. FACILITY: HELICOPTER S/N: REGISTRY NO.: TOTAL TIME: SIGNATURE:				
	NOTE To be done every 3000 hours of operating time.				
	GENERAL				
429-A-04-00-00-00A-009A-A / 00007	1. Make sure the life limited parts do not go over the service life.				
429-MM, Chapter 12	2. Do all the necessary lubrication tasks.				
429-A-05-40-00-22A-281A-A / 00043	3. Do all the miscellaneous inspections, as necessary.				
429-MM, Chapter 99	4. Do all the inspection tasks for the installed Bell Textron kits not included in this inspection, as necessary.				
	5. Record these inspections as done in the helicopter log book.				
	PREPARATION TASKS				
	1. Remove the transmission cowl door assemblies 600FL, and 600FR.				
	MAIN ROTOR DRIVE SYSTEM				
BHT-429-CMM-V, Chapter 63 636004	1. Do a restoration (overhaul) of the rotor brake calipers.	600FL, 600FR	710		
	COMPLETION TASKS				
	1. Install the transmission cowl door assemblies 600FL, and 600FR.				

POST OFFICE BOX 482 • FORT WORTH, TEXAS 76101

Intentionally blank page

POST OFFICE BOX 482 • FORT WORTH, TEXAS 76101

Scheduled Inspections - 12-Month Inspection

Table 1. Scheduled Inspections — 12-Month Inspection

DATA REFERENCE/IMRR TASK NUMBER	TASK DESCRIPTION	ACCESS	ZONES	INITIAL MECH	INITIAL OTHER
	DATE: _____W.O.				
	FACILITY:				
	HELICOPTER S/N:				
	REGISTRY NO.:				
	TOTAL TIME:				
	SIGNATURE:				
	NOTE To be performed every 12 months.				
	GENERAL				
	1. Review helicopter log book and ensure all recorded discrepancies have been corrected.				
	2. Make sure compliance with all necessary airworthiness directives.				
429-A-04-00-00-00A-009A-A / 00007	3. Make sure that life limited parts do not exceed service life.				
429-MM, Chapter 12	4. Make sure that all necessary lubrication tasks have been performed.				
429-A-05-40-00-22A-281A-A / 00043	5. Make sure that all necessary miscellaneous inspections have been performed, as necessary.				
429-MM, Chapter 99	6. Make sure that all necessary inspections of installed BHT kits not covered in this inspection have been performed, as necessary.				
	7. Record accomplishment of this inspection in the helicopter log book.				
	PREPARATION TASKS				
429-MM, Chapter 06	1. Remove panels 100EL, 100ER, 100F, 100G, 200AL, 200AR, 400B, 600CL, 600CR, 600EL, 600ER, 600FL, 600FR, 700AL, 700AR, 700BL, 700BR, 700CL, 700CR, 700DL, 700DR, 700EL, 700ER, 700GL, 700GR, and 700H.				
	AVIONICS SYSTEM				
429-MM, Chapter 97 256001	1. Do an operational check of the Emergency Locator Transmitter (ELT) system.	200AL, 200AR	211		
BHT-429-CMM-V, Chapter 97 256324	2. Do an operational check of the ELT (if installed).	N/A			
	FIRE PROTECTION				
429-MM, Chapter 26 262003	1. Do detailed inspection of the fire extinguisher discharge lines.	600FL, 600FR, 700DL, 700DR	710		
429-MM, Chapter 26 *262201*	*2. Do a functional check (re-weigh) of the portable fire extinguisher to check for proper charge (if installed). Applicable to RT Protection RT-A1200 and Ansul 429107.*	N/A			

POST OFFICE BOX 482 • FORT WORTH, TEXAS 76101

Table 1. Scheduled Inspections — 12-Month Inspection (continued)

DATA REFERENCE/IMRR TASK NUMBER	TASK DESCRIPTION	ACCESS	ZONES	INITIAL MECH	INITIAL OTHER
429-MM, Chapter 26 *262203*	*3. Do a detailed inspection of the fire extinguisher bottle and bracket (if installed). Applicable to RT Protection RT-A1200 and Ansul 429107.*	N/A	200		
	INSTRUMENT SYSTEM				
429-MM, Chapter 95 312002	1. Do a general visual inspection of the standby compass.	200AL, 200AR	212		
	FUSELAGE				
	NOTE The following step is only for helicopters S/N 57002 through 57038, 57046, and 57051.				
429-MM, Chapter 53 534002-5	1. Do a detailed inspection of the sealant around the roof beam doublers between STA 168.285 and STA 213.568.	600CL, 600CR, 600FL, 600FR	610, 611		
429-MM, Chapter 32 535007-2	2. Do a general visual inspection of the tail skid assembly.	N/A	513		
	DRAINS				
	Deleted.				
	COWLINGS AND FAIRINGS				
429-MM, Chapter 53 711001	1. Do a general visual inspection of the following cowlings and fairings: - Transmission cowl assemblies (600EL and 600ER) - Transmission cowl door assemblies (600FL and 600FR) - Engine air intake basic inlets (700BL and 700BR) - Aft engine cowl assemblies (700CL and 700CR) - Aft engine cowl door assemblies (700DL and 700DR) - Forward exhaust fairings (700GL and 700GR) - Aft exhaust fairing (700H)	600EL, 600ER, 600FL, 600FR, 700BL, 700BR, 700CL, 700CR, 700DL, 700DR, 700GL, 700GR, 700H	611, 710, 711		
	ZONAL INSPECTIONS				
100-01E-01	1. Clean the LH lower nose compartment wiring and harness assemblies to remove contaminants and dust and lint build-up.	100EL, 100F, 100G	110		
100-01E-02	2. Clean the RH lower nose compartment wiring and harness assemblies to remove contaminants and dust and lint build-up.	100ER, 100F, 100G	110		
400-02E-01	3. Do a restoration (cleaning of hydraulic fluid).	N/A	400		
700-01	4. Do a general visual inspection of zone 710.	700AL, 700AR, 700DL, 700DR, 700EL, 700ER	710		

POST OFFICE BOX 482 • FORT WORTH, TEXAS 76101

Table 1. Scheduled Inspections — 12-Month Inspection (continued)

DATA REFERENCE/IMRR TASK NUMBER	TASK DESCRIPTION	ACCESS	ZONES	INITIAL	
				MECH	OTHER
700-01E-05	5. Do a general visual inspection of all electrical harnesses in the No. 1 engine compartment.	600EL, 600FL, 700BL, 700CL, 700DL	710		
700-01E-06	6. Do a general visual inspection of all electrical harnesses in the No. 2 engine compartment.	600ER, 600FR, 700BR, 700CR, 700DR	710		
	COMPLETION TASKS				
429-MM, Chapter 06	1. Install panels 100EL, 100ER, 100F, 100G, 200AL, 200AR, 400B, 600CL, 600CR, 600EL, 600ER, 600FL, 600FR, 700AL, 700AR, 700BL, 700BR, 700CL, 700CR, 700DL, 700DR, 700EL, 700ER, 700GL, 700GR, and 700H.				

POST OFFICE BOX 482 • FORT WORTH, TEXAS 76101

Intentionally blank page

POST OFFICE BOX 482 • FORT WORTH, TEXAS 76101

Scheduled Inspections - 2-Year Inspection

Table 1. Scheduled Inspections — 2-Year Inspection

DATA REFERENCE/IMRR TASK NUMBER	TASK DESCRIPTION	ACCESS	ZONES	INITIAL MECH	INITIAL OTHER
	DATE: _____W.O.				
	FACILITY:				
	HELICOPTER S/N:				
	REGISTRY NO.:				
	TOTAL TIME:				
	SIGNATURE:				
	NOTE *Refer to the requirements from your government regulatory authority for the applicable interval(s).*				
	NOTE To be done every 2 years.				
	GENERAL				
	1. Examine the helicopter log book and make sure all the recorded discrepancies have been corrected.				
	2. Make sure of the compliance with all applicable airworthiness directives.				
429-A-04-00-00-00A-009A-A / 00007	3. Make sure that the life limited parts do not go over the service life.				
429-MM, Chapter 12	4. Make sure that all the necessary lubrication tasks have been done.				
429-A-05-40-00-22A-281A-A / 00043	5. Make sure that all the necessary miscellaneous inspections have been done, as necessary.				
429-MM, Chapter 99	6. Make sure that all the necessary inspections of the installed Bell Textron kits not covered in this inspection have been done, as necessary.				
	7. Record accomplishment of this inspection in the helicopter log book.				
	PREPARATION TASKS				
429-MM, Chapter 06	1. Remove panels 100G, 200AL, 200AR, 200BL, 200BR, 200CL, 200DL, 200DR, 200CC, 200CR, 400B, 400C, 500C, 500D, 500F, 600B, 600CL, 600CR, 600D, 600EL, 600ER, 600FL, 600FR, 700BL, 700BR, 700CL, 700CR, 700DL, 700DR, 700GL, and 700GR.				
	PITOT STATIC SYSTEM				
429-MM, Chapter 95 341001	1. Do a functional check of the Air Data Computer (ADC) .	N/A			
429-MM, Chapter 95 341002	2. Do a general visual inspection of the four static ports.	N/A	200		
429-MM, Chapter 95 341003	3. Do a functional check of the standby altimeter.	N/A			

POST OFFICE BOX 482 • FORT WORTH, TEXAS 76101

Table 1. Scheduled Inspections — 2-Year Inspection (continued)

DATA REFERENCE/IMRR TASK NUMBER	TASK DESCRIPTION	ACCESS	ZONES	INITIAL MECH	INITIAL OTHER
429-MM, Chapter 95 341004	4. Do a general visual inspection of the pilot and copilot pitot tubes.	N/A	100		
	EXTERIOR LIGHTING SYSTEM				
429-MM, Chapter 96 334004	1. Do a detailed inspection of the vertical fin and horizontal stabilizer position lights.	N/A	511, 512, 513		
429-MM, Chapter 96 334101	2. Do a detailed inspection of the position/strobe light for condition, safety, and each failed Light Emitting Diode (LED) , if installed.	N/A			
	INTERIOR LIGHTING SYSTEM				
429-MM, Chapter 96 335001	1. Do an operational check of the emergency instrument lighting system.	200AL, 200AR	212		
	DOORS AND WINDOWS				
429-MM, Chapter 52 521001	1. Do a detailed inspection of the crew door and passenger door hinge assemblies.	200AL, 200AR, 200DL, 200DR	210, 211, 213, 214		
429-MM, Chapter 52 521002	2. Do a detailed inspection of the crew door and passenger door latch mechanism.	200AL, 200AR, 200DL, 200DR	210, 211, 213, 214		
429-MM, Chapter 52 528001	3. Do a detailed inspection of the rear loading door hinges, if installed.	N/A			
429-MM, Chapter 52 528002	4. Do a detailed inspection of the rear loading door latches, if installed.	N/A			
	FUSELAGE				
429-MM, Chapter 53 534002-4	1. Do a detailed inspection of the engine deck assembly.	600FL, 600FR, 700BL, 700BR, 700CL, 700CR, 700DL, 700DR,	710		
	MAIN ROTOR DRIVE SYSTEM				
	1. Deleted				
429-MM, Chapter 63 633001-1	2. Do a detailed inspection of the mast nut threads, mid cone seat, and hub drive spline of the mast assembly.	600EL, 600ER	611		
429-MM, Chapter 63 633002-1	3. Do a general visual inspection of the inner diameter of the mast assembly for corrosion and deterioration of the primer.	600EL, 600ER	611		
429-MM, Chapter 63 635002	4. Do a general visual inspection of the vertical Liquid Inertia Vibration Eliminator (LIVE) mounts.	600FL, 600FR	611		
429-MM, Chapter 63 635003	5. Do a general visual inspection of the pitch restraint spring assemblies.	600FL, 600FR	611		

Table 1. Scheduled Inspections — 2-Year Inspection (continued)

DATA REFERENCE/IMRR TASK NUMBER	TASK DESCRIPTION	ACCESS	ZONES	INITIAL MECH	INITIAL OTHER
	FLIGHT CONTROLS				
429-MM, Chapter 67 671002	1. Do a detailed inspection of the cyclic longitudinal control tube assemblies.	200AR, 200CR	211, 314		
429-MM, Chapter 67 671003	2. Do a detailed inspection of the cyclic longitudinal control bellcrank assemblies.	200AR, 200CR	211, 314		
429-MM, Chapter 67 671004	3. Do a detailed inspection of the cyclic lateral control tube assemblies.	200AR, 200CR	211, 314		
429-MM, Chapter 67 671005	4. Do a detailed inspection of the cyclic lateral control bellcrank assemblies.	200AR, 200CR	211, 314		
429-MM, Chapter 67 671007	5. Do a detailed inspection of the collective control tube assemblies.	200AR, 200CL, 200CC, 200CR, 600CL, 600CR	211, 314, 610		
429-MM, Chapter 67 671008	6. Do a detailed inspection of the collective control bellcrank assemblies.	200AL, 200AR, 200CL	211, 314		
429-MM, Chapter 67 671009	7. Do a detailed inspection of the mixer assembly.	200BR, 200CR	315		
429-MM, Chapter 67 671010	8. Do a detailed inspection of the collective link assembly.	200AL, 200CL	314		
429-MM, Chapter 67 671011	9. Do a detailed inspection of the collective jackshaft assembly.	200AL, 200AR, 200BL, 200CL, 200CC, 200CR	313, 314		
429-MM, Chapter 67 671012	10. Do a detailed inspection of the longitudinal link assemblies.	200AR, 200BR, 200CR	315, 314		
429-MM, Chapter 67 671013	11. Do a detailed inspection of the lateral link assembly.	200AR, 200CR	314		
429-MM, Chapter 67 671014	12. Do a detailed inspection of the transmission mounted bellcrank support assembly.	600EL, 600ER, 600FL, 600FR	611		
429-MM, Chapter 67 672002	13. Do a detailed inspection of the directional control tube assembly.	400C, 500C, 500D, 500F	411, 510		
429-MM, Chapter 67 672003	14. Do a detailed inspection of the directional control bellcrank assembly.	500C, 500D, 500F	510		
429-MM, Chapter 67 672004	15. Do a detailed inspection of the directional control torque tube assembly.	100G, 200AL, 200AR	110		

POST OFFICE BOX 482 • FORT WORTH, TEXAS 76101

Table 1. Scheduled Inspections — 2-Year Inspection (continued)

DATA REFERENCE/IMRR TASK NUMBER	TASK DESCRIPTION	ACCESS	ZONES	INITIAL	
				MECH	OTHER
429-MM, Chapter 67 672005	16. Do a detailed inspection of the pedal link assemblies.	200AL, 200AR	110		
429-MM, Chapter 67 672006	17. Do a detailed inspection of the directional trim actuator link assembly.	200AL	110		
429-MM, Chapter 67 672007	18. Do a detailed inspection of the directional idler assembly, attached to the forward end of the Automatic Flight Control System (AFCS) actuator.	400B	410		
429-MM, Chapter 67 672008	19. Do a detailed inspection of the directional idler assembly, attached between the AFCS actuator and the dual hydraulic actuator.	400C	410		
429-MM, Chapter 67 672009	20. Do a detailed inspection of the directional idler assembly, attached to the aft end of the dual hydraulic actuator.	400C	411		
429-MM, Chapter 29 673001	21. Do a functional check of the collective, lateral, longitudinal, and directional servo actuators.	400C, 600CL, 600CR	411, 610		
	ELECTRICAL SYSTEM				
429-MM, Chapter 96 2810LA-02	1. Do a detailed inspection of the connector 4296J4 to include the backshell and the Lightning and High Intensity Radiated Frequency (L/HIRF) braid sock.	N/A	110		
429-MM, Chapter 96 2810LA-03	2. Do a detailed inspection of the connector 4296J5 to include the backshell and the L/HIRF braid sock.	N/A	110		
429-MM, Chapter 96 2830LA-01	3. Do a detailed inspection of the connector 4296J2 to include the backshell and the L/HIRF braid sock.	N/A	110		
429-MM, Chapter 96 7320LA-01	4. Do a detailed inspection of the connector 4296J8 to include the backshell and the L/HIRF braid sock.	N/A	110		
429-MM, Chapter 96 7320LA-02	5. Do a detailed inspection of the connector 4296J13 to include the backshell and the L/HIRF braid sock.	N/A	110		
429-MM, Chapter 96 2210LA-01	6. Do a detailed inspection of the connector 4296J3 to include the backshell and the L/HIRF braid sock.	N/A	110		
429-MM, Chapter 96 2210LA-02	7. Do a detailed inspection of the connector 4296P39 to include the backshell and the shielded braid sock.	N/A	110		
429-MM, Chapter 96 2210LA-03	8. Do a detailed inspection of the connector 4296P44 to include the backshell and the shielded braid sock.	N/A	110		
429-MM, Chapter 96 2210LA-04	9. Do a detailed inspection of the connector 6540B1P1 to include the backshell and the L/HIRF braid sock.	N/A	110		
	AVIONICS SYSTEM				
429-MM, Chapter 97 2310LA-01	1. Do a detailed inspection of the connector 3450TR1P4 to include attachment of the coaxial cable.	N/A	211		
429-MM, Chapter 97 2310LA-02	2. Do a detailed inspection of the connector 3450TR2P4 to include attachment of the coaxial cable.	N/A	211		

Table 1. Scheduled Inspections — 2-Year Inspection (continued)

DATA REFERENCE/IMRR TASK NUMBER	TASK DESCRIPTION	ACCESS	ZONES	INITIAL MECH	INITIAL OTHER
429-MM, Chapter 97 3400LA-01	3. Do a detailed inspection of the connector 3450TR1P1 to include attachment of the coaxial cable.	N/A	211		
429-MM, Chapter 97 3400LA-02	4. Do a detailed inspection of the connector 3450TR1P3 to include attachment of the coaxial cable.	N/A	211		
429-MM, Chapter 97 3400LA-03	5. Do a detailed inspection of the connector 3450TR1P5 to include attachment of the coaxial cable.	N/A	211		
429-MM, Chapter 97 3400LA-04	6. Do a detailed inspection of the connector 3450TR1P6 to include attachment of the coaxial cable.	N/A	211		
429-MM, Chapter 97 3400LA-05	7. Do a detailed inspection of the connector 3450TR1P7 to include attachment of the coaxial cable.	N/A	211		
429-MM, Chapter 97 3400LA-06	8. Do a detailed inspection of the connector 3450TR2P1 to include attachment of the coaxial cable.	N/A	211		
429-MM, Chapter 97 3400LA-07	9. Do a detailed inspection of the connector 3450TR2P3 to include attachment of the coaxial cable.	N/A	211		
429-MM, Chapter 97 3400LA-08	10. Do a detailed inspection of the connector 3450TR2P6 to include attachment of the coaxial cable.	N/A	211		
429-MM, Chapter 97 3400LA-09	11. Do a detailed inspection of the connector 3450TR2P7 to include attachment of the coaxial cable.	N/A	211		
429-MM, Chapter 97 3400LA-10	12. Do a detailed inspection of the connector 3450TR2P5 to include attachment of the coaxial cable.	N/A	211		
	13. Deleted				
	ZONAL INSPECTIONS				
600-01	1. Do a general visual inspection of the forward transmission deck area, hydraulic modules, and manifolds.	600B, 600D	610		
600-02	2. Do a general visual inspection of the roof assembly and roof beams.	600CR, 600CL	611		
700-02	3. Do a general visual inspection of the oil cooler compartment to include roof beams and roof panels.	700GL, 700GR	711		
	COMPLETION TASKS				
429-MM, Chapter 06	1. Install panels 100G, 200AL, 200AR, 200BL, 200BR, 200CL, 200DL, 200DR, 200CC, 200CR, 400B, 400C, 500C, 500D, 500F, 600B, 600CL, 600CR, 600D, 600EL, 600ER, 600FL, 600FR, 700BL, 700BR, 700CL, 700CR, 700DL, 700DR, 700GL, and 700GR.				

POST OFFICE BOX 482 • FORT WORTH, TEXAS 76101

Intentionally blank page

POST OFFICE BOX 482 • FORT WORTH, TEXAS 76101

Scheduled Inspections - 3-Year Inspection

Table 1. Scheduled Inspections - 3-Year Inspection

DATA REFERENCE/IMRR TASK NUMBER	TASK DESCRIPTION	ACCESS	ZONES	INITIAL MECH	INITIAL OTHER
	DATE: _____W.O.				
	FACILITY:				
	HELICOPTER S/N:				
	REGISTRY NO.:				
	TOTAL TIME:				
	SIGNATURE:				
	NOTE To be performed every 3 years.				
	GENERAL				
	1. Review helicopter log book and ensure all recorded discrepancies have been corrected.				
	2. Make sure compliance with all necessary airworthiness directives.				
429-A-04-00-00-00A-009A-A / 00007	3. Make sure that life limited parts do not exceed service life.				
429-MM, Chapter 12	4. Make sure that all necessary lubrication tasks have been performed.				
429-A-05-40-00-22A-281A-A / 00043	5. Make sure that all necessary miscellaneous inspections have been performed, as necessary.				
429-MM, Chapter 99	6. Make sure that all necessary inspections of installed BHT kits not covered in this inspection have been performed, as necessary.				
	7. Record accomplishment of this inspection in the helicopter log book.				
429-MM, Chapter 06	**PREPARATION TASKS**				
	1. Remove panels 200AL, 200AR, 600EL, and 600ER.				
	EQUIPMENT AND FURNISHINGS				
429-MM, Chapter 25 251001	1. Do a detailed inspection of the crew seat restraint system.	200AL, 200AR	210, 211		
429-MM, Chapter 25 251002	2. Do an operational check of the crew seat inertia reel.	200AL, 200AR	210, 211		
429-MM, Chapter 25 251003	3. Do a visual check for correct indication on crew seat energy attenuation device.	200AL, 200AR	210, 211		
429-MM, Chapter 25 251004	4. Do a detailed inspection of the crew seat structure.	200AL, 200AR	210, 211		
429-MM, Chapter 25 251005	5. Do a general visual inspection of the crew seat tracks.	200AL, 200AR	210, 211		
429-MM, Chapter 25 251006	6. Do an operational check of the crew seat.	200AL, 200AR	210, 211		

POST OFFICE BOX 482 • FORT WORTH, TEXAS 76101

Table 1. Scheduled Inspections - 3-Year Inspection (continued)

DATA REFERENCE/IMRR TASK NUMBER	TASK DESCRIPTION	ACCESS	ZONES	INITIAL	
				MECH	OTHER
429-MM, Chapter 25 251007	7. Do a detailed inspection of the crew seat mechanism and seat locking devices. **NOTE** Discard interval starts from date of manufacture.	200AL, 200AR	210, 211		
BHT-429-CMM-V, Chapter 99 256321	8. Discard the life raft survival kit first aid kit (if installed).	N/A			
	FLIGHT CONTROLS				
429-MM, Chapter 67 671001	1. Do a detailed inspection of the pilot cyclic stick assembly and copilot cyclic stick assembly, if installed.	200AL, 200AR	210, 211		
429-MM, Chapter 67 671006	2. Do a detailed inspection of the pilot collective stick assembly and copilot collective stick assembly, if installed.	200AL, 200AR	210, 211		
429-MM, Chapter 67 672001	3. Do a detailed inspection of the pilot pedal assembly and copilot pedal assembly, if installed.	200AL, 200AR	110		
	FUEL SYSTEM				
429-MM, Chapter 96 283002	1. Do an operational check of the fuel shut-off valves.	200AL, 200AR, 600EL, 600ER	212, 710		
	COMPLETION TASKS				
429-MM, Chapter 06	1. Install panels 200AL, 200AR, 600EL, and 600AR.				

POST OFFICE BOX 482 • FORT WORTH, TEXAS 76101

Scheduled Inspections - 4-Year Inspection

Table 1. Scheduled Inspections - 4-Year Inspection

DATA REFERENCE/IMRR TASK NUMBER	TASK DESCRIPTION	ACCESS	ZONES	INITIAL MECH	INITIAL OTHER
	DATE: _____W.O.				
	FACILITY:				
	HELICOPTER S/N:				
	REGISTRY NO.:				
	TOTAL TIME:				
	SIGNATURE:				
	NOTE To be done every 4 years.				
	GENERAL				
DELETED	*1. Deleted.*				
	2. Examine the helicopter log book and make sure all the recorded discrepancies have been corrected.				
	3. Make sure of compliance with all the applicable airworthiness directives.				
429-A-04-00-00-00A-009A-A / 00007	4. Make sure the life limited parts do not go over the service life.				
429-MM, Chapter 12	5. Do all necessary lubrication tasks.				
429-A-05-40-00-22A-281A-A / 00043	6. Do all miscellaneous inspections, as necessary.				
429-MM, Chapter 99	7. Do all the inspection tasks for the installed Bell Textron kits not included in this inspection, as necessary.				
	8. Record these inspections as done in the helicopter log book.				
	PREPARATION TASKS				
429-MM, Chapter 06	1. Remove the panels 100EL, 100ER, 100G, 200AL, 200AR, 200BL, 200BR, 200CC, 200CL, 200CR, 200DL, 200DR, 200EL, 200ER, 300IL, 300IR, 300JL, 300JR, 300KL, 300KR, 500A, 500C, 500D, 500F, 500EL, 500ER, 500G, 600CL, 600CR, 600EL, 600ER, 600FL, and 600FR.				
	EQUIPMENT AND FURNISHINGS				
429-MM, Chapter 25 252001	1. Do a detailed inspection of the passenger seat restraint system.	200DL, 200DR, 200EL, 200ER	213, 214		
429-MM, Chapter 25 252002	2. Do an operational check of the passenger seat inertia reel.	200DL, 200DR, 200EL, 200ER	213, 214		
429-MM, Chapter 25 252003	3. Do a detailed inspection of the passenger seat structure.	200DL, 200DR, 200EL, 200ER	213, 214		

POST OFFICE BOX 482 • FORT WORTH, TEXAS 76101

Table 1. Scheduled Inspections - 4-Year Inspection (continued)

DATA REFERENCE/IMRR TASK NUMBER	TASK DESCRIPTION	ACCESS	ZONES	INITIAL MECH	INITIAL OTHER
429-MM, Chapter 25 252004	4. Do a visual inspection of the passenger seat energy attenuation device for the correct indication.	200DL, 200DR, 200EL, 200ER	213, 214		
429-MM, Chapter 28 284001	5. Do a general visual inspection of the auxiliary fuel tank assembly (if installed).	N/A			
	WHEELED LANDING GEAR SYSTEM				
	1. Deleted				
	2. Deleted				
	3. Deleted				
	4. Deleted				
429-MM, Chapter 32 321001-1	5. Do a detailed inspection of the pintle pins and the pintle bushings of the nose wheel landing gear for damage and corrosion.	200CC	314		
429-MM, Chapter 32 321002-1	6. Do a detailed inspection of the pintle pins and the pintle bushings of the main wheels landing gear assembly for damage and corrosion.	N/A	319, 320		
BHT-429-CMM-V, Chapter 32 324003	7. Do a detailed inspection of the Main Landing Gear (MLG) and Nose Landing Gear (NLG) wheel bearings.	N/A	314, 319, 320		
429-MM, Chapter 32 324004	8. Lubricate the wheels of the MLG.	N/A	319, 320		
429-MM, Chapter 32 324005	9. Lubricate the wheel of the NLG.	N/A	314		
BHT-429-CMM-V, Chapter 32 324006	10. Do a detailed inspection of the MLG and NLG wheel hub for damage.	N/A	314, 319, 320		
	SKID LANDING GEAR SYSTEM				
429-MM, Chapter 32 327001-1	1. Do a detailed inspection of the skid landing gear forward and aft crosstubes and skid tubes.	N/A	316		
	TAILBOOM AND EMPENNAGE				
429-MM, Chapter 53 535004-1	1. Do a detailed inspection of the tail rotor gearbox support assembly and the attachment fitting assembly on the vertical fin assembly.	500G	513		
429-MM, Chapter 53 535005-2	2. Do a detailed inspection of the supports of the slat assembly.	N/A	511, 512		
	COWLINGS AND FAIRINGS				
429-MM, Chapter 53 531001	1. Do a general visual inspection of the forward fairing.	600A	610		
429-MM, Chapter 53 531002	2. Do a general visual inspection of the forward cowl assemblies.	600CL, 600CR	610		
	MAIN ROTOR DRIVE SYSTEM				
429-MM, Chapter 63 6310LA-01	1. Do a detailed inspection of the jumper assembly (bonding straps) on the transmission Liquid Inertia Vibration Eliminator (LIVE) mounts.	600FL, 600FR	611		

Table 1. Scheduled Inspections - 4-Year Inspection (continued)

DATA REFERENCE/IMRR TASK NUMBER	TASK DESCRIPTION	ACCESS	ZONES	INITIAL MECH	INITIAL OTHER
429-MM, Chapter 63 631001-1	**NOTE** To be done every 4 years or at 5000 hours of component inspection (task 631002), Restoration of the Main Rotor Transmission Assembly, whichever comes first. 2. Do a detailed inspection of the external top and lower cases of the main rotor transmission assembly.	600EL, 600ER, 600FL, 600FR	611		
	TAIL ROTOR DRIVE SYSTEM				
429-MM, Chapter 65 652001-1	**NOTE** To be done every 4 years or at 5000 hours of component inspection (task 652003), Restoration of the Tail Rotor Gearbox Assembly, whichever comes first. 1. Do a detailed inspection of the tail rotor gearbox assembly.	500G			
	ELECTRICAL SYSTEM				
429-MM, Chapter 96 2310LA-03	1. Do a detailed inspection of the connectors 4296P9 and 4296J9 to include the backshell and the Lightning and High Intensity Radiated Frequency (L/HIRF) braid sock.	N/A	212		
429-MM, Chapter 96 2310LA-04	2. Do a detailed inspection of the connectors 4296P10 and 4296J10 to include the backshell and the L/HIRF braid sock.	N/A	212		
429-MM, Chapter 96 2430LA-01	3. Do a detailed inspection of the connector 2430A1P1 to include the backshell and the L/HIRF braid sock.	N/A	216		
429-MM, Chapter 96 2810LA-01	4. Do a detailed inspection of the connectors 4296P1 and 4296J1 to include the backshell and the L/HIRF braid sock.	N/A	210		
429-MM, Chapter 96 2810LA-04	5. Do a detailed inspection of the connectors 4296P6 and 4296J6 to include the backshell and the L/HIRF braid sock.	N/A	212		
	ZONAL INSPECTIONS				
100-02B	1. Do a general visual inspection of the Left Hand (LH) and Right Hand (RH) lower nose compartment and the lower nose external skins including the MX-10 WESCAM camera or the Nightsun SX-5 Starburst searchlight, if either kit is installed.	N/A	110		
100-04	2. Do a general visual inspection of the upper nose compartment external skins and access panels.	N/A	111		
100-06	3. Do a general visual inspection of the external surfaces of the nose cap or radome.	100A	112		
200-06	4. Do a general visual inspection of the internal areas of the LH cabin area.	200DL, 200EL	213		
200-08	5. Do a general visual inspection of the internal areas of the RH cabin area.	200DR, 200ER	214		
300-07	6. Do a general visual inspection of the internal areas of the LH cockpit underfloor, to include lower sidebody and keel beam.	200BL, 200CL	313		

POST OFFICE BOX 482 • FORT WORTH, TEXAS 76101

Table 1. Scheduled Inspections - 4-Year Inspection (continued)

DATA REFERENCE/IMRR TASK NUMBER	TASK DESCRIPTION	ACCESS	ZONES	INITIAL	
				MECH	OTHER
300-09	7. Do a general visual inspection of the internal areas of the RH cockpit underfloor, to include lower sidebody and keel beam.	200BR, 200CR	315		
300-14	8. Do a general visual inspection of the external portions of the forward and aft crosstubes and the LH and RH skid tubes.	N/A	316, 317, 318		
300-15	9. Do a general visual inspection of the internal areas of the center cockpit under the floor, to include the keel beam (wheeled landing gear only).	200CC	314		
300-16	10. Do a general visual inspection of the internal areas of the LH and RH sponson (wheeled landing gear only).	300IL, 300IR, 300JL, 300JR, 300KL, 300KR	319, 320		
300-17	11. Do a general visual inspection of the external areas of the LH and RH sponson (wheeled landing gear only).	N/A	319, 320		
500-01	12. Do a general visual inspection of the internal areas of the tailboom and the aft fuselage-to-tailboom frame, spar tube, and spar tube fitting.	500A, 500C, 500D, 500EL, 500ER, 500F	510, 511, 512		
500-02B	13. Do a general visual inspection of the tailboom structure including the TrakkaBeam A800 spotlight or the Nightsun SX-5 Starburst searchlight and/or the CI 292-3 FM and HF towel bar antennas, if either kit is installed, vertical fin support fitting and tail rotor gearbox fairings.	N/A	510		
500-04	14. Do a general visual inspection of the external surfaces of the LH horizontal stabilizer and auxiliary fin assembly.	N/A	511		
500-06	15. Do a general visual inspection of the external surfaces of the RH horizontal stabilizer and auxiliary fin assembly.	N/A	512		
500-08	16. Do a general visual inspection of the external surfaces of the vertical fin.	N/A	513		
100-07E-01	17. Clean the left side lower nose compartment wiring and harness assemblies to remove contaminants, dust, and lint build-up (wheeled landing gear only).	100EL, 200AL	110		
100-07E-02	18. Clean the right side lower nose compartment wiring and harness assemblies to remove contaminants, dust, and lint build-up (wheeled landing gear only).	100ER, 200AR	110		
100-07E-03	19. Do a general visual inspection of the wiring near the hydraulic brake lines located in the pilot lower nose compartment (wheeled landing gear only).	100ER, 200AR	110		
100-07E-04	20. Do a general visual inspection of the wiring near the hydraulic brake lines located in the copilot lower nose compartment (wheeled landing gear only).	100EL, 200AL	110		

POST OFFICE BOX 482 • FORT WORTH, TEXAS 76101

Table 1. Scheduled Inspections - 4-Year Inspection (continued)

DATA REFERENCE/IMRR TASK NUMBER	TASK DESCRIPTION	ACCESS	ZONES	INITIAL	
				MECH	OTHER
100-07E-05	21. Do a general visual inspection of the wiring near the hydraulic brake lines located in the center lower nose compartment (wheeled landing gear only).	100G	110		
100-07E-06	22. Do a general visual inspection of the wiring near the parking brake valve spring located in the copilot lower nose compartment (wheeled landing gear only).	100EL, 200AL	110		
	COMPLETION TASKS				
429-MM, Chapter 06	1. Install the panels 100EL, 100ER, 100G, 200AL, 200AR, 200BL, 200BR, 200CC, 200CL, 200CR, 200DL, 200DR, 200EL, 200ER, 300IL, 300IR, 300JL, 300JR, 300KL, 300KR, 500A, 500C, 500D, 500F, 500EL, 500ER, 500G, 600CL, 600CR, 600EL, 600ER, 600FL, and 600FR.				

POST OFFICE BOX 482 • FORT WORTH, TEXAS 76101

Intentionally blank page

POST OFFICE BOX 482 • FORT WORTH, TEXAS 76101

Scheduled Inspections - 5-Year Inspection

Table 1. Scheduled Inspections - 5-Year Inspection

DATA REFERENCE/IMRR TASK NUMBER	TASK DESCRIPTION	ACCESS	ZONES	INITIAL MECH	INITIAL OTHER
	DATE: _____W.O.				
	FACILITY:				
	HELICOPTER S/N:				
	REGISTRY NO.:				
	TOTAL TIME:				
	SIGNATURE:				
	NOTE To be performed every 5 years.				
	GENERAL				
	1. Review helicopter log book and ensure all recorded discrepancies have been corrected.				
	2. Make sure compliance with all applicable airworthiness directives.				
429-A-04-00-00-00A-009A-A / 00007	3. Make sure life limited parts do not exceed service life.				
429-MM, Chapter 12	4. Make sure that all necessary lubrication tasks have been performed.				
429-A-05-40-00-22A-281A-A / 00043	5. Make sure that all necessary miscellaneous inspections have been performed, as necessary.				
429-MM, Chapter 99	6. Make sure that all necessary inspections of installed BHT kits not covered in this inspection have been performed, as necessary.				
	7. Record accomplishment of this inspection in the helicopter log book.				
	PREPARATION TASKS				
429-MM, Chapter 06	1. Remove panels 200AL, 200AR, 200DL, 200DR, 200EL, 200ER, and 200F.				
	FUSELAGE				
429-MM, Chapter 53 533006-1	1. Do a general visual inspection of the cockpit, cabin, and baggage compartment floors.	200AL, 200AR, 200DL, 200DR, 200EL, 200ER, 200F	210, 211, 213, 214, 216		
	TAIL ROTOR SYSTEM				
429-MM, Chapter 64 642001-1	1. Do a detailed inspection of the visible portions of the tail rotor hub assembly with the tail rotor mast nut, yokes, metallic portion of the flapping bearings, blade bolts, and curvic coupling for corrosion and mechanical damage.		500		
429-MM, Chapter 64 429-MM, Chapter 67 643001-1	2. Do a detailed inspection of the tail rotor rotating controls with the crosshead, drive plate, pitch links, trunnion assembly, lever assembly, idler link assembly, pitch change horns, clevis fitting assembly, visible portion of the pitch change shaft, and input rod assembly.		500		

POST OFFICE BOX 482 • FORT WORTH, TEXAS 76101

Table 1. Scheduled Inspections - 5-Year Inspection (continued)

DATA REFERENCE/IMRR TASK NUMBER	TASK DESCRIPTION	ACCESS	ZONES	INITIAL	
				MECH	OTHER
	ZONAL INSPECTIONS				
100-01E-03	1. Do a general visual inspection of the wiring directly below the pilot pedal linkages.	200AR	110		
100-01E-04	2. Do a general visual inspection of the wiring directly below the copilot pedal linkages.	200AL	110		
	COMPLETION TASKS				
429-MM, Chapter 06	1. Install panels 200AL, 200AR, 200DL, 200DR, 200EL, 200ER, and 200F.				

POST OFFICE BOX 482 • FORT WORTH, TEXAS 76101

Scheduled Inspections - 6-Year Inspection

Table 1. Scheduled Inspections - 6-Year Inspection

DATA REFERENCE/IMRR TASK NUMBER	TASK DESCRIPTION	ACCESS	ZONES	INITIAL MECH	INITIAL OTHER
	DATE: _____W.O.				
	FACILITY:				
	HELICOPTER S/N:				
	REGISTRY NO.:				
	TOTAL TIME:				
	SIGNATURE:				
	NOTE To be done every 6 years.				
	GENERAL				
	1. Deleted.				
	2. Deleted.				
	3. Review helicopter log book and make sure that all recorded discrepancies have been corrected.				
	4. Make sure of compliance with all the applicable airworthiness directives.				
429-A-04-00-00-00A-009A-A / 00007	5. Make sure the life limited parts do not go over the service life.				
429-MM, Chapter 12	6. Do all the lubrication tasks, as necessary.				
429-A-05-40-00-22A-281A-A / 00043	7. Do all miscellaneous inspections, as necessary.				
429-MM, Chapter 99	8. Do all the inspection tasks for the installed Bell Textron kits not included in this inspection, as necessary.				
	9. Record these inspections as done in the helicopter log book.				
	PREPARATION TASKS				
429-MM, Chapter 06	1. Remove the panels 100A, 100DL, 100DR, 100F, 100G, 200AL, 200AR, 200BL, 200BR, 200DL, 200DR, 200EL, 200ER, 200F, 200G, 300AL, 300AR, 300BL, 300BR, 300CL, 300CR, 300D, 300E, 300F, 300G, 300H, 300IL, 300IR, 300JL, 300JR, 300KL, 300KR, 400A, 400B, 400C, 500C, 500D, 500EL, 500ER, 500G, 600EL, 600ER, 600FL, and 600FR.				
	FUSELAGE				
429-799-049 252101	1. Do a detailed inspection of the single or the dual patient restraint litter for cracks and dents, if patient restraint kit (429-799-049) is installed.	200DL, 200DR	200		
429-799-049 252102	2. Do a detailed inspection of the single or the dual patient restraint belt webbing and buckle for condition, if patient restraint kit (429-799-049) is installed.	200DL, 200DR	200		
429-799-049 252104	3. Do a general visual inspection of the single or dual patient restraint tiedown fitting, if patient restraint kit (429-799-049) is installed.	200DL, 200DR	200		

POST OFFICE BOX 482 • FORT WORTH, TEXAS 76101

Table 1. Scheduled Inspections - 6-Year Inspection (continued)

DATA REFERENCE/IMRR TASK NUMBER	TASK DESCRIPTION	ACCESS	ZONES	INITIAL	
				MECH	OTHER
429-799-049 252201	4. Do a general visual inspection of the dual patient restraint aft attachment assembly, if patient restraint kit (429-799-049) is installed.	200DL, 200DR	200		
429-MM, Chapter 53 532002-1	5. Do a detailed inspection of the nose shelf, pedestal, nose forward bulkhead, and nose aft bulkhead.	100A, 100DL, 100DR, 200AL, 200AR	100, 212		
429-MM, Chapter 53 532003-1	6. Do a detailed inspection of the battery compartment.	100DL, 100DR, 200AL, 200AR	100		
429-MM, Chapter 53 533001-1	7. Do a detailed inspection of the anti-plough bulkhead, cabin forward bulkhead, forward lift frame, and keel beams.	200BL, 200BR	313, 315		
429-MM, Chapter 53 533002-1	8. Do a detailed inspection of the Left Hand (LH) and Right Hand (RH) compartments of the sidebody panels and the outboard surfaces of the keel beams (all aircraft).	300AL, 300AR, 300BL, 300BR, 300CL, 300CR	300		
429-MM, Chapter 32 and 429-MM, Chapter 53 533002-2	9. Do a detailed inspection of the crosstube frame and the sponson attachment bolt at mid lift frame, if wheeled landing gear is installed.	300AL, 300AR, 300BL, 300BR, 300CL, 300CR	300		
429-MM, Chapter 53 533003-1	10. Do a detailed inspection of the inboard surfaces of the keel beams.	300D, 300E, 300F, 300G, 300H	311		
429-MM, Chapter 32 and 429-MM, Chapter 53 533011-1	11. Do a detailed inspection of the anti-plough bulkhead, cabin forward bulkhead, forward lift frame (below floor), keel beams, pedestal beams, actuator fitting, and nose landing gear attachment bushings, if wheeled landing gear is installed.	300AL, 300AR, 300BL, 300BR	300		
429-MM, Chapter 32 and 429-MM, Chapter 53 533012-1	12. Do a detailed inspection of the upper and lower skins and interior areas of the LH and RH sponson between the inboard/outboard frames, forward/aft spar, actuator fitting, splice strap, and attachment fittings bolts and bushings for damage and corrosion (wheeled landing gear only).	N/A	319, 320		
429-MM, Chapter 32 and 429-MM, Chapter 53 533012-2	13. Do a detailed inspection of the LH and RH sponson interior spars and ribs in areas under the leading edge, trailing edge, and outboard fairing (wheeled landing gear only).	300IL, 300IR, 300JL, 300JR, 300KL, 300KR	319, 320		
429-MM, Chapter 53 534001-1	14. Do a detailed inspection of the aft fuselage-to-tailboom frame, splices, and panels.	400B, 400C	410, 411		
429-MM, Chapter 53 535003-1	15. Do a detailed inspection of the aft fuselage-to-tailboom frame.	400C, 500C	510		

Table 1. Scheduled Inspections - 6-Year Inspection (continued)

DATA REFERENCE/IMRR TASK NUMBER	TASK DESCRIPTION	ACCESS	ZONES	INITIAL MECH	INITIAL OTHER
429-MM, Chapter 53 535003-2	16. Do a detailed inspection of the horizontal stabilizer spar tube assembly and spar tube fitting.	500D, 500EL, 500ER	511, 512		
429-MM, Chapter 53 535006-1	17. Do a special detailed inspection of the internal skin, internal frames, ribs and support fittings of the horizontal stabilizers.	500EL, 500ER	511, 512		
429-MM, Chapter 53 535008-1	18. Do a special detailed inspection of the internal surfaces of the vertical fin assembly, vertical fin fitting assembly, and tail skid fitting.	500G	513		
BHT-429-CMM-V, Chapter 97 313009	19. Discard the Underwater Locator Beacon (ULB) battery.	N/A			
	MAIN ROTOR DRIVE SYSTEM				
429-MM, Chapter 62 622001-1	1. Do a detailed inspection of the main rotor grip horn assemblies, upper mount, lower mount, lead lag damper sets, Centrifugal Force (CF) bearings, and shear bearings.	600EL, 600ER, 600FL, 600FR	611		
429-MM, Chapter 62 622001-2	2. Do a detailed inspection of the yoke assemblies.		611		
429-MM, Chapter 62 623001-1	3. Do a detailed inspection of the swashplate inner and outer rings, collective lever, and the visible areas of the tilt ball and sleeve assemblies as well as the pitch links for corrosion and mechanical damage.	600EL, 600ER, 600FL, 600FR	611		
	ZONAL INSPECTIONS				
100-01	1. Do a general visual inspection of the internal areas of the lower nose compartment.	100F, 100G, 200AL, 200AR	110		
100-02A	2. Do a general visual inspection of the external areas of LH and RH lower nose compartment.	N/A	110		
100-03	3. Do a general visual inspection of the internal areas of the upper nose compartment.	100A, 100DL, 100DR	111		
100-07	4. Do a general visual inspection of the internal areas of the LH, RH, and center lower nose compartment (wheeled landing gear only).	100F, 100G, 200AR, 200AL	110		
200-01	5. Do a general visual inspection of the internal areas of the LH cockpit, to include flight controls, floor panels, forward lift frame and crew seat tracks.	200AL	210		
200-02	6. Do a general visual inspection of external areas of the LH cockpit, to include the sidebody panels and the crew door.	N/A	210		
200-03	7. Do a general visual inspection of the internal areas of the RH cockpit, to include flight controls, floor panels, forward lift frame and seat track.	N/A	211		
200-04	8. Do a general visual inspection of the external areas of the RH cockpit, to include the sidebody panels and the crew door.	N/A	211		

POST OFFICE BOX 482 • FORT WORTH, TEXAS 76101

Table 1. Scheduled Inspections - 6-Year Inspection (continued)

DATA REFERENCE/IMRR TASK NUMBER	TASK DESCRIPTION	ACCESS	ZONES	INITIAL	
				MECH	OTHER
200-07	9. Do a general visual inspection of the external areas of the LH cabin area, to include the sidebody panels and the cabin doors.	N/A	213		
200-09	10. Do a general visual inspection of the external areas of the RH cabin area, to include the sidebody panels and the cabin doors.	200G	214		
200-10	11. Do a general visual inspection of the cabin roof panel and upper cabin lift frames.	200EL, 200ER	215		
200-11	12. Do a general visual inspection of the internal areas of the baggage compartment.	200F	216		
200-12	13. Do a general visual inspection of the external areas of the baggage compartment, to include the sidebody panels and the baggage compartment door.	N/A	216		
300-01	14. Do a general visual inspection of the internal areas of the LH cabin underfloor, to include the keel beam, forward and aft crosstube frames, internal surface of the sidebody panel skins, and fuselage hydraulic brake lines for leakage and damage (wheeled landing gear only), Nightsun SX-5 Starburst searchlight junction box (if installed).	300AL, 300BL, 300CL	310		
300-01E-01	15. Do a general visual inspection of the wiring in the area of the fuel system components and lines.	300AL, 300BL	310		
300-02	16. Do a general visual inspection of the external areas of the LH cabin underfloor, to include the lower sidebody and access panels.	N/A	310		
300-03	17. Do a general visual inspection of the internal areas of the center cabin underfloor, to include the keel beams and bulkheads.	300D, 300E, 300F, 300G, 300H	311		
300-05	18. Do a general visual inspection of the internal areas of the RH cabin underfloor, to include the lower sidebody keel beam, and the forward and aft crosstube frames.	N/A	312		
300-05E-01	19. Do a general visual inspection of the wiring in the area of the fuel system components and lines.	300AL, 300BL	312		
300-06	20. Do a general visual inspection of the external areas of the RH cabin underfloor, to include the lower sidebody and access panels.	300AR, 300BR, 300CR	312		
300-08	21. Do a general visual inspection of the external areas of the LH cockpit underfloor, to include the lower sidebody and access panels.	N/A	313		
300-10	22. Do a general visual inspection of the external areas of the RH cockpit underfloor, to include the lower sidebody, access panels and antennas (if installed).	N/A	314		
400-01	23. Do a general visual inspection of the aft avionics compartment.	400A, 400B	410		
400-02	24. Do a general visual inspection of the aft controls compartment.	400A, 400C	411		

Table 1. Scheduled Inspections - 6-Year Inspection (continued)

DATA REFERENCE/IMRR TASK NUMBER	TASK DESCRIPTION	ACCESS	ZONES	INITIAL	
				MECH	OTHER
400-03	25. Do a general visual inspection of the internal portions of the aft fuselage and the transition section.	400A, 400C,	410, 411, 412, 413		
400-04	26. Do a general visual inspection of the external portions of the aft fuselage and the transition section.	N/A	410, 411, 412, 413		
	27. Deleted				
500-02A	28. Do a general visual inspection of the external portions of the tailboom structure, the vertical fin support fitting and the tail rotor gearbox fairings.	N/A	510, 513		
500-03	29. Do a general visual inspection of the internal portions of the LH horizontal stabilizer and the auxiliary fin assembly.	500EL	511		
500-05	30. Do a general visual inspection of the internal portions of the RH horizontal stabilizer and the auxiliary fin assembly.	500ER	512		
Deleted	*31. Deleted.*				
	COMPLETION TASKS				
429-MM, Chapter 06	1. Install the panels 100A, 100DL, 100DR, 100F, 100G, 200AL, 200AR 200BL, 200BR, 200DL, 200DR 200EL, 200ER, 200F, 200G, 300AL, 300AR, 300BL, 300BR, 300CL, 300CR, 300D, 300E, 300F, 300G, 300H, 300IL, 300IR, 300JL, 300JR, 300KL, 300KR, 400A, 400B, 400C, 500C, 500D, 500EL, 500ER, 500G, 600EL, 600ER, 600FL, and 600FR.				

POST OFFICE BOX 482 • FORT WORTH, TEXAS 76101

Intentionally blank page

POST OFFICE BOX 482 • FORT WORTH, TEXAS 76101

Scheduled Inspections - 7-Year Inspection

Procedure

Table 1. Scheduled Inspections - 7-Year Inspection

DATA REFERENCE/IMRR TASK NUMBER	TASK DESCRIPTION	ACCESS	ZONES	INITIAL	
				MECH	OTHER
	DATE: _____W.O.				
	FACILITY:				
	HELICOPTER S/N:				
	REGISTRY NO.:				
	TOTAL TIME:				
	SIGNATURE:				
429-A-04-00-00-00A-009A-A / 00007 SX-5 Starburst Maintenance Manual 334303	**NOTE** To be performed every 7 years. **GENERAL** 1. Review helicopter log book and ensure all recorded discrepancies have been corrected. 2. Ensure compliance with all applicable airworthiness directives. 3. Ensure life limited parts do not exceed service life. 4. Discard the spectrolab SX-5 gimbal arm assemblies (if installed).	NA			

POST OFFICE BOX 482 • FORT WORTH, TEXAS 76101

Intentionally blank page

POST OFFICE BOX 482 • FORT WORTH, TEXAS 76101

Scheduled Inspections - 8-Year Inspection

Table 1. Scheduled Inspections - 8-Year Inspection

DATA REFERENCE/IMRR TASK NUMBER	TASK DESCRIPTION	ACCESS	ZONES	INITIAL MECH	INITIAL OTHER
	DATE: _____W.O.				
	FACILITY:				
	HELICOPTER S/N:				
	REGISTRY NO.:				
	TOTAL TIME:				
	SIGNATURE:				
	NOTE To be performed every 8 years.				
	GENERAL				
DELETED	*1. Deleted.*				
DELETED	*2. Deleted.*				
	3. Review helicopter log book and make sure that all recorded discrepancies have been corrected.				
	4. Do all necessary airworthiness directives.				
429-A-04-00-00-00A-009A-A / 00007	5. Make sure that life limited parts do not exceed service life.				
429-MM, Chapter 12	6. Do all necessary lubrication tasks.				
429-A-05-40-00-22A-281A-A / 00043	7. Do all miscellaneous inspections, as necessary.				
429-MM, Chapter 99	8. Do all inspection tasks for installed BHT kits not included in this inspection, as necessary.				
	9. Record accomplishment of this inspection in the helicopter log book.				
	PREPARATION TASKS				
429-MM, Chapter 06	1. Remove panels 200BL, 200BR, 200CC, 200DL, 200EL, 200F, 500F, and 500G.				
	TAIL ROTOR DRIVE SYSTEM				
429-MM, Chapter 65 6520LA-01	1. Do a detailed inspection of the bonding strap attached to the tail rotor gearbox.	500G, 500F	510		
	ZONAL INSPECTIONS				
200-11E-01	1. Do a general visual inspection of the wiring in the area of the fuel system components and lines.	200F	216		
200-05	2. Do a general visual inspection of the center pedestal area.	200DL, 200EL	212		
300-04	3. Do a general visual inspection of the external areas of the center cabin underfloor, to include belly panels but not cargo hook and dual cargo hook fairings.	N/A	311		
300-11	4. Do a general visual inspection of the internal areas of the center cockpit underfloor, to include keel beams (skid landing gear only).	200CC	314		
300-12	5. Do a general visual inspection of the external areas of the center cockpit underfloor, to include access panels.	N/A	314		

POST OFFICE BOX 482 • FORT WORTH, TEXAS 76101

Table 1. Scheduled Inspections - 8-Year Inspection (continued)

DATA REFERENCE/IMRR TASK NUMBER	TASK DESCRIPTION	ACCESS	ZONES	INITIAL	
				MECH	OTHER
300-13	6. Do a general visual inspection of the forward crosstube portions that are located inside the airframe under floor and aft crosstubes.	200BL, 200CC, 200BR	317, 318		
429-MM, Chapter 06	**COMPLETION TASKS** 1. Install panels 200BL, 200BR, 200CC, 200DL, 200EL, 200F, 500F, and 500G.				

POST OFFICE BOX 482 • FORT WORTH, TEXAS 76101

Scheduled Inspections - 10-Year Inspection

Table 1. Scheduled Inspections - 10-Year Inspection

DATA REFERENCE/IMRR TASK NUMBER	TASK DESCRIPTION	ACCESS	ZONES	INITIAL MECH	INITIAL OTHER
	DATE: _____W.O.				
	FACILITY:				
	HELICOPTER S/N:				
	REGISTRY NO.:				
	TOTAL TIME:				
	SIGNATURE:				
	NOTE To be performed every 10 years.				
	GENERAL				
DELETED	*1. Deleted.*				
DELETED	*2. Deleted.*				
	3. Review helicopter log book and make sure that all recorded discrepancies have been corrected.				
	4. Do all necessary airworthiness directives.				
429-A-04-00-00-00A-009A-A / 00007	5. Make sure that life limited parts do not exceed service life.				
429-MM, Chapter 12	6. Do all necessary lubrication tasks.				
429-A-05-40-00-22A-281A-A / 00043	7. Do all miscellaneous inspections, as necessary.				
429-MM, Chapter 99	8. Do all inspection tasks for installed BHT kits not included in this inspection, as necessary.				
	9. Record accomplishment of this inspection in the helicopter log book.				
	PREPARATION TASKS				
429-MM, Chapter 06	1. Remove panels 100A, 200F, 400B, and 600A.				
	FIRE PROTECTION				
	1. Deleted.				
BHT-429-CMM-V, Chapter 26 262004	2. Discard the pyrotechnic squib of the main fire extinguisher bottle in accordance with vendor recommendations.	400B	410		
429-MM, Chapter 26 262005	3. Do a detailed inspection of the fire extinguisher discharge lines, in the aft avionics compartment.	400B	410		
	4. Deleted.				
	5. Deleted.				
429-MM, Chapter 96 263001	6. Do a functional check of the fire extinguisher electrical system.	400B	410		
	FUEL SYSTEM				
BHT-429-CMM-V, Chapter 28 281006	1. Do an operational check of the roll over valve.	200F, 600A	412, 610		
	FUSELAGE				

POST OFFICE BOX 482 • FORT WORTH, TEXAS 76101

Table 1. Scheduled Inspections - 10-Year Inspection (continued)

DATA REFERENCE/IMRR TASK NUMBER	TASK DESCRIPTION	ACCESS	ZONES	INITIAL	
				MECH	OTHER
429-799-049 252103	1. Do a restoration (overhaul) of the single or dual patient restraint shoulder harness and lap end assemblies, if patient restraint kit (429-799-049) is installed.	N/A			
	ZONAL INSPECTIONS				
100-05	1. Do a general visual inspection of the internal areas of the nose cap or radome and battery access door (if installed).	100A	112		
	COMPLETION TASKS				
429-MM, Chapter 06	1. Install panels 100A, 200F, 400B and 600A.				

POST OFFICE BOX 482 • FORT WORTH, TEXAS 76101

Scheduled Inspections - 12-Year Inspection

Procedure

Table 1. Scheduled Inspections - 12-Year Inspection

DATA REFERENCE/IMRR TASK NUMBER	TASK DESCRIPTION	ACCESS	ZONES	INITIAL MECH	INITIAL OTHER
	DATE: _____W.O.				
	FACILITY:				
	HELICOPTER S/N:				
	REGISTRY NO.:				
	TOTAL TIME:				
	SIGNATURE:				
429-A-04-00-00-00A-009A-A / 00007 429-MM, Chapter 26 262202	**NOTE** To be performed every 12 years. **GENERAL** 1. Review helicopter log book and ensure all recorded discrepancies have been corrected. 2. Ensure compliance with all applicable airworthiness directives. 3. Ensure life limited parts do not exceed service life. *4. Discard the portable fire extinguisher (if installed). Applicable to RT Protection RT-A1200 and Ansul 429107.*	N/A	200		

POST OFFICE BOX 482 • FORT WORTH, TEXAS 76101

Intentionally blank page

POST OFFICE BOX 482 • FORT WORTH, TEXAS 76101

Scheduled Inspections - 5000-Hour Inspection

Table 1. Scheduled Inspections - 5000-Hour Inspection

DATA REFERENCE/IMRR TASK NUMBER	TASK DESCRIPTION	ACCESS	ZONES	INITIAL MECH	INITIAL OTHER
	DATE: _____W.O.				
	FACILITY:				
	HELICOPTER S/N:				
	REGISTRY NO.:				
	TOTAL TIME:				
	SIGNATURE:				
	NOTE To be performed every 5000 hours of component operating time.				
	GENERAL				
	1. Review helicopter log book and make sure that all recorded discrepancies have been corrected.				
	2. Do all necessary airworthiness directives.				
429-A-04-00-00-00A-009A-A / 00007	3. Make sure that life limited parts do not exceed service life.				
429-MM, Chapter 12	4. Do all necessary lubrication tasks.				
429-A-05-40-00-22A-281A-A / 00043	5. Do all miscellaneous inspections, as necessary.				
	6. Record accomplishment of this inspection in the helicopter log book.				
	PREPARATION TASKS				
429-MM, Chapter 06	1. Remove panels 600EL, 600ER, 600FL, 600FR, and 700GR.				
	MAIN ROTOR				
	NOTE Task to be done each time the main rotor hub assembly is removed from the aircraft.				
	NOTE Deleted				
429-MM, Chapter 62 622002	1. Do a detailed inspection of the lower cone and upper cone assembly.	N/A	611		
	TAIL ROTOR				
429-MM, Chapter 64 642002	1. Do a detailed inspection of the cone set assembly.	N/A	510		
	TAIL ROTOR DRIVE SYSTEM				
429-MM, Chapter 65 651005	1. Do a detailed inspection of the forward driveshaft assembly.	600EL, 600ER, 600FL, 600FR, 700GR	710		

POST OFFICE BOX 482 • FORT WORTH, TEXAS 76101

Table 1. Scheduled Inspections - 5000-Hour Inspection (continued)

DATA REFERENCE/IMRR TASK NUMBER	TASK DESCRIPTION	ACCESS	ZONES	INITIAL	
				MECH	OTHER
429-MM, Chapter 06	**COMPLETION TASKS** 1. Install panels 600EL, 600ER, 600FL, 600FR, and 700GR.				

POST OFFICE BOX 482 • FORT WORTH, TEXAS 76101

Scheduled Inspections - 6000-Hour Inspection

Table 1. Scheduled Inspections - 6000-Hour Inspection

DATA REFERENCE/IMRR TASK NUMBER	TASK DESCRIPTION	ACCESS	ZONES	INITIAL MECH	INITIAL OTHER
	DATE: _____W.O.				
	FACILITY:				
	HELICOPTER S/N:				
	REGISTRY NO.:				
	TOTAL TIME:				
	SIGNATURE:				
429-A-04-00-00-00A-009A-A / 00007 429-MM, Chapter 12 429-A-05-40-00-22A-281A-A / 00043 429-MM, Chapter 99	**NOTE** Deleted. **GENERAL** 1. Review helicopter log book and ensure all recorded discrepancies have been corrected. 2. Ensure compliance with all applicable airworthiness directives. 3. Ensure life limited parts do not exceed service life. 4. Ensure all required lubrication tasks have been performed. 5. Ensure all required miscellaneous inspections have been performed, as applicable. 6. Ensure all required inspections of installed BHT kits not covered in this inspection have been performed, as applicable. 7. Record accomplishment of this inspection in the helicopter log book. **PREPARATION TASKS** None **POWER PLANT**				
BHT-429-CMM-V, Chapter 71 716102	**NOTE** To be performed every 6000 hours of operating time or following 15 cleaning tasks on the inlet barrier filter assemblies, whichever comes first. 1. Replace the upper and lower filter assemblies of each inlet barrier filter, if installed. **COMPLETION TASKS** None	N/A	710		

POST OFFICE BOX 482 • FORT WORTH, TEXAS 76101

Intentionally blank page

POST OFFICE BOX 482 • FORT WORTH, TEXAS 76101

Scheduled Inspections - 8000-Hour Inspection

Table 1. Scheduled Inspections - 8000-Hour Inspection

DATA REFERENCE/IMRR TASK NUMBER	TASK DESCRIPTION	ACCESS	ZONES	INITIAL MECH	INITIAL OTHER
	DATE: _____W.O.				
	FACILITY:				
	HELICOPTER S/N:				
	REGISTRY NO.:				
	TOTAL TIME:				
	SIGNATURE:				
	NOTE To be performed every 8000 hours of operating time.				
	GENERAL				
	1. Review helicopter log book and make sure that all recorded discrepancies have been corrected.				
	2. Do all necessary airworthiness directives.				
429-A-04-00-00-00A-009A-A / 00007	3. Make sure that life limited parts do not exceed service life.				
429-MM, Chapter 12	4. Do all necessary lubrication tasks.				
429-A-05-40-00-22A-281A-A / 00043	5. Do all miscellaneous inspections, as necessary.				
429-MM, Chapter 99	6. Do all inspection tasks for installed BHT kits not included in this inspection, as necessary.				
	7. Record accomplishment of this inspection in the helicopter log book.				
	PREPARATION TASKS				
429-MM, Chapter 06	1. Remove panels 100DL, 200AL, 200AR, 200F, and 400B.				
	DC POWER SYSTEM				
429-MM, Chapter 96 246003	*1. Do an operational check of the non-essential bus feeder diodes (2430CR2 and 2430CR3).*	200 AL, 200AR, 200F	216		
429-MM, Chapter 96 246002	2. Do an operational check of the emergency bus feeder diodes (2450CR1 and 2450CR2).	200 AL, 200AR, 200F	111		
429-MM, Chapter 96 246005	3. Discard the bus interconnect disable relay (2430K7).	100DL	111		
429-MM, Chapter 96 243001	4. Do a functional check of GRCUs (2430VR1 and 2430VR2).	400B	410		

POST OFFICE BOX 482 • FORT WORTH, TEXAS 76101

Table 1. Scheduled Inspections - 8000-Hour Inspection (continued)

DATA REFERENCE/IMRR TASK NUMBER	TASK DESCRIPTION	AC-CESS	ZON-ES	INITIAL	
				ME-CH	OTH-ER
	COMPLETION TASKS				
429-MM, Chapter 06	1. Install panels 100DL, 200AL, 200AR, 200F, and 400B.				

POST OFFICE BOX 482 • FORT WORTH, TEXAS 76101

Scheduled Inspections - 10,000-Hour Inspection

Table 1. Scheduled Inspections - 10,000-Hour Inspection

DATA REFERENCE/IMRR TASK NUMBER	TASK DESCRIPTION	ACCESS	ZONES	INITIAL MECH	INITIAL OTHER
	DATE: _____W.O.				
	FACILITY:				
	HELICOPTER S/N:				
	REGISTRY NO.:				
	TOTAL TIME:				
	SIGNATURE:				
	NOTE To be performed every 10,000 hours of operating time.				
	GENERAL				
DELETED	*1. Deleted.*				
	2. Review helicopter log book and make sure that all recorded discrepancies have been corrected.				
	3. Do all necessary airworthiness directives.				
429-A-04-00-00-00A-009A-A / 00007	4. Make sure that life limited parts do not exceed service life.				
429-MM, Chapter 12	5. Do all necessary lubrication tasks.				
429-A-05-40-00-22A-281A-A / 00043	6. Do all miscellaneous inspections, as necessary.				
429-MM, Chapter 99	7. Do all inspection tasks for installed BHT kits not included in this inspection, as necessary.				
	8. Record accomplishment of this inspection in the helicopter log book.				
	PREPARATION TASKS				
429-MM, Chapter 06	1. Remove panels 300G, and 300H.				
	FUEL SYSTEM				
429-MM, Chapter 28 283001	1. Do a detailed inspection of the inlet screen installed in the mid-forward fuel cell or mid-aft fuel cell for obstruction, as necessary.	300G, 300H	311		
	COMPLETION TASKS				
429-MM, Chapter 06	1. Install panels 300G, and 300H.				

POST OFFICE BOX 482 • FORT WORTH, TEXAS 76101

Intentionally blank page

POST OFFICE BOX 482 • FORT WORTH, TEXAS 76101

Scheduled Inspections - 15,000-Hour or 15-Year Inspection

Table 1. Scheduled Inspections - 15,000-Hour or 15-Year Inspection

DATA REFERENCE/IMRR TASK NUMBER	TASK DESCRIPTION	ACCESS	ZONES	INITIAL MECH	INITIAL OTHER
	DATE: _____W.O.				
	FACILITY:				
	HELICOPTER S/N:				
	REGISTRY NO.:				
	TOTAL TIME:				
	SIGNATURE:				
	NOTE To be performed every 15000 hours of operating time or 15 years, whichever occurs first.				
	GENERAL				
	1. Deleted.				
DELETED	*2. Deleted.*				
DELETED	*3. Deleted.*				
DELETED	*4. Deleted.*				
DELETED	*5. Deleted.*				
DELETED	*6. Deleted.*				
DELETED	*7. Deleted.*				
	8. Review helicopter log book and make sure that all recorded discrepancies have been corrected.				
	9. Do all necessary airworthiness directives.				
429-A-04-00-00-00A-009A-A / 00007	10. Make sure that life limited parts do not exceed service life.				
429-MM, Chapter 12	11. Do all necessary lubrication tasks.				
429-A-05-40-00-22A-281A-A / 00043	12. Do all miscellaneous inspections, as necessary.				
429-MM, Chapter 99	13. Do all inspection tasks for installed BHT kits not included in this inspection, as necessary.				
	14. Record accomplishment of this inspection in the helicopter log book.				
	PREPARATION TASKS				
429-MM, Chapter 06	1. Remove panel 600FL.				
	FIRE PROTECTION				
429-MM, Chapter 26 261002	1. Discard the No.1 and No.2 engine fire detection sensors.	600FL	710		
	COMPLETION TASKS				
429-MM, Chapter 06	1. Install panel 600FL.				

POST OFFICE BOX 482 • FORT WORTH, TEXAS 76101

Intentionally blank page

POST OFFICE BOX 482 • FORT WORTH, TEXAS 76101

Scheduled Inspections - 1600 Flight Cycle Inspection

Procedure

Table 1. ***Scheduled Inspections — 1600-Flight Cycle Inspection***

DATA REFERENCE/IMRR TASK NUMBER	TASK DESCRIPTION	ACCESS	ZONES	INITIAL MECH	INITIAL OTHER
	DATE: _____W.O.				
	FACILITY:				
	HELICOPTER S/N:				
	REGISTRY NO.:				
	TOTAL TIME:				
	SIGNATURE:				
	NOTE *To be performed every 1600 Flight cycles.*				
	GENERAL				
	1. Review helicopter log book and make sure that all recorded discrepancies have been corrected.				
	2. Do all necessary airworthiness directives.				
429-A-04-00-00-00A-009A-A / 00007	*3. Make sure that life limited parts do not exceed service life.*				
429-MM, Chapter 12	*4. Do all necessary lubrication tasks.*				
429-A-05-40-00-22A-281A-A / 00043	*5. Do all miscellaneous inspections, as necessary.*				
429-MM, Chapter 99	*6. Do all inspection tasks for installed BHT kits not included in this inspection, as necessary.*				
	7. Record accomplishment of this inspection in the helicopter log book.				
	PREPARATION TASKS				
429-MM, Chapter 06	*1. Remove panels 200CL, 200CC, and 200CR.*				
	LANDING GEAR				
429-MM, Chapter 32 *327001*	*1. Do a general visual inspection of the forward crosstube assembly.*	*200CL, 200CC, 200CR*	*317*		
429-MM, Chapter 32 *327002*	*2. Do a general visual inspection of the aft crosstube assembly.*	*N/A*	*318*		
429-MM, Chapter 32 *327004*	*3. Do a general visual inspection of the skid tube assemblies.*	*N/A*	*316*		
429-MM, Chapter 32 *327005*	*4. Do a general visual inspection of the forward crosstube attachment clamps.*	*200CL, 200CC, 200CR*	*317*		
429-MM, Chapter 32 *327006*	*5. Do a general visual inspection of the aft pivot assembly.*	*N/A*	*318*		
429-MM, Chapter 32 *327007*	*6. Do a general visual inspection of the aft crosstube attachment clamp.*	*N/A*	*318*		
429-MM, Chapter 32 *327010*	*7. Do a functional check of the aft pivot assembly bushings.*	*N/A*			

POST OFFICE BOX 482 • FORT WORTH, TEXAS 76101

Table 1. ***Scheduled Inspections — 1600-Flight Cycle Inspection*** **(continued)**

DATA REFERENCE/IMRR TASK NUMBER	*TASK DESCRIPTION*	*ACCESS*	*ZONES*	*INITIAL*	
				MECH	*OTHER*
429-MM, Chapter 06	***COMPLETION TASKS*** *1. Install panels 200CL, 200CC, and 200CR.*				

POST OFFICE BOX 482 • FORT WORTH, TEXAS 76101

Scheduled Inspections - 5000 RIN Inspection

Table 1. Scheduled Inspections - 5000 RIN Inspection

DATA REFERENCE/IMRR TASK NUMBER	TASK DESCRIPTION	ACCESS	ZONES	INITIAL MECH	INITIAL OTHER
	DATE: _____W.O.				
	FACILITY:				
	HELICOPTER S/N:				
	REGISTRY NO.:				
	TOTAL TIME:				
	SIGNATURE:				
	NOTE To be performed every 5000 RIN. **GENERAL** 1. Review helicopter log book and ensure all recorded discrepancies have been corrected. 2. Ensure compliance with all applicable airworthiness directives.				
429-A-04-00-00-00A-009A-A / 00007	3. Ensure life limited parts do not exceed service life.				
429-MM, Chapter 12	4. Ensure all required lubrication tasks have been performed.				
429-A-05-40-00-22A-281A-A / 00043	5. Ensure all required miscellaneous inspections have been performed, as applicable.				
429-MM, Chapter 99	6. Ensure all required inspections of installed BHT kits not covered in this inspection have been performed, as applicable. 7. Record accomplishment of this inspection in the helicopter log book. **PREPARATION TASKS** None **SKID LANDING GEAR ASSEMBLY** **NOTE** Retirement index number (RIN) is a Bell method of tracking cycle lifed components, (Bell information letter GEN-03-94).				
429-MM, Chapter 32 327008	1. Do a crosstube deflection check of the skid landing gear assembly. **COMPLETION TASKS** None	N/A	318		

POST OFFICE BOX 482 • FORT WORTH, TEXAS 76101

Intentionally blank page

POST OFFICE BOX 482 • FORT WORTH, TEXAS 76101

Scheduled Inspections - Miscellaneous Inspection

Table 1. Scheduled Inspections - Miscellaneous Inspection

DATA REFERENCE/IMRR TASK NUMBER	TASK DESCRIPTION	ACCESS	ZONES	INITIAL MECH	INITIAL OTHER
	DATE: _____W.O.				
	FACILITY:				
	HELICOPTER S/N:				
	REGISTRY NO.:				
	TOTAL TIME:				
	SIGNATURE:				
	NOTE Refer to the requirements from your government regulatory authority for the applicable interval(s).				
	GENERAL				
	1. Review helicopter log book and make sure that all recorded discrepancies have been corrected.				
	2. Do all necessary airworthiness directives.				
429-A-04-00-00-00A-009A-A / 00007	3. Make sure that life limited parts do not exceed service life.				
429-MM, Chapter 12	4. Do all necessary lubrication tasks.				
	5. Record accomplishment of this inspection in the helicopter log book.				
	PREPARATION TASKS				
429-MM, Chapter 06	1. Remove panel 200AL, 200AR, and 400C.				
	INSTRUMENT SYSTEM				
429-MM, Chapter 95 312001	1. Do a functional check of the standby compass.	200AL, 200AR	212		
	AVIONICS SYSTEM				
429-MM, Chapter 97 BHT-429-CMM-V, Chapter 97 256002	1. Replace the battery of the Emergency Locator Transmitter (ELT) .	400C	411		
	COMPLETION TASKS				
429-MM, Chapter 06	1. Install panel 200AL, 200AR, and 400C.				

POST OFFICE BOX 482 • FORT WORTH, TEXAS 76101

Intentionally blank page

POST OFFICE BOX 482 • FORT WORTH, TEXAS 76101

Special Inspections - General

Special inspections are of a temporary nature (e.g., opportunity inspections, etc.) or occur at special intervals that are not consistent with the scheduled inspections.

- Torque/Friction Check (429-A-05-50-00-00A-283A-A / 00045)
- Opportunity Inspection - Component Removal (429-A-05-50-00-01A-283A-A / 00046)

POST OFFICE BOX 482 • FORT WORTH, TEXAS 76101

Intentionally blank page

POST OFFICE BOX 482 • FORT WORTH, TEXAS 76101

Special Inspections - Torque/Friction Check

Table 1. Special Inspections - Torque/Friction Check

DATA REFERENCE	TASK DESCRIPTION	INI-TIAL	INTERVAL				INITIAL	
		1 TO 3 HOU-RS	1 TO 5 HOU-RS	3 TO 5 HOU-RS	10 TO 25 HO-URS	400 H-OURS	MECH	OTHER
	DATE:							
	W.O.							
	FACILITY:							
	HELICOPTER S/N:							
	REGISTRY NO.:							
	TOTAL TIME:							
	SIGNATURE:							
429-MM, Chapter 53	Do a torque check of the tailboom attachment to the aft fuselage.		X (1)			X (2)		
429-MM, Chapter 62	Do a torque check of the main rotor mast nut.	X (4)	X (5)					
429-MM, Chapter 62	Do a torque check of the through bolts of the main rotor hub assembly.	X (4)	X (5)					
429-MM, Chapter 62	Do a torque check of the lower cone assembly of the main rotor hub assembly.	X (4)	X (5)					
429-MM, Chapter 62	*Do a torque check of the two nuts that attach the shear bearing to the lead/lag damper.*					X (2)		
429-MM, Chapter 62	Do a tilt friction check of the swashplate and support assembly.				X (3)			
429-MM, Chapter 64	Do a torque check of the tail rotor mast nut.		X (1)					
429-MM, Chapter 65	Do a torque check of the tail rotor gearbox attachment to the tail rotor gearbox support.				X (1)			

NOTES:

1 Do the torque check at the specified interval after installation of the component and repeat the check at the same interval until the torque is stabilized.

2 Do the torque check at the specified interval of component operating time.

3 Do the tilt friction check at the specified interval of component operating time after installation of the swashplate and support assembly or adjustment of the tilt friction, as necessary.

4 Do an initial torque check as specified after installation of the component.

5 Do the torque check of the component at the specified interval until the torque is stabilized.

POST OFFICE BOX 482 • FORT WORTH, TEXAS 76101

Intentionally blank page

POST OFFICE BOX 482 • FORT WORTH, TEXAS 76101

Special Inspections - Opportunity Inspections - Component Removal

Table 1. Special Inspections - Opportunity Inspections - Component Removal

DATA REFERENCE/IMRR TASK NUMBER	TASK DESCRIPTION	ACCESS	ZONES	INITIAL MECH	INITIAL OTHER
	DATE: _____W.O.				
	FACILITY:				
	HELICOPTER S/N:				
	REGISTRY NO.:				
	TOTAL TIME:				
	SIGNATURE:				
	NOTE To be performed every time the component is removed from the helicopter.				
	GENERAL				
	1. Review helicopter log book and make sure that all recorded discrepancies have been corrected.				
	2. Do all necessary airworthiness directives.				
429-A-04-00-00-00A-009A-A / 00007	3. Make sure that life limited parts do not exceed service life.				
429-MM, Chapter 12	4. Do all necessary lubrication tasks.				
429-A-05-40-00-22A-281A-A / 00043	5. Do all miscellaneous inspections, as necessary.				
429-MM, Chapter 99	6. Do all inspection tasks for installed BHT kits not included in this inspection, as necessary.				
	7. Record accomplishment of this inspection in the helicopter log book.				
	PREPARATION TASKS				
429-MM, Chapter 06	1. Remove panels 600ER, 600EL, 600FL, 600FR, and 700GR.				
	FUEL SYSTEM				
429-MM, Chapter 28 283001	1. Do a detailed inspection of the inlet screen if the mid-forward sump plate or mid-aft sump plate is removed.	300G, 300H	311		
	MAIN ROTOR				
429-MM, Chapter 62 622002	1. Do a detailed inspection of the lower cone and upper cone set assembly if the main rotor hub assembly is removed.	N/A	611		
	TAIL ROTOR				
429-MM, Chapter 64 642002	1. Do a detailed inspection of the cone set assembly if the tail rotor hub assemblies are removed.	N/A	510		
	TAIL ROTOR DRIVE SYSTEM				
429-MM, Chapter 65 651005	1. Do a detailed inspection of the forward driveshaft assembly if the fan shaft assembly or the transmission assembly is removed.	600ER, 600EL, 600FL, 600FR, 700GR	710		

POST OFFICE BOX 482 • FORT WORTH, TEXAS 76101

Table 1. Special Inspections - Opportunity Inspections - Component Removal (continued)

DATA REFERENCE/IMRR TASK NUMBER	TASK DESCRIPTION	ACCESS	ZONES	INITIAL	
				MECH	OTHER
429-MM, Chapter 06	**COMPLETION TASKS** 1. Install panels 600ER, 600EL, 600FL, 600FR, and 700GR.				

POST OFFICE BOX 482 • FORT WORTH, TEXAS 76101

Conditional Inspections - General

A conditional inspection does not occur at a specified time. It is conducted based on the result of known or suspected unusual events, known or suspected malfunctions, or defects.

Evaluate the components that you remove from the helicopter as a result of a conditional inspection as an interrelated group. The removal records that go with each component must cross-reference the part and serial numbers of the other components that you removed for evaluation.

NOTE

The PW207D1/D2 Maintenance Manual (P/N 3071602) includes all of the instructions for continued airworthiness for the PW207D1/D2 engines, as installed in the Model 429 helicopter and operated in accordance with the limitations contained in the Flight Manual (BHT-429-FM-1, Section 1).

Refer to the PW207D1/D2 Maintenance Manual (P/N 3071602) for the unscheduled maintenance checks of the engines.

Events that require a conditional inspection include (but are not limited to) the following:

- Hard landing (429-A-05-50-00-00A-284A-A / 00048)
- Sudden stoppage (main rotor) power ON or OFF (429-A-05-50-00-01A-284A-A / 00049)
- Sudden stoppage (tail rotor) power ON or OFF (429-A-05-50-00-02A-284A-A / 00050)
- Main rotor overspeed (429-A-05-50-00-03A-284A-A / 00051)
- Overtorque (429-A-05-50-00-04A-284A-A / 00052)
- One Engine Inoperative (OEI) (429-A-05-50-00-05A-284A-A / 00053
- One Engine Inoperative (OEI) limit override (429-A-05-50-00-06A-284A-A / 00054)
- Compressor stall or surge (429-A-05-50-00-07A-284A-A / 00055)
- Lightning strike (429-A-05-50-00-08A-284A-A / 00056)
- Water immersion (429-A-05-50-00-09A-284B-A / 00057)
- Flight through hail (429-A-05-50-00-10A-284A-A / 00058)
- Tail rotor blade handling damage (429-A-05-50-00-11A-284A-A / 00059)

POST OFFICE BOX 482 • FORT WORTH, TEXAS 76101

Intentionally blank page

POST OFFICE BOX 482 • FORT WORTH, TEXAS 76101

Conditional Inspections - Hard Landing

Table 1. Conditional Inspections - Hard Landing

DATA REFERENCE	INSPECTION TASK DESCRIPTION	INITIAL MECH	INITIAL OTHER
	DATE:		
	W.O.		
	FACILITY:		
	HELICOPTER S/N:		
	REGISTRY NO.:		
	TOTAL TIME:		
	SIGNATURE:		
	NOTE If the information contained in the following conditional inspection does not fully reflect the occurrence or if additional information or clarification is necessary, please contact Product Support Engineering for assistance. A hard landing is an accident or incident in which the impact of the helicopter with the ground causes severe pitching of the main rotor or results in noticeable yielding or cracking of the fuselage pylon support structure or the landing gear. Conditions at touchdown that could cause a hard landing are as follows: - A high rate of descent - A high sideward speed - A high roll angle together with normal descent speeds - A high yaw angle together with normal forward landing speed - A landing with forward airspeed on soft or unprepared ground If a hard landing is reported and/or suspected, do an initial inspection of the helicopter as follows:		
429-MM, Chapter 64	**TAIL ROTOR** 1. Visually examine both tail rotor hub and blade assemblies for damage. If any damage is found, do a sudden stoppage (tail rotor) power ON or OFF inspection (429-A-05-50-00-02A-284A-A / 00050). 2. If no damage is found, the tail rotor hub and blade assemblies are serviceable.		
429-MM, Chapter 53	**FUSELAGE AND TAILBOOM** 1. Visually examine the belly panels and mating areas on the sidebody panels, the aft fuselage fairing (400A), and the lower skin of the tailboom assembly for damage.		
429-MM, Chapter 25	**EQUIPMENT AND FURNISHING** 1. Do a visual check of the energy attenuation device on the pilot and copilot seats for correct indication as follows: a. Visually examine the position of the yellow reference mark on the seat energy absorber. b. If the reference mark is outside the corresponding stroke indicator notch, replace the necessary seat. 2. Do a visual check of the energy attenuation device on the passenger seats for correct indication as follows: a. Look at the seat structure assembly below the leg to see the stroke indicator marks. b. If the green dot is visible, the seat is serviceable.		

POST OFFICE BOX 482 • FORT WORTH, TEXAS 76101

Table 1. Conditional Inspections - Hard Landing (continued)

DATA REFERENCE	INSPECTION TASK DESCRIPTION	INITIAL MECH	INITIAL OTHER
	c. If only the red dot is visible, replace the applicable seat.		
429-MM, Chapter 32	**LANDING GEAR**		
	1. Examine the landing gear for condition and security of attachment.		
	2. Do a crosstube deflection check.		
	3. Examine the skid tube assemblies, forward and aft crosstube assemblies, retaining straps, and passenger step assemblies for condition and security of attachment and replace the applicable component(s) as necessary.		
	4. Examine the forward clamp assemblies, aft pivot assembly, and surrounding structure for condition and security of attachment.		
	5. If no damage is found on the forward clamp assemblies, aft pivot assembly, and surrounding structure, replace the damaged components of the landing gear as necessary.		
429-MM, Chapter 62	**MAIN ROTOR**		
	1. Do a visual inspection of the main rotor blades as follows:		
	a. Clean the main rotor blades.		
	b. Visually examine the upper and lower skins and the leading edge abrasion strip and tip cap of each main rotor blade for damage.		
	c. If one or more main rotor blades is damaged, do the following:		
	(1) Remove all the main rotor blades.		
	(2) Attach a THIS COMPONENT WAS REMOVED FROM SERVICE BECAUSE OF A HARD LANDING tag on each main rotor blade.		
	(3) Send all the main rotor blades to an approved facility for further inspection and repair.		
	2. Do a visual inspection of the main rotor hub assembly as follows:		
	NOTE Yielding or deformation of the lower mount assembly on the main rotor hub assembly may occur under certain conditions prior to crosstube deformation or bending.		
	a. Visually examine the upper and lower mount assemblies of the main rotor hub assembly for hard contact, yielding, and deformation. If the lower mount assembly shows signs of damage, but no other main rotor hub or main rotor blade damage is found, replace the damaged components.		
	b. If the lower mount assembly shows signs of damage, but no other main rotor hub or main rotor blade damage is found, replace the damaged component.		
	c. If the upper mount assembly shows signs of damage and damage is within limits, repair the upper mount assembly. If damage exceeds limits, replace the upper mount assembly.		
	d. Visually examine the main rotor hub assembly for damage. If the main rotor hub assembly shows signs of damage, do the following:		
	(1) Remove the main rotor hub assembly.		
	(2) Attach a THIS COMPONENT WAS REMOVED FROM SERVICE BECAUSE OF A HARD LANDING tag on the main rotor hub assembly.		
	(3) Disassemble, clean, and do a detailed inspection of the main rotor hub assembly.		
429-MM, Chapter 63	**MAIN ROTOR DRIVE SYSTEM**		

Table 1. Conditional Inspections - Hard Landing (continued)

DATA REFERENCE	INSPECTION TASK DESCRIPTION	INITIAL MECH	INITIAL OTHER
	1. Do an inspection of the mast assembly as follows:		
	a. Examine the mast assembly for signs of distortion.		
	b. If any distortion is found, discard the mast assembly.		
	c. If no distortion is found, do the following:		
	(1) Remove the mast assembly.		
	(2) Attach a THIS COMPONENT WAS REMOVED FROM SERVICE BECAUSE OF A HARD LANDING tag on the mast assembly.		
	(3) Send the mast assembly to an approved repair facility to do a detailed inspection of the mast assembly, including a check of the mast straightness and Total Indicated Runout (TIR) .		
BHT-429-FM-1, Section 2	2. Do a preflight check and if no other damage is found, return the helicopter to service.		
	If damage was found other than a bent landing gear crosstube assembly or a yielded or deformed lower mount assembly, do the following detailed inspections:		
429-MM, Chapter 53	**FUSELAGE**		
	1. Do a symmetry check of the fuselage and tailboom.		
	2. If damage is found indicating a possible misalignment of the fuselage, do the following:		
	a. Contact Product Support Engineering for information concerning the possible repair procedures and approved repair facilities, and the associated equipment necessary to confirm the structural alignment.		
	b. Remove the following components:		
429-MM, Chapter 63	• Transmission assembly.		
429-MM, Chapter 63	• Mast assembly.		
429-MM, Chapter 63	• Engine-to-transmission driveshafts.		
	c. Attach a THIS COMPONENT WAS REMOVED FROM SERVICE BECAUSE OF A HARD LANDING tag on each component.		
429-MM, Chapter 63	d. Send the transmission assembly to an approved repair facility to disassemble, clean, and do a detailed inspection.		
	e. Disassemble, clean, and do a detailed inspection of the mast assembly.		
429-MM, Chapter 63	f. Clean and do a detailed inspection of each engine-to-transmission driveshaft.		
429-MM, Chapter 65	g. Remove and examine all the components of the tail rotor driveshaft assembly for condition.		
	3. If damage is found indicating a possible misalignment of the tailboom, do the following:		
	a. Contact Product Support Engineering for information concerning the possible repair procedures and approved repair facilities, and the associated equipment required to confirm the structural alignment.		
	b. Remove the tail rotor gearbox.		
	c. Attach a THIS COMPONENT WAS REMOVED FROM SERVICE BECAUSE OF A HARD LANDING tag on the tail rotor gearbox.		
	d. Send the tail rotor gearbox to an approved repair facility to disassemble, clean, and do a detailed inspection.		
429-MM, Chapter 65	e. Remove and examine all the components of the tail rotor driveshaft assembly for condition.		

POST OFFICE BOX 482 • FORT WORTH, TEXAS 76101

Table 1. Conditional Inspections - Hard Landing (continued)

DATA REFERENCE	INSPECTION TASK DESCRIPTION	INITIAL MECH	INITIAL OTHER
	NOTE Damage or distortion of the tail skid and tail skid mounting points on the vertical fin is not cause to send the tailboom for repair.		
429-MM, Chapter 32	4. Visually examine the tail skid and tail skid mounting points. Repair or replace the damaged parts, as necessary.		
429-MM, Chapter 63 429-MM, Chapter 65	**MAIN ROTOR AND TAIL ROTOR DRIVE SYSTEMS**		
	1. Visually examine the main rotor and tail rotor drive systems for any of the following conditions:		
	• Damage to the engine-to-transmission driveshafts, transmission assembly, tail rotor driveshafts, or tail rotor gearbox caused by the hard landing		
	• Collected metal on any chip detector of the transmission assembly or tail rotor gearbox.		
	• Damage to the structure around the transmission mounting points (vertical Liquid Inertial Vibration Eliminator (LIVE) mounts and pitch restraint spring assemblies); examine for cracks, deformation, or movement of the transmission pylon assemblies with a 10x magnifying glass		
	• Damage to the cabin roof beams where the transmission pylon assemblies attach.		
	2. If any of the above conditions are noted, do the following:		
	a. Remove the damaged component(s).		
	b. Attach a THIS COMPONENT WAS REMOVED FROM SERVICE BECAUSE OF A HARD LANDING tag on the component(s).		
	c. Disassemble the component(s), if necessary, then clean and do a detailed inspection of the component(s), or send the component(s) to an approved repair facility for restoration.		
429-MM, Chapter 63 429-MM, Chapter 65	3. Visually examine the components that follow for loss of torque of attaching hardware:		
	• Transmission		
	• Engine-to-transmission driveshafts		
	• Tail rotor gearbox		
	• Tail rotor driveshafts		
	• Vertical LIVE mounts		
	• Pitch restraint spring assemblies		
	4. Visually examine the vertical LIVE mounts for condition.		
	5. Visually examine the pitch restraint spring assemblies for condition.		
	6. Visually examine the fitting assemblies for condition.		
	7. Visually examine the adapter assemblies for condition.		
	8. Visually examine the stop pins for condition.		
	9. Do an inspection of the mast assembly as follows:		
	a. Examine the mast assembly for signs of distortion.		
	b. If any distortion is found, discard the mast assembly.		
	c. If no distortion is found, do the following:		

Table 1. Conditional Inspections - Hard Landing (continued)

DATA REFERENCE	INSPECTION TASK DESCRIPTION	INITIAL MECH	INITIAL OTHER
	(1) Remove the mast assembly.		
	(2) Attach a THIS COMPONENT WAS REMOVED FROM SERVICE BECAUSE OF A HARD LANDING tag on the mast assembly.		
429-MM, Chapter 63	(3) Send the mast assembly to an approved repair facility to do a detailed inspection of the mast assembly, including a check of the mast straightness and (TIR) Total Indicated Runout.		
	10. Visually examine the transmission oil system for condition and leakage.		
429-MM, Chapter 71	**POWER PLANT**		
PW207D1/D2 MM (P/N 3071602)	1. Do an engine hard landing inspection.		
429-MM, Chapter 71	2. Visually examine all air and fluid flexible and rigid lines in the engine compartment for leakage, condition, and security.		
429-MM, Chapter 62	**FLIGHT CONTROLS**		
429-MM, Chapter 67			
	1. Visually examine all of the main rotor and tail rotor controls for condition and discard any damaged part.		
	2. If damage in the rotating controls is found, do the following:		
	a. Remove the main rotor pitch link assemblies.		
	b. Remove the main rotor hub assembly.		
	c. Remove the swashplate and support assembly.		
	d. Attach a THIS COMPONENT WAS REMOVED FROM SERVICE BECAUSE OF A HARD LANDING tag on each component.		
429-MM, Chapter 62	e. Disassemble, clean, and do a detailed inspection of the pitch link assemblies.		
	f. Disassemble, clean, and do a detailed inspection of the main rotor hub assembly.		
	g. Disassemble, clean, and do a detailed inspection of the swashplate and support assembly.		
429-MM, Chapter 29	**HYDRAULIC SYSTEM**		
	1. Do a visual inspection of the hydraulic system as follows, and repair or replace any damaged part(s) as necessary:		
	a. Visually examine the hydraulic system for leakage and condition.		
	b. Visually examine the servo actuator supports and the surrounding roof structure for condition.		
	c. Visually examine all of the fluid flexible and rigid lines for leakage, condition, and security.		
	2. Do an operational check of the hydraulic system.		
429-MM, Chapter 28	**FUEL SYSTEM**		
	1. Do a visual inspection of the fuel system as follows, and repair or replace any damaged part(s) as necessary:		
	a. Visually examine the fuel system for leakage and condition.		
	b. Visually examine the sump plate retainers for condition.		
	c. Visually examine the fuel quantity probes for security of attachment.		
	d. Visually examine the belly panels for condition and security of attachment.		

POST OFFICE BOX 482 • FORT WORTH, TEXAS 76101

Table 1. Conditional Inspections - Hard Landing (continued)

DATA REFERENCE	INSPECTION TASK DESCRIPTION	INITIAL MECH	INITIAL OTHER
BHT-429-FM-1, Section 2	e. Visually examine the sump plates and surrounding area for leakage. f. Examine the electrical harnesses for condition and security of attachment. g. Examine all of the fluid flexible and rigid lines for leakage, condition, and security. 2. Do an operational check of the fuel system. **COMPLETION TASKS** 1. If any damage is found during the inspection, make sure all of the necessary repairs are made and all of the systems are operational. **CAUTION** **A QUALIFIED PERSON MUST BE AT THE HELICOPTER CONTROLS DURING THE FOLLOWING PROCEDURE.** 2. Start the engines and do a one-hour ground run (100% rotor RPM (N_R)). 3. Visually examine the transmission and engine oil systems, hydraulic system, and fuel system for leakage.		

POST OFFICE BOX 482 • FORT WORTH, TEXAS 76101

Conditional Inspections - Sudden Stoppage (Main Rotor) Power ON or OFF

Table 1. Conditional Inspections - Sudden Stoppage (Main Rotor) Power ON or OFF

DATA REFERENCE	INSPECTION TASK DESCRIPTION	INITIAL	
		MECH	OTHER
	DATE:		
	W.O.		
	FACILITY:		
	HELICOPTER S/N:		
	REGISTRY NO.:		
	TOTAL TIME:		
	SIGNATURE:		
	NOTE If the information contained in the following conditional inspection does not fully reflect the occurrence or if additional information or clarification is necessary, please contact Product Support Engineering for assistance. Sudden stoppage is any rapid deceleration of the rotor drive system. This may be caused by seizure of the transmission assembly or by contact of the main rotor blades with the ground, water, snow, dense vegetation, or other object of sufficient mass. There is a sudden stoppage when: • A main rotor blade strikes some object with a force sufficient to require a blade to be discarded. • Impact damage to the leading edge or lower skin exceeds the limits specified in 429-MM, Chapter 62. • The mast is twisted, bowed, or out of roundness to an extent that exceeds the limits specified in the 429-MM, Chapter 63. If a sudden stoppage of the main rotor results in severe damage or distortion to the main rotor blades, hub, or mast, do a detailed inspection of the tail rotor drive system. If any damage is found, do a sudden stoppage (tail rotor) power ON or OFF inspection (429-A-05-50-00-02A-284A-A / 00050). If a sudden stoppage has occurred, do the following inspections:		
429-MM, Chapter 62 429-MM, Chapter 18	**MAIN ROTOR** 1. Visually examine the product balance weight pocket of each main rotor blade for any of the following: a. Retainers, weights, and wedge should be snug. Examine for gap as shown in Figure 1. A gap greater than 0.040 inch (1.02 mm) is not acceptable. b. Remove retainers and weights and make sure that there is no binding of the retainers and weights. c. Visually examine the retainers and weights for any visible damage. d. If blade exhibits any of these conditions, send the blade to an approved facility for further inspection and repair. e. Remove all of the remaining blades. f. Attach a THIS COMPONENT WAS REMOVED FROM SERVICE BECAUSE OF A SUDDEN STOPPAGE tag on each remaining blade. g. Send all of the remaining blades to an approved facility for further inspection and repair. 2. Do a visual inspection of the main rotor blades as follows:		

POST OFFICE BOX 482 • FORT WORTH, TEXAS 76101

Table 1. Conditional Inspections - Sudden Stoppage (Main Rotor) Power ON or OFF (continued)

DATA REFERENCE	INSPECTION TASK DESCRIPTION	INITIAL	
		MECH	OTHER
429-MM, Chapter 62	a. Clean the main rotor blades. b. Visually examine the upper and lower skins and the leading edge abrasion strip and tip cap of each main rotor blade for wrinkled skin, deformation, and cracks. If delamination is suspected, examine the blades for voids. c. If one or more main rotor blades is damaged, do the following: (1) Remove all of the main rotor blades and the main rotor hub assembly. (2) Attach a THIS COMPONENT WAS REMOVED FROM SERVICE BECAUSE OF A SUDDEN STOPPAGE tag on each main rotor blade and on the main rotor hub assembly. (3) Send all the main rotor blades to an approved facility for further inspection and repair. (4) Disassemble, clean, and do a detailed inspection of the main rotor hub assembly. d. If no damage is found on any main rotor blade, the main rotor blades are serviceable. 3. Do a visual inspection of the main rotor hub assembly as follows: a. Visually examine the main rotor hub assembly for condition. b. If the main rotor hub assembly is damaged, do the following: (1) Remove the main rotor hub assembly. (2) Attach a THIS COMPONENT WAS REMOVED FROM SERVICE BECAUSE OF A SUDDEN STOPPAGE tag on the main rotor hub assembly. (3) Disassemble, clean, and do a detailed inspection of the main rotor hub assembly. c. If no damage is found on the main rotor hub assembly, the main rotor hub assembly is serviceable.		
429-MM, Chapter 62	4. Do a visual inspection of the rotating controls as follows: a. Visually examine the pitch link assemblies for condition. If replacement of a bent or broken pitch link is necessary, do the following: (1) Remove and discard all the control bolts from the hydraulic servo actuators to the grip assemblies. (2) Remove the swashplate and support assembly. (3) Attach a THIS COMPONENT WAS REMOVED FROM SERVICE BECAUSE OF A SUDDEN STOPPAGE tag on the swashplate and support assembly. (4) Remove, clean, and do a detailed inspection of the swashplate and support assembly. b. Visually examine the pitch horn of the grip assemblies for condition. If replacement of a grip assembly is necessary because of a broken pitch horn, do the following: (1) Remove and discard all the control bolts from the hydraulic servo actuators to the grip assemblies. (2) Remove the swashplate and support assembly. (3) Attach a THIS COMPONENT WAS REMOVED FROM SERVICE BECAUSE OF A SUDDEN STOPPAGE tag on the swashplate and support assembly. (4) Disassemble, clean, and do a detailed inspection of the swashplate and support assembly.		

Table 1. Conditional Inspections - Sudden Stoppage (Main Rotor) Power ON or OFF (continued)

DATA REFERENCE	INSPECTION TASK DESCRIPTION	INITIAL	
		MECH	OTHER
	c. Visually examine the swashplate and support assembly for condition. If the sudden stoppage caused damage, do the following: (1) Remove and discard all the control bolts from the hydraulic servo actuators to the grip assemblies. (2) Remove the swashplate and support assembly. (3) Attach a THIS COMPONENT WAS REMOVED FROM SERVICE BECAUSE OF A SUDDEN STOPPAGE tag on the swashplate and support assembly. (4) Disassemble, clean, and do a detailed inspection of the swashplate and support assembly. d. If none of the above damage is found, the swashplate and support assembly is serviceable.		
429-MM, Chapter 63	**MAIN ROTOR DRIVE SYSTEM** 1. Do a detailed inspection of the mast assembly as follows: **NOTE** If the mast assembly was broken in two during a sudden stoppage (main rotor) power ON, the mast assembly has sustained torsional yielding.		
429-MM, Chapter 63	a. Send the mast assembly to an approved repair facility to do a check of the Total Indicated Runout (TIR) to examine the mast assembly for torsional yielding. **NOTE** Refer to General Information Letter (IL) GEN-04-98 for the applicable shipping information and to obtain a Return Material Authorization (RMA) number. b. If the mast assembly is outside the TIR limits, send the mast assembly to Bell for confirmation of the torsional yielding. Upon confirmation, do the following: (1) Discard the mast assembly. (2) Discard the engine-to-transmission driveshafts. (3) Remove the transmission assembly, vertical Liquid Inertial Vibration Eliminator (LIVE) mounts, and pitch restraint spring assemblies. (4) Attach a THIS COMPONENT WAS REMOVED FROM SERVICE BECAUSE OF A SUDDEN STOPPAGE tag on the transmission assembly, vertical LIVE mounts, and pitch restraint spring assemblies.		
429-MM, Chapter 63	(5) Send the transmission assembly to an approved repair facility to disassemble, clean, and do a detailed inspection. (6) Clean and do a detailed inspection of the vertical LIVE mounts. (7) Clean and do a detailed inspection of the pitch restraint spring assemblies. c. If there is damage to the mast assembly other than torsional yielding, do the following: (1) Discard the mast assembly. (2) Remove the transmission assembly. (3) Attach a THIS COMPONENT WAS REMOVED FROM SERVICE BECAUSE OF A SUDDEN STOPPAGE tag on the transmission assembly.		

POST OFFICE BOX 482 • FORT WORTH, TEXAS 76101

Table 1. Conditional Inspections - Sudden Stoppage (Main Rotor) Power ON or OFF (continued)

DATA REFERENCE	INSPECTION TASK DESCRIPTION	INITIAL	
		MECH	OTHER
	(4) Send the transmission to an approved repair facility to disassemble, clean, and do a detailed inspection of the transmission assembly, including NDT inspection of the main and top case members of the case set assembly.		
	d. If the mast shows no sign of torsional yielding and if the transmission assembly shows no signs of damage, do the following:		
	(1) Remove the mast assembly and the transmission assembly.		
	(2) Attach a THIS COMPONENT WAS REMOVED FROM SERVICE BECAUSE OF A SUDDEN STOPPAGE tag on the mast assembly and on the transmission assembly.		
429-MM, Chapter 63	(3) Disassemble, clean, and do a detailed inspection of the mast assembly.		
429-MM, Chapter 63	(4) Send the transmission assembly to an approved repair facility to disassemble, clean, and do a detailed inspection.		
	2. For helicopters 57001 through 57066, visually examine the attachment points of the fitting assemblies on the adapter assemblies for condition. If the adapter assemblies are damaged in these areas, do the following:		
	a. Discard the adapter assemblies.		
	b. Remove the mast assembly and the transmission assembly.		
	c. Attach a THIS COMPONENT WAS REMOVED FROM SERVICE BECAUSE OF A SUDDEN STOPPAGE tag on the mast assembly and on the transmission assembly.		
429-MM, Chapter 63	d. Disassemble, clean, and do a detailed inspection of the mast assembly.		
429-MM, Chapter 63	e. Send the transmission assembly to an approved repair facility to disassemble, clean, and do a detailed inspection.		
	3. For helicopters 57067 and subsequent, visually examine the attachment points of the fitting assemblies on the transmission assembly for condition. If the transmission assembly is damaged in this area, do the following:		
	a. Remove the mast assembly and the transmission assembly.		
	b. Attach a THIS COMPONENT WAS REMOVED FROM SERVICE BECAUSE OF A SUDDEN STOPPAGE tag on the mast assembly and on the transmission assembly.		
429-MM, Chapter 63	c. Disassemble, clean, and do a detailed inspection of the mast assembly.		
429-MM, Chapter 63	d. Send the transmission assembly to an approved repair facility to disassemble, clean, and do a detailed inspection.		
	4. Visually examine the pylon beam assemblies, vertical LIVE mounts, and pitch restraint spring assemblies for condition and replace the part(s) as necessary.		
	5. Visually examine the fitting assemblies and the stop pins for condition and replace the part(s) as necessary.		
	6. Visually examine the attachment points of the pylon beam assemblies and stop pins on the cabin roof beams for condition. If the roof beam structure to cabin roof is damaged at the attachment point location, contact Product Support Engineering for information concerning the possible repair procedures and approved repair facilities, and the associated equipment necessary to confirm the structural alignment.		
	7. Discard the engine-to-transmission driveshafts.		
429-MM, Chapter 65	**TAIL ROTOR DRIVE SYSTEM**		

POST OFFICE BOX 482 • FORT WORTH, TEXAS 76101

Table 1. Conditional Inspections - Sudden Stoppage (Main Rotor) Power ON or OFF (continued)

DATA REFERENCE	INSPECTION TASK DESCRIPTION	INITIAL	
		MECH	OTHER
	1. Visually examine the tail rotor driveshafts for condition. 2. If the tail rotor driveshafts show signs of torsional yielding, do a sudden stoppage (tail rotor) power ON or OFF inspection (429-A-05-50-00-02A-284A-A / 00050).		
429-MM, Chapter 71 PW207D1/D2 MM (P/N 3071602)	**POWER PLANT** 1. Visually examine the attachment points of the engine mounts at the fuselage for cracks. 2. Do an engine sudden stoppage inspection.		

POST OFFICE BOX 482 • FORT WORTH, TEXAS 76101

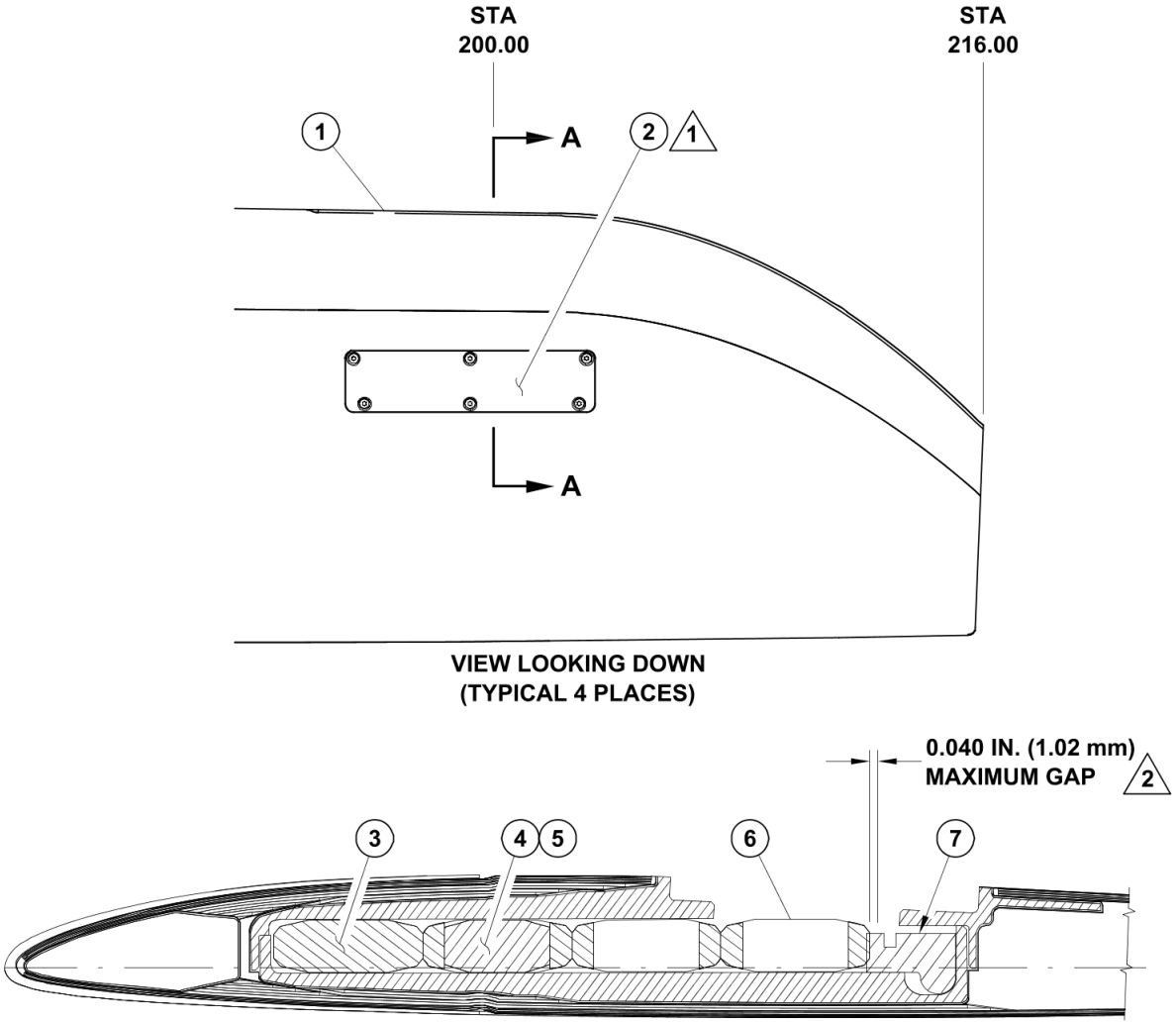

1. Main rotor blade assembly
2. Product balance weight pocket
3. Weight
4. Weight
5. Weight
6. Retainer
7. Wedge

NOTES

1. Refer to Chapter 18 for removal and installation of the product balance weight pocket cover.

2. Examine for gap between wedge (7) and retainer (6), as shown. Due to product balance positioning requirements, weight (3) may also be positioned adjacent to wedge (7).

ICN-429-A-055000-B-97499-00001-A-001-01

Figure 1. Product Balance Weight Pocket - Conditional Inspections (Sheet 1 of 1)

POST OFFICE BOX 482 • FORT WORTH, TEXAS 76101

Conditional Inspections - Sudden Stoppage (Tail Rotor) Power ON or OFF

Table 1. Conditional Inspections - Sudden Stoppage (Tail Rotor) Power ON or OFF

DATA REFERENCE	INSPECTION TASK DESCRIPTION	INITIAL	
		MECH	OTHER
	DATE:		
	W.O.		
	FACILITY:		
	HELICOPTER S/N:		
	REGISTRY NO.:		
	TOTAL TIME:		
	SIGNATURE:		
	NOTE If the information contained in the following conditional inspection does not fully reflect the occurrence or if additional information or clarification is necessary, contact Product Support Engineering for assistance. Sudden stoppage is any rapid deceleration of the rotor drive system. This may be caused by the seizure of the tail rotor drive system or by contact of the tail rotor blades with the ground, water, snow, dense vegetation, or other objects of sufficient mass. There is a sudden stoppage when: • A tail rotor blade strikes some object with a force sufficient to require a blade to be discarded. • Impact damage to the leading edge or skin exceeds the limits specified in 429-MM, Chapter 64. • There is any deformation of any coupling disc packs that results in a gap between the laminates that is more than 0.015 inch (0.381 mm). • Bolt(s) on the coupling disc pack are distorted or cracked. • The tail rotor driveshaft(s) are twisted out of round or bowed to an extent that exceeds the limits specified in 429-MM, Chapter 65. • The tail rotor driveshaft adapter(s) are distorted beyond the limits specified in 429-MM, Chapter 65. If a sudden stoppage has occurred, do the following inspections:		
429-MM, Chapter 65	**TAIL ROTOR DRIVE SYSTEM** SN: 57001-57080: 1. Do an inspection of the forward driveshaft assembly and grease coupling assemblies as follows: a. Disassemble and clean the forward and aft grease coupling assemblies. b. Visually examine the male and female coupling gear teeth of the forward and aft grease coupling assemblies for condition. c. If the male or female coupling gear teeth of the forward and aft grease coupling assemblies fail the visual inspection, do the following: (1) Clean and do a detailed inspection of the remaining parts of the forward and aft grease coupling assemblies. (2) Clean and do a detailed inspection of the forward driveshaft assembly. (3) Replace with serviceable parts.		

POST OFFICE BOX 482 • FORT WORTH, TEXAS 76101

Table 1. Conditional Inspections - Sudden Stoppage (Tail Rotor) Power ON or OFF (continued)

DATA REFERENCE	INSPECTION TASK DESCRIPTION	INITIAL	
		MECH	OTHER
	d. If the visual inspection shows no signs of damage, the forward driveshaft assembly and grease coupling assemblies are serviceable. SN: 57081-Subsequent: 2. Do an inspection of the forward driveshaft assembly, grease coupling assembly, and diaphragm coupling assembly as follows: a. Disassemble and clean the forward grease coupling assembly. b. Visually examine the male and female coupling gear teeth of the forward grease coupling assembly for condition. c. If the male or female coupling gear teeth of the forward grease coupling assembly fail the visual inspection, do the following: (1) Clean and do a detailed inspection of the remaining parts of the forward grease coupling assembly. (2) Clean and do a detailed inspection of the forward driveshaft assembly. (3) Replace with serviceable parts. d. Visually examine the aft diaphragm coupling assembly for signs of damage. e. If the visual inspection shows no signs of damage, the forward driveshaft assembly, grease coupling assembly, and diaphragm coupling assembly are serviceable. 3. Do an inspection of the blowers installed on the fan shaft assembly as follows: a. Disassemble and clean the fan shaft assembly. b. Visually examine the forward and aft impellers for condition. c. If the forward or aft impeller has damage such as cracks or deformation, do the following: (1) Discard the forward and aft impellers. (2) Discard the shaft assembly. (3) Discard the forward and aft splined adapters. (4) Discard the forward and aft sealed bearings. (5) Discard the coupling disc pack mounted on the aft end of the fan shaft assembly. (6) Clean and do a detailed inspection of the forward and aft bearing hangers and support bracket. d. Visually examine the forward and aft blower housings for condition. e. If the visual inspection shows no signs of damage, the blowers are serviceable. 4. Do an inspection of the fan shaft assembly and segmented shaft assemblies as follows: a. Clean and examine the metallic shaft of the fan shaft assembly for bowing or buckling of the tube, loose rivets, and cracked paint at the tube/end fitting interfaces.		

Table 1. Conditional Inspections - Sudden Stoppage (Tail Rotor) Power ON or OFF (continued)

DATA REFERENCE	INSPECTION TASK DESCRIPTION	INITIAL	
		MECH	OTHER
	b. Clean and examine the forward and aft composite segmented shaft assemblies for cracks, voids, delamination, and loose permanent fasteners.		
	c. If any of the above driveshafts were damaged by a main rotor blade strike where the blade has contacted the tailboom or has damage other than torsional overload, do the following:		
	(1) Discard the damaged driveshaft.		
	(2) Discard the driveshaft forward and/or aft of the damaged driveshaft, as applicable.		
	(3) Discard the adjacent bearing(s) and hanger(s), as applicable.		
	(4) Discard the adjacent coupling disc pack(s), as applicable, and disc pack attaching hardware.		
	(5) Remove the remaining components between the transmission and the tail rotor gearbox.		
	(6) Attach a THIS COMPONENT WAS REMOVED FROM SERVICE BECAUSE OF A SUDDEN STOPPAGE tag on each of these components.		
	(7) Clean and do a detailed inspection of each of these components.		
	d. If any of the above driveshafts were damaged because of torsional overload, do the following:		
	(1) Discard the damaged driveshaft.		
	(2) Discard the adjacent bearing(s) and hanger(s), as necessary.		
	(3) Discard all the coupling disc packs and disc pack attaching hardware.		
	(4) Remove the remaining components between the transmission and the tail rotor gearbox.		
	(5) Attach a THIS COMPONENT WAS REMOVED FROM SERVICE BECAUSE OF A SUDDEN STOPPAGE tag on each of these components.		
	(6) Clean and do a detailed inspection of each of these components.		
	e. If the inspection shows no signs of damage, the fan shaft assembly and the segmented shaft assemblies are serviceable.		
	5. Do a detailed inspection of the tail rotor gearbox as follows:		
	a. Examine the tail rotor gearbox for condition. Discard the tail rotor gearbox if any of the following damage is found:		
	b. If there is evidence of a cracked or distorted housing, fractured studs or dowel pins, or bent or damaged output shaft, discard the tail rotor gearbox.		
	c. If no damage is found, remove the tail rotor gearbox.		
	d. Attach a THIS COMPONENT WAS REMOVED FROM SERVICE BECAUSE OF A SUDDEN STOPPAGE tag on the tail rotor gearbox.		
429-MM, Chapter 65	e. Send the tail rotor gear box to an approved repair facility to disassemble, clean, and do a detailed inspection.		
429-MM, Chapter 67	**FLIGHT CONTROLS**		
	1. Visually examine the directional controls for condition and correct operation. Replace all damaged parts.		
	2. Discard the pitch change mechanism if one or more of the following defects are found:		
	• Fracture or evidence of yielding on the tail rotor pitch horn		

POST OFFICE BOX 482 • FORT WORTH, TEXAS 76101

Table 1. Conditional Inspections - Sudden Stoppage (Tail Rotor) Power ON or OFF (continued)

DATA REFERENCE	INSPECTION TASK DESCRIPTION	INITIAL	
		MECH	OTHER
	• Bent or broken pitch change control tube • Damage to the output shaft of the tail rotor gearbox 3. Discard all the rotating control bolts at the tail rotor hub and blade assemblies. 4. If the visual inspection shows no signs of damage, the directional controls are serviceable.		
429-MM, Chapter 64	**TAIL ROTOR** 1. If the sudden stoppage is the result of a tail rotor blade strike, discard both tail rotor hub and blade assemblies. 2. If the sudden stoppage occurred at the main rotor, transmission assembly, tail rotor driveshaft(s), or tail rotor gearbox, do a visual inspection of the tail rotor as follows: a. Visually examine both tail rotor hub and blade assemblies for external damage. b. If damage is found on any of the tail rotor hub and blade assemblies, remove both tail rotor hub and blade assemblies. c. Attach a THIS COMPONENT WAS REMOVED FROM SERVICE BECAUSE OF A SUDDEN STOPPAGE tag on both tail rotor hub and blade assemblies.		
429-MM, Chapter 64429-MM, Chapter 65	d. Disassemble, clean, and do a detailed inspection of both tail rotor hub and blade assemblies. e. If no damage is found, the tail rotor hub and blade assemblies are serviceable.		
429-MM, Chapter 53	**TAILBOOM** 1. Visually examine the internal and external areas of the tailboom assembly for condition. 2. Examine the hanger bearing and snubber supports for condition and security of attachment. 3. Examine the horizontal stabilizers and the auxiliary fin assemblies for condition and security of attachment. 4. Examine the vertical fin assembly for condition and security of attachment.		
429-MM, Chapter 65	5. Do a detailed inspection of the tail rotor gearbox mounting studs and dowel pins for cracks with a 10x magnifying glass or using a Fluorescent Penetrant Inspection (FPI) . 6. Visually examine the attaching hardware between the aft fuselage-to-tailboom and tailboom-to-aft fuselage frames, at FS 361.00, for condition and security. 7. Do a torque check of the tailboom attachments. 8. Do a flatness check of the aft fuselage-to-tailboom and tailboom-to-aft fuselage frames, at FS 361.00. Contact Product Support Engineering for information concerning the applicable procedures and associated equipment.		

POST OFFICE BOX 482 • FORT WORTH, TEXAS 76101

Conditional Inspections - Main Rotor Overspeed

Table 1. Conditional Inspections - Main Rotor Overspeed

DATA REFERENCE	INSPECTION TASK DESCRIPTION	INITIAL MECH	INITIAL OTHER
	DATE:		
	W.O.		
	FACILITY:		
	HELICOPTER S/N:		
	REGISTRY NO.:		
	TOTAL TIME:		
	SIGNATURE:		
	NOTE If the information contained in the following conditional inspection does not fully reflect the occurrence or if additional information or clarification is necessary, please contact Product Support Engineering for assistance. A main rotor overspeed is any incident above 104% rotor RPM (N_R) (power ON) or above 107% N_R (power OFF). **MAIN ROTOR OVERSPEED - UP TO 117%**		
PW207D1/D2 MM (P/N 3071602)	If a main rotor overspeed up to 117% has occurred, no airframe inspection is necessary. 1. Do an engine overspeed inspection.		
	MAIN ROTOR OVERSPEED - IN EXCESS OF 118% If a main rotor overspeed in excess of 118% has occurred, do the following inspections:		
429-MM, Chapter 62	**MAIN ROTOR** 1. Do an inspection of each main rotor blade as follows: a. Remove and clean the main rotor blade. b. Visually examine the main rotor blade for condition. c. Examine the blade bolt retention bushings for looseness. d. Examine the balance weight pocket for the following: (1) Gap between the retainers and the wedge more than 0.040 inch (1.01 mm), as shown in Figure 1. (2) Damage to the retainers and weights (3) Binding of the retainers and weights e. If any damage is found on the main rotor blade, do the following: (1) Attach a THIS COMPONENT WAS REMOVED FROM SERVICE BECAUSE OF A MAIN ROTOR OVERSPEED tag on the main rotor blade. (2) Send the main rotor blade to an approved facility for further inspection and repair. f. If no damage is found on the main rotor blade, the blade is serviceable. 2. If any yielding of an expandable or fixed diameter blade bolt is visible, discard the bolt. 3. Do an inspection of the main rotor hub assembly as follows: a. Visually examine the main rotor hub assembly for condition.		

POST OFFICE BOX 482 • FORT WORTH, TEXAS 76101

Table 1. Conditional Inspections - Main Rotor Overspeed (continued)

DATA REFERENCE	INSPECTION TASK DESCRIPTION	INITIAL	
		MECH	OTHER
	b. If any damage is found, do the following: (1) If a grip assembly is deformed, remove and discard all of the grips. (2) If the upper or lower yoke assembly is delaminated, remove and discard the yoke. (3) Remove the main rotor hub assembly. (4) Attach a THIS COMPONENT WAS REMOVED FROM SERVICE BECAUSE OF A MAIN ROTOR OVERSPEED tag on the main rotor hub assembly.		
429-MM, Chapter 62	(5) Disassemble, clean, and do a detailed inspection of the main rotor hub assembly. c. If no damage is found, the main rotor hub assembly is serviceable.		
429-MM, Chapter 64	**TAIL ROTOR** 1. Do an inspection of each tail rotor blade as follows: a. Remove the tail rotor blade. b. Examine the tail rotor blade for condition. c. Discard the tail rotor blade if any of the following damage is found: (1) The tip block has moved or has a crack (2) The blade bolt bushings are loose d. If any damage is found on the tail rotor blade, do the following: (1) Attach a THIS COMPONENT WAS REMOVED FROM SERVICE BECAUSE OF A MAIN ROTOR OVERSPEED tag on the tail rotor blade. (2) Send the tail rotor blade to an approved facility for further inspection and repair. (3) Discard the bolts of the tail rotor blade. e. If no damage is found on the tail rotor blade, the blade is serviceable. 2. Do an inspection of the tail rotor hub assemblies as follows: a. Visually examine the tail rotor hub assemblies for condition. b. If any damage is found, do the following: (1) Remove the tail rotor hub assemblies. (2) Attach a THIS COMPONENT WAS REMOVED FROM SERVICE BECAUSE OF A MAIN ROTOR OVERSPEED tag on the tail rotor hub assemblies.		
429-MM, Chapter 64	(3) Disassemble, clean, and do a detailed inspection of the tail rotor hub assemblies. c. If no damage is found, the tail rotor hub assemblies are serviceable.		
429-MM, Chapter 63 429-MM, Chapter 65	**MAIN ROTOR AND TAIL ROTOR DRIVE SYSTEMS** 1. Visually examine the chip detectors of the transmission assembly and tail rotor gearbox for contamination. If there are unwanted particles, do the following: a. Remove the transmission assembly or the tail rotor gearbox, as necessary. b. Attach a THIS COMPONENT WAS REMOVED FROM SERVICE BECAUSE OF A MAIN ROTOR OVERSPEED tag on the transmission assembly or tail rotor gearbox, as necessary.		

Table 1. Conditional Inspections - Main Rotor Overspeed (continued)

DATA REFERENCE	INSPECTION TASK DESCRIPTION	INITIAL MECH	INITIAL OTHER
	c. Send the transmission assembly or tail rotor gearbox to an approved repair facility to disassemble, clean, and do a detailed inspection of the transmission assembly or tail rotor gearbox, as necessary.		
429-MM, Chapter 63 429-MM, Chapter 65	2. Examine the engine-to-transmission driveshafts for condition and security of attachment.		
	3. Examine all of the tail rotor driveshafts for condition and security of attachment.		
	4. Examine the forward and aft impellers of the fan shaft assembly for condition with a flashlight and an inspection mirror.		
429-MM, Chapter 71 PW207D1/D2 MM (P/N 3071602)	**POWER PLANT** 1. Do an engine overspeed inspection.		
	COMPLETION TASKS		
429-MM, Chapter 95	1. Download the exceedances and clear the DU memory.		
	CAUTION **A QUALIFIED PERSON MUST BE AT THE HELICOPTER CONTROLS DURING THE FOLLOWING PROCEDURE.**		
BHT-429-FM-1, Section 2	2. Start the engines and do a one-hour ground run (100% rotor RPM (N_R)).		
	3. Visually examine the transmission and engine oil systems and the fuel system for leakage.		
	4. Visually examine the chip detectors of the transmission assembly and tail rotor gearbox for contamination. If there are no unwanted particles, the main rotor and tail drive systems are serviceable. If there are unwanted particles on a chip detector, do the following:		
429-MM, Chapter 63 429-MM, Chapter 65	a. Remove the transmission assembly or the tail rotor gearbox, as necessary.		
	b. Attach a THIS COMPONENT WAS REMOVED FROM SERVICE BECAUSE OF A MAIN ROTOR OVERSPEED tag on the transmission assembly or tail rotor gearbox, as applicable.		
	c. Send the transmission assembly or tail rotor gearbox to an approved repair facility to disassemble, clean, and do a detailed inspection of the transmission assembly or tail rotor gearbox, as necessary.		
	5. If there are no unwanted particles, the transmission assembly and the tail rotor gearbox are serviceable.		
	6. Return the helicopter to service.		

POST OFFICE BOX 482 • FORT WORTH, TEXAS 76101

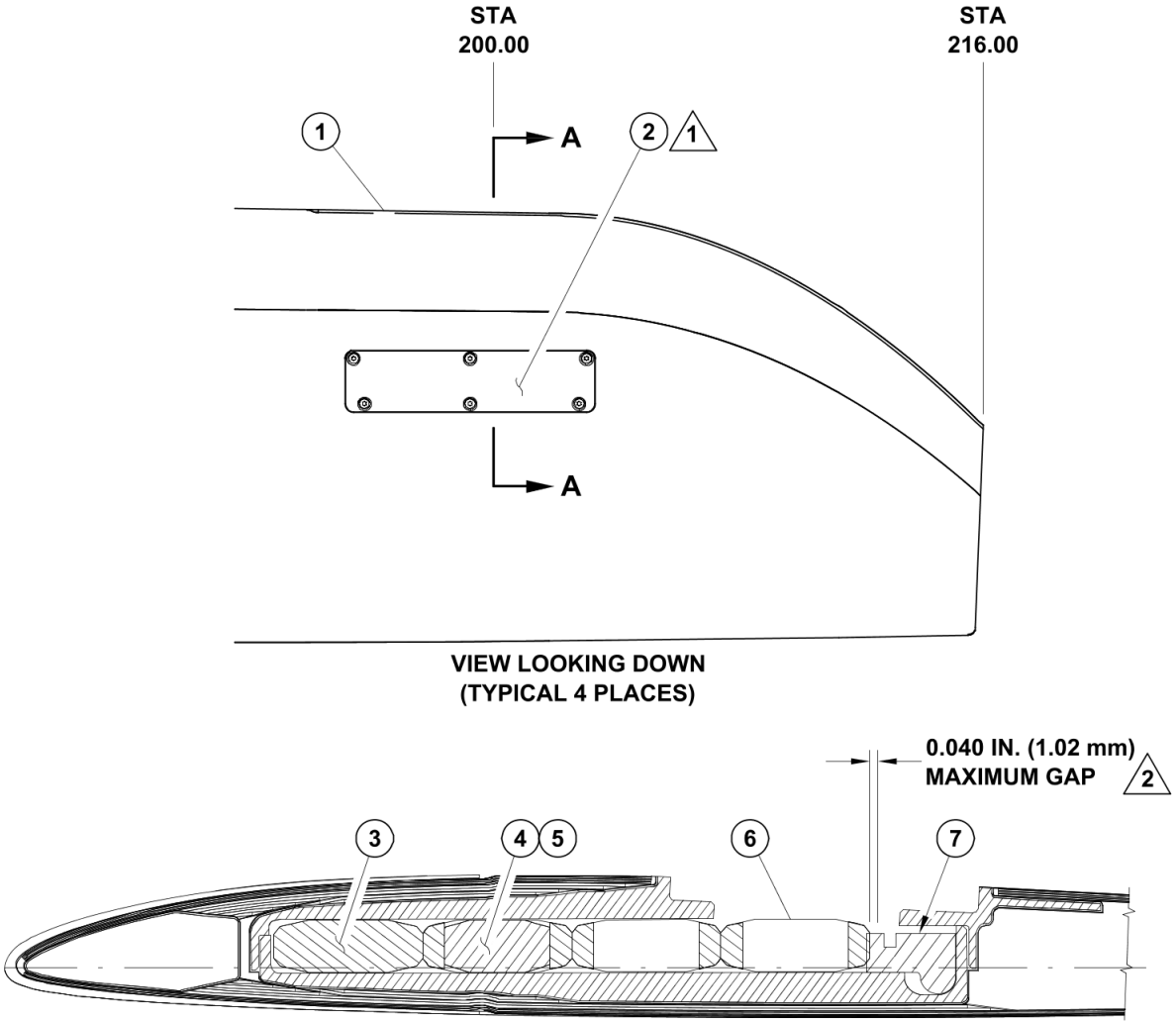

1. Main rotor blade assembly
2. Product balance weight pocket
3. Weight
4. Weight
5. Weight
6. Retainer
7. Wedge

NOTES

1. Refer to Chapter 18 for removal and installation of the product balance weight pocket cover.

2. Examine for gap between wedge (7) and retainer (6), as shown. Due to product balance positioning requirements, weight (3) may also be positioned adjacent to wedge (7).

ICN-429-A-055000-B-97499-00001-A-001-01

Figure 1. Product Balance Weight Pocket - Conditional Inspections (Sheet 1 of 1)

POST OFFICE BOX 482 • FORT WORTH, TEXAS 76101

Conditional Inspections - Overtorque

Table 1. Conditional Inspections - Overtorque

DATA REFERENCE	INSPECTION TASK DESCRIPTION	INITIAL MECH	INITIAL OTHER
	DATE:		
	W.O.		
	FACILITY:		
	HELICOPTER S/N:		
	REGISTRY NO.:		
	TOTAL TIME:		
	SIGNATURE:		
	NOTE If the information contained in the following conditional inspection does not fully reflect the occurrence or if additional information or clarification is necessary, please contact Product Support Engineering for assistance. **NOTE** For One Engine Inoperative (OEI) overtorque, refer to the OEI limit override inspection (429-A-05-50-00-06A-284A-A / 00054). An overtorque is an incident in which torsional loads greater than those permitted have been applied to the helicopter dynamic system.		
	OVERTORQUE - 101 TO 110% If an overtorque of 101 to 110% has occurred, no airframe inspection is necessary. **NOTE** Refer to the PW207D1/D2 Maintenance Manual (P/N 3071602) for unscheduled maintenance checks and operating limits.		
PW207D1/D2 MM (P/N 3071602)	1. Check the engine overtorque and over-temperature limits and do the necessary inspection requirements.		
	COMPLETION TASK		
429-MM, Chapter 95	1. Download the exceedances and clear the DU memory.		
	OVERTORQUE - 111 TO 120% If an overtorque of 111 to 120% has occurred, do the following inspections:		
429-MM, Chapter 62	**MAIN ROTOR**		
	1. Do an inspection of each main rotor blade as follows:		
	a. Clean the main rotor blade.		
	b. Visually examine the main rotor blade for condition.		
	c. Examine the upper and lower skins for disbonding.		
	d. If any damage is found on the main rotor blade, do the following:		
	(1) Attach a THIS COMPONENT WAS REMOVED FROM SERVICE BECAUSE OF AN OVERTORQUE tag on the main rotor blade.		
	(2) Send the main rotor blade to an approved facility for further inspection and repair.		
	e. If no damage is found on the main rotor blade, the blade is serviceable.		
	f. If any yielding of an expandable or fixed diameter blade bolt is visible, discard the bolt.		

POST OFFICE BOX 482 • FORT WORTH, TEXAS 76101

Table 1. Conditional Inspections - Overtorque (continued)

DATA REFERENCE	INSPECTION TASK DESCRIPTION	INITIAL	
		MECH	OTHER
	2. Do an inspection of the main rotor hub assembly as follows: a. Visually examine the main rotor hub assembly for condition. b. If any damage is found, do the following: (1) If a grip assembly is deformed, remove and discard all of the grips. (2) If the upper or lower yoke assembly is delaminated, remove and discard the yoke(s). (3) If the elastomeric thrust bearing, shear bearing, or lead-lag damper is separated or damaged, discard the applicable part(s). (4) Remove the main rotor hub assembly. (5) Attach a THIS COMPONENT WAS REMOVED FROM SERVICE BECAUSE OF AN OVERTORQUE tag on the main rotor hub assembly.		
429-MM, Chapter 62	(6) Disassemble, clean, and do a detailed inspection of the main rotor hub assembly. c. If no damage is found, the main rotor hub assembly is serviceable. 3. Visually examine the swashplate and support assembly for condition. 4. Visually examine the pitch link assemblies for condition and replace any damaged part.		
429-MM, Chapter 67	**FLIGHT CONTROLS** 1. Visually examine the cyclic tube assemblies for condition and replace any damaged part.		
429-MM, Chapter 63	**MAIN ROTOR DRIVE SYSTEM** 1. Visually examine the chip detectors of the transmission assembly for contamination. If there are unwanted particles, do the following: a. Remove the transmission assembly. b. Attach a THIS COMPONENT WAS REMOVED FROM SERVICE BECAUSE OF AN OVERTORQUE tag on the transmission assembly. c. Send the transmission assembly to an approved repair facility to disassemble, clean, and do a detailed inspection. 2. Visually examine the transmission top case, adapter assemblies, and attachments to the pylon beam assemblies for condition and security. If damage is found, do the following: a. Remove the transmission assembly. b. Attach a THIS COMPONENT WAS REMOVED FROM SERVICE BECAUSE OF AN OVERTORQUE tag on the transmission assembly.		
429-MM, Chapter 63	c. Send the transmission assembly to an approved repair facility to disassemble, clean, and do a detailed inspection. 3. Visually examine the pylon beam assemblies, vertical Liquid Inertial Vibration Eliminator (LIVE) mounts, pitch restraint spring assemblies, fitting assemblies, and stop pins for condition. 4. Visually examine for the attaching hardware between the pylon beam assemblies and the cabin roof beams for condition and security. 5. Do an inspection of each engine-to-transmission driveshaft as follows: a. Examine the engine-to-transmission driveshaft for condition and security of attachment. b. If any damage is found on the engine-to-transmission driveshaft, remove and discard the driveshaft. c. If no damage is found on the engine-to-transmission driveshaft, the driveshaft is serviceable.		

Table 1. Conditional Inspections - Overtorque (continued)

DATA REFERENCE	INSPECTION TASK DESCRIPTION	INITIAL MECH	INITIAL OTHER
429-MM, Chapter 65	**TAIL ROTOR DRIVE SYSTEM** 1. Visually examine the chip detector of the tail rotor gearbox for contamination. If there are unwanted particles, do the following: a. Remove the tail rotor gearbox. b. Attach a THIS COMPONENT WAS REMOVED FROM SERVICE BECAUSE OF AN OVERTORQUE tag on the tail rotor gearbox. c. Send the tail rotor gearbox to an approved repair facility to disassemble, clean, and do a detailed inspection. 2. Do a torque check of the tail rotor gearbox attachment hardware. 3. Examine all the components of the tail rotor driveshaft assembly for condition and security of attachment. a. If any damage is found, repair or replace the damaged part(s) as necessary. b. If no damage is found, the tail rotor driveshaft assembly is serviceable.		
429-MM, Chapter 64 429-MM, Chapter 64	**TAIL ROTOR** 1. Do an inspection of each tail rotor blade as follows: a. Visually examine the tail rotor blade for condition. b. If any damage is found on the tail rotor blade, do the following: (1) Attach a THIS COMPONENT WAS REMOVED FROM SERVICE BECAUSE OF AN OVERTORQUE tag on the tail rotor blade. (2) Send the tail rotor blade to an approved facility for further inspection and repair. c. If no damage is found on the tail rotor blade, the blade is serviceable. 2. Do an inspection of the tail rotor hub assemblies as follows: a. Visually examine the tail rotor hub assemblies for condition. b. If any damage is found, do the following: (1) Remove the tail rotor hub assemblies. (2) Attach a THIS COMPONENT WAS REMOVED FROM SERVICE BECAUSE OF AN OVERTORQUE tag on the tail rotor hub assemblies. (3) Disassemble, clean, and do a detailed inspection of the tail rotor hub assemblies. c. If no damage is found, the tail rotor hub assemblies are serviceable.		
429-MM, Chapter 71 PW207D1/D2 MM (P/N 3071602) 429-MM, Chapter 95	**POWER PLANT** **NOTE** Refer to the PW207D1/D2 Maintenance Manual (P/N 3071602) for unscheduled maintenance checks and operating limits. 1. Check the engine overtorque and over-temperature limits and do the applicable inspection requirements. **COMPLETION TASKS** 1. Download the exceedances and clear the DU memory. **CAUTION** **A QUALIFIED PERSON MUST BE AT THE HELICOPTER CONTROLS DURING THE FOLLOWING PROCEDURE.**		

POST OFFICE BOX 482 • FORT WORTH, TEXAS 76101

Table 1. Conditional Inspections - Overtorque (continued)

DATA REFERENCE	INSPECTION TASK DESCRIPTION	INITIAL	
		MECH	OTHER
BHT-429-FM-1, Section 2	2. Start the engines and do a one-hour ground run (100% rotor RPM (N_R)).		
	3. Visually examine the transmission and engine oil systems and the fuel system for leakage.		
	4. Visually examine the chip detectors of the transmission assembly and tail rotor gearbox for contamination. If there are no unwanted particles, the main rotor and tail drive systems are serviceable. If there are unwanted particles on a chip detector, do the following:		
429-MM, Chapter 63 429-MM, Chapter 65	a. Remove the transmission assembly or the tail rotor gearbox, as necessary.		
	b. Attach a THIS COMPONENT WAS REMOVED FROM SERVICE BECAUSE OF AN OVERTORQUE tag on the transmission assembly or tail rotor gearbox, as necessary.		
	c. Send the transmission assembly or tail rotor gearbox to an approved repair facility to disassemble, clean, and do a detailed inspection of the transmission assembly or tail rotor gearbox, as necessary.		
	5. If there are no unwanted particles, the transmission assembly and the tail rotor gearbox are serviceable.		
	6. Return the helicopter to service.		
	OVERTORQUE - ABOVE 120%		
	NOTE Follow the instructions as necessary per assembly. Use the wear, damage, and repair limits and other necessary data. Make sure that the parts in each assembly are within the dimension limits and that they have not yielded or become deformed.		
	If an overtorque has exceeded 120%, do the following:		
	1. Remove the following components:		
429-MM, Chapter 62	• Main rotor hub assembly		
429-MM, Chapter 63	• Mast assembly		
429-MM, Chapter 63	• Transmission assembly		
	2. Attach a THIS COMPONENT WAS REMOVED FROM SERVICE BECAUSE OF AN OVERTORQUE tag on the main rotor hub assembly, mast assembly, and transmission assembly.		
429-MM, Chapter 62	3. Disassemble, clean, and do a detailed inspection of the main rotor hub assembly.		
429-MM, Chapter 63	4. Disassemble, clean, and do a detailed inspection of the mast assembly.		
	5. Send the transmission assembly to an approved repair facility to disassemble, clean, and do a NDT inspection of the transmission top case assembly.		
	6. Visually examine the other components that are listed in the inspections following an overtorque of 111 to 120%.		

POST OFFICE BOX 482 • FORT WORTH, TEXAS 76101

Conditional Inspections - One Engine Inoperative (OEI)

Table 1. Conditional Inspections - One Engine Inoperative (OEI)

DATA REFERENCE	INSPECTION TASK DESCRIPTION	INITIAL MECH	INITIAL OTHER
	DATE:		
	W.O.		
	FACILITY:		
	HELICOPTER S/N:		
	REGISTRY NO.:		
	TOTAL TIME:		
	SIGNATURE:		
429-MM, Chapter 95	**NOTE** If the information contained in the following conditional inspection does not fully reflect the occurrence or if additional information or clarification is required, please contact Product Support Engineering for assistance. The Display Unit (DU) records One Engine Inoperative (OEI) events (30-minute, two-minute, 30-second) and OEI exceedances, including the total duration, time, and date of occurrence for each engine. If an OEI (30-minute, two-minute, 30-second) exceedance has occurred, do the following: **NOTE** The DU will monitor and record parameter exceedances and OEI events for maintenance purposes. The DU will provide a ENG 1/2 EXCEED or 1/2 OEI TIME USED caution message indicating that an OEI exceedance has been recorded. 1. For detailed maintenance actions, go to the OEI history display on the DU and view the OEI exceedances. 2. If an OEI exceedance has occurred, do the following inspections:		
429-MM, Chapter 71 PW207D1/D2 MM (P/N 3071602)	**POWER PLANT** 1. Do the applicable mandatory engine maintenance actions. Refer to the airworthiness limitation section of the engine maintenance manual.		
429-MM, Chapter 53	**FUSELAGE** 1. No airframe inspection is required.		
429-MM, Chapter 95	**COMPLETION TASKS** 1. Download the engine exceedances and clear the DU memory. 2. Return the helicopter to service.		

POST OFFICE BOX 482 • FORT WORTH, TEXAS 76101

Intentionally blank page

POST OFFICE BOX 482 • FORT WORTH, TEXAS 76101

Conditional Inspections - One Engine Inoperative (OEI) Limit Override

Table 1. Conditional Inspections - One Engine Inoperative (OEI) Limit Override

DATA REFERENCE	INSPECTION TASK DESCRIPTION	INITIAL MECH	INITIAL OTHER
	DATE:		
	W.O.		
	FACILITY:		
	HELICOPTER S/N:		
	REGISTRY NO.:		
	TOTAL TIME:		
	SIGNATURE:		
429-MM, Chapter 95	**NOTE** If the information contained in the following conditional inspection does not fully reflect the occurrence or if additional information or clarification is necessary, please contact Product Support Engineering for assistance. Use of a One Engine Inoperative (OEI) limit override is an event whereby the engine and drive system are taken to another level of power above the allowable 30-second OEI ratings. The capability to override 30-second OEI limits is intended for a one time use, last resort effort to prevent or reduce the effect of hitting the ground or other obstacles. This override feature allows for additional safety for crew and passengers in an exceptional emergency. If the OEI limit override feature has been used, do the following: **NOTE** The Display Unit (DU) will monitor and record parameter exceedances and OEI events for maintenance purposes. The DU will provide a OVRD USED warning message indicating that an OEI limit override has been recorded. 1. For detailed maintenance actions, go to the OEI history display on the DU and view the OEI exceedances. 2. If an OEI exceedance has occurred, do the following inspections:		
429-MM, Chapter 71 PW207D1/D2 MM (P/N 3071602)	**POWER PLANT** 1. Do the necessary mandatory engine maintenance actions. Refer to the airworthiness limitation section of the engine maintenance manual.		
429-MM, Chapter 63	**MAIN ROTOR DRIVE SYSTEM** 1. Do an inspection of each engine-to-transmission driveshaft as follows: a. Examine the engine-to-transmission driveshaft for condition and security of attachment. b. If any damage is found on the engine-to-transmission driveshaft, remove and discard the driveshaft. c. If no damage is found on the engine-to-transmission driveshaft, the driveshaft is serviceable. 2. Remove the transmission assembly. 3. Attach a THIS COMPONENT WAS REMOVED FROM SERVICE BECAUSE OF AN OEI LIMIT OVERRIDE – USE OF, ON THE NUMBER _____ ENGINE tag (specify No. 1 or No. 2 engine) on the transmission assembly. 4. Send the transmission assembly to an approved repair facility to disassemble, clean, and do a detailed inspection.		

POST OFFICE BOX 482 • FORT WORTH, TEXAS 76101

Table 1. Conditional Inspections - One Engine Inoperative (OEI) Limit Override (continued)

DATA REFERENCE	INSPECTION TASK DESCRIPTION	INITIAL	
		MECH	OTHER
	5. Replace the spiral bevel pinion and spiral bevel gear on the side that experienced the OEI limit override.		
	6. Replace the bull gear.		
	COMPLETION TASKS		
429-MM, Chapter 63	1. Visually examine the electrical circuits of the transmission chip detectors for continuity.		
	CAUTION **A QUALIFIED PERSON MUST BE AT THE HELICOPTER CONTROLS DURING THE FOLLOWING PROCEDURE.**		
BHT-429-FM-1, Section 2	2. Start the engines and do a one-hour ground run (100% rotor RPM (N_R)).		
	3. Visually examine the transmission and engine oil systems and the fuel system for leakage.		
429-MM, Chapter 63	4. Visually examine the chip detectors of the transmission assembly for contamination. If there are unwanted particles, do a visual identification of the particles.		
	5. If no unwanted particles are found, the transmission assembly is serviceable.		
429-MM, Chapter 95	6. Download the engine exceedances and clear the DU memory.		
	7. Return the helicopter to service.		

POST OFFICE BOX 482 • FORT WORTH, TEXAS 76101

Conditional Inspections - Compressor Stall or Surge

Table 1. Conditional Inspections - Compressor Stall or Surge

DATA REFERENCE	INSPECTION TASK DESCRIPTION	INITIAL MECH	INITIAL OTHER
	DATE:		
	W.O.		
	FACILITY:		
	HELICOPTER S/N:		
	REGISTRY NO.:		
	TOTAL TIME:		
	SIGNATURE:		
	NOTE If the information contained in the following conditional inspection does not fully reflect the occurrence or if additional information or clarification is necessary, please contact Product Support Engineering for assistance. An engine compressor stall or surge is a rumble or a series of pops and/or severe engine vibrations with an associated rapid rise in Measured Gas Temperature (MGT) . The compressor stall may cause severe torsional loading of the main driveshaft. The torsional loading can cause scoring of the transmission input gears and damage the main driveshafts. The tail rotor gearbox attachment fitting may be distorted or damaged. If a compressor stall or surge is reported and/or suspected, do the following inspections:		
429-MM, Chapter 71 PW207D1/D2 MM (P/N 3071602)	**POWER PLANT** 1. Visually examine the inlet Foreign Object Damage (FOD) screen or the inlet barrier filter (if installed) for blockage. 2. Visually examine the centrifugal compressor blades for accumulation of dirt, erosion, or FOD. a. If the centrifugal compressor is contaminated, do an engine compressor wash and a power assurance check. b. If the erosion or FOD is more than the permitted limits, do a tear down inspection. 3. If the previous steps do not determine the cause of the stall or surge, visually examine the power turbine assembly.		
429-MM, Chapter 63 429-MM, Chapter 63 429-MM, Chapter 65	**MAIN ROTOR DRIVE SYSTEM** 1. Do an inspection of each engine-to-transmission driveshaft as follows: a. Examine the engine-to-transmission driveshaft for condition and security of attachment. b. If any damage is found on the engine-to-transmission driveshaft, remove and discard the driveshaft. c. If no damage is found on the engine-to-transmission driveshaft, the driveshaft is serviceable. 2. Visually examine the chip detectors of the transmission assembly and tail rotor gearbox for contamination. a. If there are unwanted particles on a chip detector, remove the transmission assembly or the tail rotor gearbox, as necessary.		

POST OFFICE BOX 482 • FORT WORTH, TEXAS 76101

Table 1. Conditional Inspections - Compressor Stall or Surge (continued)

DATA REFERENCE	INSPECTION TASK DESCRIPTION	INITIAL	
		MECH	OTHER
	b. Attach a THIS COMPONENT WAS REMOVED FROM SERVICE BECAUSE OF A COMPRESSOR STALL OR SURGE tag on the transmission assembly or tail rotor gearbox, as necessary. c. Send the transmission assembly or tail rotor gearbox to an approved repair facility to disassemble, clean, and do a detailed inspection of the transmission assembly or tail rotor gearbox, as necessary. d. If there are no unwanted particles, the transmission assembly and the tail rotor gearbox are serviceable. 3. If the compressor stall or surge occurred on the engine No. 2 (right-hand engine), do the following: a. On the transmission assembly, remove the necessary inspection plug(s). b. Examine the gear teeth of the following parts for scoring and other mechanical damage with a borescope: • Spur gear (right-hand side) • Idler gear • Tail rotor drive gear • Spiral bevel pinion (right-hand side) 4. If the compressor stall or surge occurred on the engine No. 1 (left-hand engine), do the following: a. On the transmission assembly, remove the necessary inspection plug(s). b. Examine the gear teeth of the spiral bevel pinion (left-hand side) for scoring and other mechanical damage with a borescope. 5. If damage is found on gears of the transmission assembly, do the following: a. Remove the transmission assembly. b. Attach a THIS COMPONENT WAS REMOVED FROM SERVICE BECAUSE OF A COMPRESSOR STALL OR SURGE tag on the transmission assembly. c. Send the transmission assembly to an approved repair facility to disassembly, clean and do a detailed inspection. 6. If no damage is found on the gears, the transmission assembly is serviceable.		
429-MM, Chapter 65	**TAIL ROTOR DRIVE SYSTEM** 1. On the tail rotor gearbox, remove the inspection plug. 2. Examine the contact patterns of the pinion gear with a strong light. If the gear contact patterns show signs of scuffing, scoring, or other mechanical damage, do the following: a. Remove the tail rotor gearbox. b. Attach a THIS COMPONENT WAS REMOVED FROM SERVICE BECAUSE OF A COMPRESSOR STALL OR SURGE tag on the tail rotor gearbox. c. Send the tail rotor gearbox to an approved repair facility for inspection and restoration of the tail rotor gearbox. 3. Do a torque check of the tail rotor gearbox attachment hardware. 4. Examine all the components of the tail rotor driveshaft assembly for condition and security of attachment.		

Table 1. Conditional Inspections - Compressor Stall or Surge (continued)

DATA REFERENCE	INSPECTION TASK DESCRIPTION	INITIAL	
		MECH	OTHER
	a. If any damage is found, repair or replace the damaged part(s) as necessary. b. If no damage is found, the tail rotor driveshaft assembly is serviceable.		
429-MM, Chapter 64	**TAIL ROTOR** 1. Do an inspection of each tail rotor blade as follows: a. Visually examine the tail rotor blade for condition. b. If any damage is found on the tail rotor blade, do the following: (1) Attach a THIS COMPONENT WAS REMOVED FROM SERVICE BECAUSE OF A COMPRESSOR STALL OR SURGE tag on the tail rotor blade. (2) Send the tail rotor blade to an approved facility for further inspection and repair. c. If no damage is found on the tail rotor blade, the blade is serviceable. 2. Do an inspection of the tail rotor hub assemblies as follows: a. Visually examine the tail rotor hub assemblies for condition. b. If any damage is found, do the following: (1) Remove the tail rotor hub assemblies. (2) Attach a THIS COMPONENT WAS REMOVED FROM SERVICE BECAUSE OF A COMPRESSOR STALL OR SURGE tag on the tail rotor hub assemblies.		
429-MM, Chapter 64	(3) Disassemble, clean, and do a detailed inspection of the tail rotor hub assemblies. c. If no damage is found, the tail rotor hub assemblies are serviceable. 3. Visually examine the tail rotor blade bolts for deformation and damage. If any damage is found, discard the bolt(s).		
429-MM, Chapter 62	**MAIN ROTOR** 1. Do an inspection of each main rotor blade as follows: a. Clean the main rotor blade. b. Examine the main rotor blade for wrinkled skin, deformation, and cracks. If delamination is suspected, examine the blades for voids. c. If any damage is found on the main rotor blade, do the following: (1) Attach a THIS COMPONENT WAS REMOVED FROM SERVICE BECAUSE OF AN OVERTORQUE tag on the main rotor blade. (2) Send the main rotor blade to an approved facility for further inspection and repair. d. If no damage is found on the main rotor blade, the blade is serviceable. 2. Do a visual inspection of the main rotor hub assembly as follows: a. Visually examine the main rotor hub assembly for condition. b. If the main rotor hub assembly is damaged, do the following: (1) Remove the main rotor hub assembly. (2) Attach a THIS COMPONENT WAS REMOVED FROM SERVICE BECAUSE OF A COMPRESSOR STALL OR SURGE tag on the main rotor hub assembly.		
429-MM, Chapter 62	(3) Disassemble, clean, and do a detailed inspection of the main rotor hub assembly.		

POST OFFICE BOX 482 • FORT WORTH, TEXAS 76101

Table 1. Conditional Inspections - Compressor Stall or Surge (continued)

DATA REFERENCE	INSPECTION TASK DESCRIPTION	INITIAL MECH	INITIAL OTHER
	c. If no damage is found on the main rotor hub assembly, the main rotor hub assembly is serviceable. 3. Visually examine the rotating controls and replace any unserviceable parts as necessary.		
429-MM, Chapter 53	**FUSELAGE** 1. Examine the fuselage structure that supports the pylon beam assemblies for distortion, buckles, cracks, and sheared or loose fasteners. 2. Examine the fuselage structure that supports the engine mounts for distortion, buckles, cracks, and sheared or loose fasteners. 3. Examine the tailboom assembly for distortion, buckles, cracks in the skin, and sheared or loose fasteners. 4. If a damage found on the above areas cannot be repaired with standard repair procedures, contact Product Support Engineering.		
BHT-429-FM-1, Section 2 429-MM, Chapter 63 429-MM, Chapter 65	**COMPLETION TASKS** **CAUTION** **A QUALIFIED PERSON MUST BE AT THE HELICOPTER CONTROLS DURING THE FOLLOWING PROCEDURE.** 1. Start the engines and do a one-hour ground run with the helicopter light on skids (100% rotor RPM (N_R)). 2. Visually examine the chip detectors of the transmission assembly and tail rotor gearbox for contamination. a. If there are unwanted particles on a chip detector, remove the transmission assembly or the tail rotor gearbox, as necessary. b. Attach a THIS COMPONENT WAS REMOVED FROM SERVICE BECAUSE OF A COMPRESSOR STALL OR SURGE tag on the transmission assembly or tail rotor gearbox, as necessary. c. Send the transmission assembly or tail rotor gearbox to an approved repair facility to disassemble, clean, and do a detailed inspection of the transmission assembly or tail rotor gearbox, as necessary. d. If there are no unwanted particles, the transmission assembly and the tail rotor gearbox are serviceable. 3. Return the helicopter to service.		

POST OFFICE BOX 482 • FORT WORTH, TEXAS 76101

Conditional Inspections - Lightning Strike

Table 1. Conditional Inspections - Lightning Strike

DATA REFERENCE	INSPECTION TASK DESCRIPTION	INITIAL MECH	INITIAL OTHER
	DATE:		
	W.O.		
	FACILITY:		
	HELICOPTER S/N:		
	REGISTRY NO.:		
	TOTAL TIME:		
	SIGNATURE:		
	NOTE If the information contained in the following conditional inspection does not fully reflect the occurrence or if additional information or clarification is necessary, please contact Product Support Engineering for assistance. Because lightning behavior is difficult to predict, do a full inspection of the helicopter. Lightning damage can show as burn marks, heat discoloration, arc marks, or as small weld marks (where the metal has melted and become solid again). Honeycomb and other composite materials may show signs of delamination. Localized paint removal in composite materials may indicate damage to the expanded copper foil protection. **NOTE** In all instances below, if damage is found in any area, extend the inspection in those areas until no more damage is found. If any component shows signs of arc burns, discard the component. Use a magnetometer with a range no larger than ±5 gauss. Put the arrow or the red dot (depending on the magnetometer model) within 0.5 inch (13 mm) of the component you are checking. Point the arrow at the component. If parts of any component have a reading that is greater than 1 gauss, degauss these components. 1. If a helicopter lightning strike is reported or suspected, do a visual inspection of the helicopter as follows: a. Visually examine the following components for signs of arcing, burning, and condition, specially in the area around the mounting bolts and electrical bonding straps:		
429-MM, Chapter 62	• Main rotor hub and blade assembly		
429-MM, Chapter 63	• Transmission and mast assembly		
	• Pylon beam assemblies, vertical Liquid Inertial Vibration Eliminator (LIVE) mounts, and pitch restraint spring assemblies		
	• Engine-to-transmission driveshafts		
429-MM, Chapter 67	• Flight controls		
429-MM, Chapter 71	• Engines and engine mounts		
429-MM, Chapter 65	• Tail rotor driveshaft assembly		
	• Tail rotor gearbox and attachments to the tail rotor gearbox support		
429-MM, Chapter 64	• Tail rotor hub and blade assemblies		

POST OFFICE BOX 482 • FORT WORTH, TEXAS 76101

Table 1. Conditional Inspections - Lightning Strike (continued)

DATA REFERENCE	INSPECTION TASK DESCRIPTION	INITIAL MECH	INITIAL OTHER
	NOTE The degree of inaccuracy may indicate how dangerous the lightning strike damage is.		
429-MM, Chapter 95	• Magnetic compass for accuracy		
	• Pitot tubes, static ports, OAT probe, and associated system outputs for accuracy		
429-MM, Chapter 96	• Electrical systems		
429-MM, Chapter 97	• Avionics equipment		
	• Antennas		
429-MM, Chapter 53	b. Visually examine the external surfaces of the helicopter for signs of arcing or deformation, specially the following areas:		
	• Areas between the fuselage skin panels and the airframe structure		
	• Vertical fin assembly and attaching hardware		
	• Horizontal stabilizers and auxiliary fin assemblies		
	• Tailboom assembly and attaching hardware		
	• Tail rotor protector (if installed) including mounting hardware fittings and tube assembly		
429-MM, Chapter 32	• Landing gear and attachments		
429-MM, Chapter 62	**MAIN ROTOR**		
	1. If a lightning strike caused damage to the main rotor blades, do the following:		
	a. Remove and clean each main rotor blade.		
	NOTE Burn marks on the main rotor blades may be very small.		
	b. Examine each main rotor blade for signs of arcing and burning in the tip area and inside diameter of the blade bolt bushings.		
	c. If a main rotor blade shows signs of arcing, do the following:		
	(1) Attach a THIS COMPONENT WAS REMOVED FROM SERVICE BECAUSE OF A LIGHTNING STRIKE tag on the main rotor blade.		
	(2) Send the main rotor blade to an approved facility for further inspection and repair.		
	d. Examine each main rotor blade for delamination.		
	2. If a lightning strike caused damage to the main rotor hub assembly, do the following:		
	a. Examine the main rotor hub assembly for signs of arcing, burning, and delamination.		
	b. If the main rotor hub assembly shows signs of arcing, burning, or delamination, do the following:		
	(1) Remove the main rotor hub assembly.		
	(2) Attach a THIS COMPONENT WAS REMOVED FROM SERVICE BECAUSE OF A LIGHTNING STRIKE tag on the main rotor hub assembly.		
429-MM, Chapter 62	(3) Disassemble, clean, and do a detailed inspection of the main rotor hub assembly.		

Table 1. Conditional Inspections - Lightning Strike (continued)

DATA REFERENCE	INSPECTION TASK DESCRIPTION	INITIAL MECH	INITIAL OTHER
	(4) Discard any part of the main rotor hub assembly that shows signs of arcing or delamination.		
	c. If no signs of arcing are visible, the main rotor hub assembly is serviceable.		
	3. Remove the swashplate and support assembly and do the following:		
	a. Attach a THIS COMPONENT WAS REMOVED FROM SERVICE BECAUSE OF A LIGHTNING STRIKE tag on the swashplate and support assembly.		
429-MM, Chapter 62	b. Clean and do a detailed inspection of the swashplate and support assembly. If necessary send the swashplate and support assembly to an approved repair facility for inspection and restoration.		
	c. Discard any part of the swashplate and support assembly that shows signs of arcing.		
429-MM, Chapter 62 429-MM, Chapter 67	4. If a lightning strike caused damage to the fixed or rotating controls (collective, cyclic, or pitch link assemblies), replace all the bearings (or replace the next higher assembly, if necessary) in the fixed and rotating controls above the servo actuators.		
429-MM, Chapter 63	**MAIN ROTOR DRIVE SYSTEM**		
	1. Remove the mast assembly.		
429-MM, Chapter 63	2. Disassemble, clean, and do a visual inspection of the mast assembly for the following:		
	a. Visually examine all the parts of the mast assembly for signs of arc burns, specially the bearing ring raceways.		
	NOTE If the mast assembly is serviceable, the inspection of the transmission assembly is not necessary.		
	b. If no arc burns are visible on the mast assembly and if no arc burns are found on the main rotor hub and blade assembly or on any parts of the fixed or rotating controls, then the mast assembly is serviceable. However, replace the non-separable preload ball bearing before you return the mast assembly to service.		
	c. If arc burns are visible on the mast assembly, do the following:		
429-MM, Chapter 63	(1) Do a detailed inspection of the mast assembly.		
	(2) Remove the transmission assembly.		
	(3) Attach a THIS COMPONENT WAS REMOVED FROM SERVICE BECAUSE OF A LIGHTNING STRIKE tag on the transmission assembly.		
429-MM, Chapter 63	(4) Send the transmission assembly to an approved repair facility to disassemble, clean, and do a detailed inspection.		
	(5) Replace all the roller bearings and non-separable ball bearings before you return the transmission assembly and the mast assembly to service.		
	d. If the transmission assembly and the mast assembly are serviceable, visually examine the transmission chip detectors and the oil filter element for contamination after 5 to 10 hours of operation. If there are unwanted particles, do the following:		
	(1) Remove the mast assembly and the transmission assembly.		
	(2) Attach a THIS COMPONENT WAS REMOVED FROM SERVICE BECAUSE OF A LIGHTNING STRIKE tag on the mast assembly and transmission assembly.		

POST OFFICE BOX 482 • FORT WORTH, TEXAS 76101

Table 1. Conditional Inspections - Lightning Strike (continued)

DATA REFERENCE	INSPECTION TASK DESCRIPTION	INITIAL	
		MECH	OTHER
429-MM, Chapter 63	(3) Send the transmission assembly to an approved repair facility to disassemble, clean, and do a detailed inspection. (4) Replace all the roller bearings and non-separable ball bearings before you return the transmission assembly and the mast assembly to service. 3. Visually examine each of the following components for signs of arcing or burning: • Pylon beam assemblies • Adapter assemblies • Vertical LIVE mounts • Pitch restraint spring assemblies • Stop fitting assemblies a. If signs of arcing or burning are visible on a component, discard the component. b. If no signs of arcing or burning are visible on the components, the components are serviceable. 4. If arc burns are found in the transmission assembly, do the following: a. Remove the engine-to-transmission driveshafts. b. Attach a THIS COMPONENT WAS REMOVED FROM SERVICE BECAUSE OF A LIGHTNING STRIKE tag on the engine-to-transmission driveshafts. **NOTE** Refer to General Information Letter (IL) GEN-04-98 for the necessary shipping information and to obtain a Return Material Authorization (RMA) number. c. Send the engine-to-transmission driveshafts to Bell for further inspection and repair.		
429-MM, Chapter 64	**TAIL ROTOR** 1. If a lightning strike caused damage to the tail rotor blades, do the following: a. Remove and clean each tail rotor blade. **NOTE** Burn marks on the tail rotor blades may be very small. b. Examine each tail rotor blade for signs of arcing and burning in the tip area and inside diameter of the blade bolt bushings. c. If a tail rotor blade shows signs of arcing, do the following: (1) Attach a THIS COMPONENT WAS REMOVED FROM SERVICE BECAUSE OF A LIGHTNING STRIKE tag on the tail rotor blade. (2) Send the tail rotor blade to an approved facility for further inspection and repair. 2. If a lightning strike caused damage to the tail rotor hub assemblies, do the following: a. Remove and clean each tail rotor hub assembly. b. Examine each tail rotor hub assembly for signs of arcing and burning. c. If a tail rotor hub assembly shows signs of arcing or burning, discard the tail rotor hub assembly.		

Table 1. Conditional Inspections - Lightning Strike (continued)

DATA REFERENCE	INSPECTION TASK DESCRIPTION	INITIAL	
		MECH	OTHER
429-MM, Chapter 64 429-MM, Chapter 67	**TAIL ROTOR CONTROLS** 1. Do an inspection of the tail rotor controls as follows: a. Visually examine each pitch link assembly for condition. If signs of arcing are visible, discard the pitch link. b. Visually examine the crosshead and the pitch change control tube of the pitch change mechanism. If the lightning strike caused damage, do the following: c. Remove the pitch change mechanism. d. Attach a THIS COMPONENT WAS REMOVED FROM SERVICE BECAUSE OF A LIGHTNING STRIKE tag on the pitch change mechanism. e. Disassemble, clean, and do a detailed inspection of the pitch change mechanism. f. If signs of arcing or burning are visible on a part, discard the part.		
429-MM, Chapter 65	**TAIL ROTOR DRIVE SYSTEM** 1. Do an inspection of the tail rotor driveshaft assembly as follows: a. Remove and disassemble, as necessary, all the components of the tail rotor driveshaft assembly. b. Visually examine all the components of the tail rotor driveshafts for signs of arc burns. If arc burns are found on any one component, do the following: (1) Discard the segmented shaft assemblies and the fan shaft assembly (except for the two blower impellers and blower housings). (2) Replace all the ball bearings before you return the tail rotor driveshaft assembly to service. c. Visually examine the forward and aft impellers of the fan shaft assembly for condition. If signs of arc burns are visible on an impeller, discard the impeller. d. Visually examine the forward driveshaft assembly and both coupling assemblies for condition. If signs of arc burns are visible on a component, discard the component. 2. If no arc burns are visible on the tail rotor driveshaft assembly and if no arc burns are found on the tail rotor hub and blade assemblies or on any parts of the pitch change mechanism, then the tail rotor gearbox is serviceable. 3. If arc burns are visible on the tail rotor driveshaft assembly or if arc burns are found on the tail rotor hub and blade assemblies or on any parts of the pitch change mechanism, do the following: a. Remove the tail rotor gearbox. b. Attach a THIS COMPONENT WAS REMOVED FROM SERVICE BECAUSE OF A LIGHTNING STRIKE tag on the tail rotor gearbox.		
429-MM, Chapter 65	c. Send the tail rotor gearbox to an approved repair facility to disassemble, clean, and do a detailed inspection. d. Replace all the roller bearings and ball bearings before you return the tail rotor gearbox to service. 4. If the tail rotor gearbox is serviceable, visually examine the chip detector for contamination after 5 to 10 hours of operation. If there are unwanted particles, do the following: a. Remove the tail rotor gearbox.		

POST OFFICE BOX 482 • FORT WORTH, TEXAS 76101

Table 1. Conditional Inspections - Lightning Strike (continued)

DATA REFERENCE	INSPECTION TASK DESCRIPTION	INITIAL	
		MECH	OTHER
429-MM, Chapter 65	b. Attach a THIS COMPONENT WAS REMOVED FROM SERVICE BECAUSE OF A LIGHTNING STRIKE tag on the tail rotor gearbox. c. Send the tail rotor gearbox to an approved repair facility to disassemble, clean, and do a detailed inspection.		
429-MM, Chapter 95 429-MM, Chapter 96 429-MM, Chapter 97	**ELECTRICAL SYSTEM** 1. Make sure that all the electrical systems and avionics equipment operate correctly and that they show no signs of a lightning strike. 2. If a system does not operate correctly or if any signs of a lightning strike are visible, do the following: a. Do an operational check of the system. b. Do a Voltage Standing Wave Ratio (VSWR) check of all the antennas, antenna cables, and connectors.		
429-MM, Chapter 71 PW207D1/D2 MM (P/N 3071602)	**POWER PLANT** 1. Do an engine lightning strike inspection.		

POST OFFICE BOX 482 • FORT WORTH, TEXAS 76101

Conditional Inspections - Water Immersion

Preliminary requirements

Consumables, materials and expendables

Nomenclature	Identification No.	Qty	Remarks
Lubricating oil	C-020	AR	

Procedure

Table 1. Conditional Inspections - Water Immersion

DATA REFERENCE	INSPECTION TASK DESCRIPTION	INITIAL MECH	INITIAL OTHER
	DATE:		
	W.O.		
	FACILITY:		
	HELICOPTER S/N:		
	REGISTRY NO.:		
	TOTAL TIME:		
	SIGNATURE:		
BHT-ALL-SRM, Chapter 2, Structural Repair Manual	**NOTE** If the information contained in the following conditional inspection does not fully reflect the occurrence or if additional information or clarification is required, contact Product Support Engineering for assistance. The helicopter is considered recoverable when it has been immerged in water no deeper than 12 feet (3.6 m) and for less than 24 hours. Otherwise, the helicopter is considered unserviceable and uneconomically repairable. The hydrostatic pressures in water deeper than 12 feet (3.6 m) will damage the bonded panels and the various helicopter systems. Due to the corrosive effects of immersion for more than 24 hours, the damage is viewed as being beyond economical repair. If a water immersion of the helicopter has occurred, do the following: 1. Do the helicopter recovery procedure within 12 hours after removal from the water. Following the recovery, do an inspection of the helicopter as follows:		
BHT-ALL-SRM, Chapter 2, Structural Repair Manual	**FUSELAGE AND TAILBOOM** 1. Do a structural inspection of the fuselage and tailboom.		
BHT-ALL-SRM, Chapter 2, Structural Repair Manual	**FLIGHT CONTROLS** 1. Do an inspection of all the parts/components of the flight controls for contamination.		
429-MM, Chapter 62	**MAIN ROTOR** 1. Remove the main rotor blades. 2. Remove the main rotor hub assembly. 3. Attach a THIS COMPONENT WAS REMOVED FROM SERVICE BECAUSE OF A WATER IMMERSION tag on the main rotor hub assembly and on each main rotor blade. 4. Send the main rotor blades to an approved facility for inspection and repair.		

POST OFFICE BOX 482 • FORT WORTH, TEXAS 76101

Table 1. Conditional Inspections - Water Immersion (continued)

DATA REFERENCE	INSPECTION TASK DESCRIPTION	INITIAL	
		MECH	OTHER
429-MM, Chapter 62	5. Disassemble, clean, and do a detailed inspection of the main rotor hub assembly.		
429-MM, Chapter 64	**TAIL ROTOR** 1. Remove the tail rotor blades. 2. Remove the tail rotor hub assemblies. 3. Attach a THIS COMPONENT WAS REMOVED FROM SERVICE BECAUSE OF A WATER IMMERSION tag on the tail rotor hub assemblies and on each tail rotor blade. 4. Send the tail rotor blades to an approved facility for inspection and repair.		
429-MM, Chapter 64	5. Disassemble, clean, and do a detailed inspection of the tail rotor hub assemblies.		
429-MM, Chapter 63	**MAIN ROTOR DRIVE SYSTEM** 1. Remove the mast assembly. 2. Remove the transmission assembly. 3. If the immersion occurred in salt water, thoroughly flush the mast assembly and the transmission assembly with clean fresh water and drain. 4. Flush the mast assembly and the transmission assembly with lubricating oil (C-020) to prevent further deterioration. 5. Attach a THIS COMPONENT WAS REMOVED FROM SERVICE BECAUSE OF A WATER IMMERSION tag on the mast assembly and transmission assembly.		
429-MM, Chapter 63	6. Disassemble, clean, and do a detailed inspection of the mast assembly. 7. Send the transmission assembly to an approved repair facility to disassemble, clean, and do a detailed inspection. 8. Remove the engine-to-transmission driveshafts. 9. If the immersion occurred in salt water, rinse each engine-to-transmission driveshaft with clean fresh water and dry them thoroughly. 10. Attach a THIS COMPONENT WAS REMOVED FROM SERVICE BECAUSE OF A WATER IMMERSION tag on each engine-to-transmission driveshaft. 11. Do a detailed inspection of each engine-to-transmission driveshaft.		
429-MM, Chapter 65	**TAIL ROTOR DRIVE SYSTEM** SN: 57001-57080: 1. Remove the grease coupling assemblies. SN: 57081-Subsequent: 2. Remove the grease coupling assembly and the diaphragm coupling assembly. 3. Remove the forward driveshaft assembly. 4. Remove the fan shaft assembly. 5. Remove the segmented shaft assemblies. 6. Remove the coupling disc packs. 7. Remove the hanger assembly.		

Table 1. Conditional Inspections - Water Immersion (continued)

DATA REFERENCE	INSPECTION TASK DESCRIPTION	INITIAL MECH	INITIAL OTHER
	8. If the immersion occurred in salt water, rinse each component and the discs of each coupling disc pack with clean fresh water and dry them thoroughly. 9. Attach a THIS COMPONENT WAS REMOVED FROM SERVICE BECAUSE OF A WATER IMMERSION tag on each component. SN: 57001-57080: 10. Disassemble, clean, and do a detailed inspection of the grease coupling assemblies. SN: 57081-Subsequent: 11. Disassemble, clean, and do a detailed inspection of the grease coupling assembly and the diaphragm coupling assembly. 12. Do a detailed inspection of the forward driveshaft assembly. **NOTE** The grease-lubricated bearings shall be scrapped at inspection. 13. Disassemble, clean, and do a detailed inspection of the fan shaft assembly. 14. Do a detailed inspection of the segmented shaft assemblies. 15. Do a detailed inspection of the coupling disc packs. **NOTE** The grease-lubricated duplex bearing shall be scrapped at inspection. 16. Disassemble, clean, and do a detailed inspection of the hanger assembly. 17. Remove the tail rotor gearbox. 18. If the immersion occurred in salt water, thoroughly flush the tail rotor gearbox with clean fresh water and drain. 19. Flush the tail rotor gearbox with lubricating oil (C-020) to prevent further deterioration. 20. Attach a THIS COMPONENT WAS REMOVED FROM SERVICE BECAUSE OF A WATER IMMERSION tag on the tail rotor gearbox.		
429-MM, Chapter 65	21. Send the tail rotor gearbox to an approved repair facility to disassemble, clean, and do a detailed inspection of the tail rotor gearbox.		
BHT-ALL-SRM, Chapter 2, Structural Repair Manual	**ELECTRICAL SYSTEM** 1. Do an inspection of all the parts/components of the electrical systems and avionics equipment for contamination.		
BHT-ALL-SRM, Chapter 2, Structural Repair Manual	**FUEL SYSTEM** 1. Do an inspection of all the parts/components of the fuel system for contamination.		
BHT-ALL-SRM, Chapter 2, Structural Repair Manual	**HYDRAULIC SYSTEM** Do an inspection of all the parts/components of the hydraulic system for contamination.		
429-MM, Chapter 71 PW207D1/D2 MM (P/N 3071602)	**POWER PLANT** 1. Do an engine immersion in water inspection.		

POST OFFICE BOX 482 • FORT WORTH, TEXAS 76101

Intentionally blank page

POST OFFICE BOX 482 • FORT WORTH, TEXAS 76101

Conditional Inspections - Flight Through Hail

Table 1. Conditional Inspections - Flight Through Hail

DATA REFERENCE	INSPECTION TASK DESCRIPTION	INITIAL	
		MECH	OTHER
	DATE:		
	W.O.		
	FACILITY:		
	HELICOPTER S/N:		
	REGISTRY NO.:		
	TOTAL TIME:		
	SIGNATURE:		
	NOTE If the information contained in the following conditional inspection does not fully reflect the occurrence or if additional information or clarification is necessary, please contact Product Support Engineering for assistance. Collision with hail can cause extensive damage to the helicopter, such as denting, tearing, and puncturing of the fuselage, blades, and controls, shattering of the windshield, delamination of the nose cap, and instrument damage. Hail damage affects large surface areas of the helicopter. In most cases, Bell recommends replacement of any part(s) showing hail damage. If flight through hail is reported, do an inspection of the helicopter for hail damage as follows:		
429-MM, Chapter 53 BHT-ALL-SRM, Chapter 2, Structural Repair Manual	**FUSELAGE** 1. Visually examine the fuselage, cowling, and fairing skins for cracks, dents, tears, punctures, impact damage, perforation of air inlet screens, as necessary, and condition of the paint. Pay extra attention to these particularly exposed components: • Nose cap • Cockpit plenum and upper nose doors • Nose bay doors • Nose shell • Landing light cover panel and window • Forward fairing • Cabin plenum door • Forward cowl assemblies • Transmission cowlings • Engine cowlings • Sidebody panels 2. Visually examine the tailboom skins for cracks, dents, tears, punctures, impact damage, and condition of the paint. Pay extra attention to the driveshaft covers. 3. Visually examine the horizontal stabilizers, auxiliary fin assemblies, and vertical fin assemblies, for cracks, dents, tears, punctures, impact damage, and condition of the paint. Pay extra attention to the leading edges and the upper skins, as necessary.		
429-MM, Chapter 52	**DOORS AND WINDOWS**		

POST OFFICE BOX 482 • FORT WORTH, TEXAS 76101

Table 1. Conditional Inspections - Flight Through Hail (continued)

DATA REFERENCE	INSPECTION TASK DESCRIPTION	INITIAL	
		MECH	OTHER
BHT-ALL-SRM, Chapter 2, Structural Repair Manual	1. Visually examine the doors for cracks, dents, tears, punctures, impact damage, and condition of the paint. Pay extra attention to the crew doors.		
	2. Visually examine the windows for crazing, cracks, shattering, and impact damage. Pay extra attention to the windshield, crew door windows, and chin bubbles.		
429-MM, Chapter 62	**MAIN ROTOR**		
	1. Visually examine the main rotor blades for cracks, dents, tears, impact damage, and condition of the coating. Pay extra attention to the leading edge abrasion strips, tip caps, and upper skins. If delamination is suspected, examine the blades for voids.		
	2. If any damage is found on the main rotor blades, do the following:		
	a. Remove the main rotor blades.		
	b. Attach a THIS COMPONENT WAS REMOVED FROM SERVICE BECAUSE OF A FLIGHT THROUGH HAIL tag on each main rotor blade.		
	c. Send the main rotor blades to an approved facility for further inspection and repair.		
	3. If no damage is found on the main rotor blades, the blades are serviceable.		
	4. Visually examine the main rotor hub assembly for cracks, dents, tears, impact damage, and condition of the coating. Pay extra attention to the exposed areas of the yoke assemblies, grip assemblies, and upper mount assembly.		
	5. If any damage is found on the main rotor hub assembly, do the following:		
	a. Remove the main rotor hub assembly.		
	b. Attach a THIS COMPONENT WAS REMOVED FROM SERVICE BECAUSE OF A FLIGHT THROUGH HAIL tag on the main rotor hub assembly.		
429-MM, Chapter 62	c. Disassemble, clean, and do a detailed inspection of the main rotor hub assembly.		
	6. If no damage is found on the main rotor hub assembly, the main rotor hub assembly is serviceable.		
	7. Visually examine the main rotor controls for impact damage and replace any unserviceable parts as necessary.		
429-MM, Chapter 64	**TAIL ROTOR**		
	1. Visually examine the tail rotor blades for cracks, dents, tears, impact damage, and condition of the coating. Pay extra attention to the leading edge abrasion strips. If delamination is suspected, examine the blades for voids.		
	2. If any damage is found on the tail rotor blades, do the following:		
	a. Remove the tail rotor hub and blade assemblies.		
	b. Attach a THIS COMPONENT WAS REMOVED FROM SERVICE BECAUSE OF A FLIGHT THROUGH HAIL tag on the tail rotor hub assemblies and on each tail rotor blades.		
	c. Send the tail rotor blades to an approved facility for further inspection and repair.		
429-MM, Chapter 64	d. Disassemble, clean, and do a detailed inspection of the tail rotor hub assemblies.		
	3. If no damage is found on the tail rotor blades, the tail rotor hub and blade assemblies are serviceable.		

Table 1. Conditional Inspections - Flight Through Hail (continued)

DATA REFERENCE	INSPECTION TASK DESCRIPTION	INITIAL	
		MECH	OTHER
429-MM, Chapter 67	**FLIGHT CONTROLS** 1. Visually examine the rotating controls of the tail rotor directional controls for impact damage and replace any unserviceable parts as necessary.		
429-MM, Chapter 32	**LANDING GEAR** 1. Visually examine the exposed areas of the skid landing gear for impact damage and replace any unserviceable parts as necessary.		
429-MM, Chapter 95	**PITOT-STATIC SYSTEM** 1. Visually examine the pitot tubes for deformation and impact damage and replace any unserviceable parts as necessary.		
429-MM, Chapter 96	**EXTERIOR LIGHTING SYSTEM** 1. Visually examine the following lights for crazing, cracks, shattering, and impact damage to the lens and replace any unserviceable parts as necessary: • Stabilizer position lights • Tail position light • Anticollision light		
429-MM, Chapter 97	**AVIONICS** 1. Visually examine the following antennas for deformation and impact damage and replace any unserviceable parts as necessary: • GPS/WAAS/COMM antennas • VOR/GS/LOC antennas • ELT antenna		

POST OFFICE BOX 482 • FORT WORTH, TEXAS 76101

Intentionally blank page

POST OFFICE BOX 482 • FORT WORTH, TEXAS 76101

Conditional Inspections - Tail Rotor Blade Handling Damage

Table 1. Conditional Inspections - Tail Rotor Blade Handling Damage

DATA REFERENCE	INSPECTION TASK DESCRIPTION	INITIAL	
		MECH	OTHER
	DATE:		
	W.O.		
	FACILITY:		
	HELICOPTER S/N:		
	REGISTRY NO.:		
	TOTAL TIME:		
	SIGNATURE:		
	NOTE If the information contained in the following conditional inspection does not fully reflect the occurrence or if additional information or clarification is required, contact Product Support Engineering for assistance. Handling damage to the tail rotor blade can be caused by dropping or bumping the blade against another object or dropping an object on the blade. If a potential handling damage situation occurs, inspect the blade for damage as follows:		
429-MM, Chapter 64	**TAIL ROTOR** 1. Visually examine the tail rotor blades for cracks, dents, tears, visible impact damage, and condition of the coating/paint. Pay extra attention to the leading edge abrasion strips, trailing edge, and after-body region of blade. Note that delaminations can exist without any visual indications; therefore, the blade must be examined for voids using tap inspection techniques. 2. If any damage is found or suspected on the tail rotor blade(s), do the following: a. Remove the damaged tail rotor blade assembly. b. Attach a THIS COMPONENT WAS REMOVED FROM SERVICE BECAUSE OF HANDLING DAMAGE tag on the tail rotor blade(s). c. Send the tail rotor blade(s) to an approved facility for further inspection and repair. 3. If no damage is found on the tail rotor blades, the tail rotor blade assembly is serviceable.		

POST OFFICE BOX 482 • FORT WORTH, TEXAS 76101

Intentionally blank page

POST OFFICE BOX 482 • FORT WORTH, TEXAS 76101

Scheduled Component Inspections - General

NOTE

The component inspection interval for a component (or the failure to provide a inspection interval for a component) does not constitute a warranty of any kind. The only warranty applicable to the helicopter or any component is the warranty included in the Purchase Agreement for the helicopter or the component.

The inspection program for the components of the Model 429 helicopter is based on the component operating time and consists of the following:

- 1000-hour inspection (429-A-05-40-00-29A-281A-A / 00061):

  Complete the inspection every 1000 hours of component operating time.
- 5000-hour inspection (429-A-05-40-00-23A-281A-A / 00062):

  Complete the inspection every 5000 hours of component operating time.

The interval specified for the part numbers listed in the component restoration schedule (Table 1) applies to all successive dash numbers (e.g., -103, -105, -107, etc.) for the component, unless otherwise specified.

The interval, if any, for the BHT kit component and/or parts not covered in this chapter is included in the applicable Installation Instruction (II) or supplement in 429-MM, Chapter 99.

NOTE

The PW207D1/D2 Maintenance Manual (P/N 3071602) includes the instructions for continued airworthiness for the PW207D1/D2 engines, as installed in the Model 429 helicopter and operated in accordance with the limitations contained in the Flight Manual (BHT-429-FM-1, Section 1).

Refer to the PW207D1/D2 Maintenance Manual (P/N 3071602) for the Time Between Overhaul (TBO) applicable to the engine components.

5. Scheduled Component Inspections - Types of Scheduled Component Inspections

Other than the specific requirements stated in the scheduled component inspections, these inspections are restoration tasks, which consist of the disassembly, cleaning, and detailed inspection of the applicable component.

6. Scheduled Component Inspections - Interval Tolerance

The approval of the inspection interval tolerance by the governing aviation authority is the responsibility of the owner/operator. Please contact your governing aviation authority to obtain a scheduled component inspection interval tolerance. The tolerance does not apply to life limited parts and is to be used for maintenance scheduling only.

Table 1. Scheduled Component Inspections - Component (Overhaul) Restoration Schedule

NOMENCLATURE	PART NUMBER (1)	INTERVAL
	GENERATOR SYSTEM	
Starter Generator	206-062-200-141	1000 hours
	MAIN ROTOR	
Yoke Assemblies	429-010-103-105	5000 hours
Grip Assemblies	429-010-108-105	5000 hours
Main Rotor Drive Plate Assembly	429-010-109-101	5000 hours
Upper Mount Assembly	429-010-111-101	5000 hours
Lower Mount Assembly	429-010-113-101	5000 hours
Mast Adapter Assembly	429-010-114-101	5000 hours
Cone	429-010-116-103	5000 hours
Cone Assembly	429-010-117-101	5000 hours
Swashplate and Support Assembly	429-010-400-101	5000 hours
Drive Link Assembly	429-010-408-101	5000 hours

POST OFFICE BOX 482 • FORT WORTH, TEXAS 76101

Table 1. Scheduled Component Inspections - Component (Overhaul) Restoration Schedule (continued)

NOMENCLATURE	PART NUMBER (1)	INTERVAL
	MAIN ROTOR DRIVE SYSTEM	
Engine-to-transmission Driveshaft	206-340-300-105	5000 hours (2)
Rotor Brake Calipers	427-340-352-111/112	*3000 hours*
Transmission Assembly	*429-040-006-109*	5000 hours
Mast Assembly	429-040-011-101	5000 hours
	TAIL ROTOR	
Inboard Tail Rotor Hub Assembly	429-012-101-115	5000 hours
Outboard Tail Rotor Hub Assembly	429-012-101-117	5000 hours
Cone Set	429-012-107-101	5000 hours
Cone	429-012-113-101	5000 hours
	TAIL ROTOR DRIVE SYSTEM	
Tail Rotor Gearbox	429-042-001-101	5000 hours

NOTE:

1 The operating time specified for overhaul of any given part number listed applies to all successive dash numbers (or suffixes) for that component, unless otherwise specified.

2 Driveshaft must be overhauled at 5000 hours of operation and every 2500 hours of operation thereafter. Overhaul is to be accomplished by Kamatics Corporation only. Return driveshaft to Bell Helicopter Textron (BHT) per IL GEN-04-98.

POST OFFICE BOX 482 • FORT WORTH, TEXAS 76101

Scheduled Components Inspections - 1000-Hour Inspection

Procedure

Table 1. Scheduled Components Inspections - 1000-Hour Inspection

DATA REFERENCE/IMRR TASK NUMBER	TASK DESCRIPTION	ACCESS	ZONES	INITIAL	
				MECH	OTHER
	DATE: _____W.O.				
	FACILITY:				
	HELICOPTER S/N:				
	REGISTRY NO.:				
	TOTAL TIME:				
	SIGNATURE:				
	NOTE *To be done every 1000 hours of operating time.*				
	GENERAL				
429-A-04-00-00-00A-009A-A / 00007	*1. Make sure the life limited parts do not go over the service life.*				
429-MM, Chapter 12	*2. Do all the necessary lubrication tasks.*				
429-A-05-40-00-22A-281A-A / 00043	*3. Do all the miscellaneous inspections, as necessary.*				
429-MM, Chapter 99	*4. Do all the inspection tasks for the installed Bell Textron kits not included in this inspection, as necessary.*				
	5. Record these inspections as done in the helicopter log book.				
	PREPARATION TASKS				
	1. Remove the cowlings 600EL, 600ER, 600FL, and 600FR.				
	MAIN ROTOR DRIVE SYSTEM				
429-MM, Chapter 63 *636003*	*1. Do a detailed inspection of the rotor brake and disk assembly.*	*600FL, 600FR*	*611, 710*		
	GENERATOR POWER SYSTEM				
429-MM, Chapter 96 243003	*1. Do a restoration (overhaul) of the starter-generators (8010MG1 and 8010MG2).*	600EL, 600ER	*710*		
	COMPLETION TASKS				
	1. Install the cowlings 600EL, 600ER, 600FL, and 600FR.				

POST OFFICE BOX 482 • FORT WORTH, TEXAS 76101

Intentionally blank page

POST OFFICE BOX 482 • FORT WORTH, TEXAS 76101

Scheduled Component Inspections - 5000-Hour Inspection

Table 1. Scheduled Component Inspections - 5000-Hour Inspection

DATA REFERENCE/IMRR TASK NUMBER	TASK DESCRIPTION	ACCESS	ZONES	INITIAL MECH	INITIAL OTHER
	DATE: _____W.O.				
	FACILITY:				
	HELICOPTER S/N:				
	REGISTRY NO.:				
	TOTAL TIME:				
	SIGNATURE:				
	NOTE To be performed every 5000 hours of component operating time.				
429-A-04-00-00-00A-009A-A / 00007 429-MM, Chapter 12 429-A-05-40-00-22A-281A-A / 00043	**GENERAL** 1. Review helicopter log book and make sure that all recorded discrepancies have been corrected. 2. Do all necessary airworthiness directives. 3. Make sure that life limited parts do not exceed service life. 4. Do all necessary lubrication tasks. 5. Do all miscellaneous inspections, as necessary. 6. Record accomplishment of this inspection in the helicopter log book.				
429-MM, Chapter 06	**PREPARATION TASKS** 1. Remove panels 500G, 600EL, 600ER, 600FL, and 600FR.				
429-MM, Chapter 62 622003	**MAIN ROTOR** 1. Do a restoration (overhaul) of the upper mount assembly.	N/A	611		
429-MM, Chapter 62 622004	2. Do a restoration (overhaul) of the lower mount assembly.	N/A	611		
429-MM, Chapter 62 622005	3. Do a restoration (overhaul) of the grip assemblies.	N/A	611		
429-MM, Chapter 62 622006	4. Do a restoration (overhaul) of the upper and lower yoke assemblies.	N/A	611		
429-MM, Chapter 62 622008	5. Do a restoration (overhaul) of the upper cone and lower cone assembly.	N/A	611		
429-MM, Chapter 62 *622019*	*6. Do a restoration (overhaul) of the mast adapter assembly.*	N/A	*611*		
429-MM, Chapter 62 *622020*	*7. Do a restoration (overhaul) of the main rotor drive plate assembly.*	N/A	*611*		

POST OFFICE BOX 482 • FORT WORTH, TEXAS 76101

Table 1. Scheduled Component Inspections - 5000-Hour Inspection (continued)

DATA REFERENCE/IMRR TASK NUMBER	TASK DESCRIPTION	ACCESS	ZONES	INITIAL MECH	INITIAL OTHER
429-MM, Chapter 62 623003	8. Do a restoration (overhaul) of the swashplate and support assembly, including the following:	N/A	611		
429-MM, Chapter 62 623006	a. Restoration (overhaul) of the collective lever assembly.	N/A	611		
429-MM, Chapter 62 623008	b. Restoration (overhaul) of the drive link assembly.	N/A	611		
429-MM, Chapter 62 623010	c. Restoration (overhaul) of the sleeve assembly.	N/A	611		
429-MM, Chapter 62 623014	d. Restoration (overhaul) of the collective lever link.	N/A	611		
429-MM, Chapter 62 623016	e. Restoration (overhaul) of the tilt ball assembly.	N/A	611		
429-MM, Chapter 62 623019	f. Restoration (overhaul) of the duplex assembly.	N/A	611		
	MAIN ROTOR DRIVE SYSTEM				
429-MM, Chapter 63 631002	1. Do a restoration (overhaul) of the transmission assembly, including the following:	600CL, 600CR	611		
429-MM, Chapter 63 631007	a. Restoration (overhaul) of the accessory drive.	600EL, 600FL	611		
429-MM, Chapter 63 631008	b. Restoration (overhaul) of the freewheel assembly (clutch).	600EL, 600ER, 600FL, 600FR	611		
429-MM, Chapter 63 634004	c. Restoration (overhaul) of the oil pressure regulator valve.	600FL	611		
429-MM, Chapter 63 634005	d. Restoration (overhaul) of the oil pump.	600FL	611		
429-MM, Chapter 63 632002	2. Restoration (overhaul) of the engine-to-transmission driveshafts	600EL, 600ER, 600FL, 600FR	611, 710		
429-MM, Chapter 63 633003	3. Do a restoration (overhaul) of the mast assembly.	600EL, 600ER, 600FL, 600FR	611		
429-MM, Chapter 63 638001	4. Do a restoration (overhaul) of the air conditioning drive quill, if installed.	600FR	611		
	TAIL ROTOR				
429-MM, Chapter 64 642005	1. Do a restoration (overhaul) of the inboard and outboard yoke assemblies.	N/A	510		

POST OFFICE BOX 482 • FORT WORTH, TEXAS 76101

Table 1. Scheduled Component Inspections - 5000-Hour Inspection (continued)

DATA REFERENCE/IMRR TASK NUMBER	TASK DESCRIPTION	ACCESS	ZONES	INITIAL	
				MECH	OTHER
429-MM, Chapter 64 642007	2. Do a restoration (overhaul) of the cone and cone set.	N/A	510		
429-MM, Chapter 65 652003	**TAIL ROTOR DRIVE SYSTEM** 1. Do a restoration (overhaul) of the tail rotor gearbox.	500F, 500G	510		
429-MM, Chapter 06	**COMPLETION TASKS** 1. Install panels 500G, 600EL, 600ER, 600FL, and 600FR.				

POST OFFICE BOX 482 • FORT WORTH, TEXAS 76101

Intentionally blank page