BELL 505

MAINTENANCE PLANNING INFORMATION

NOTICE

The instructions set forth in this manual, as supplemented or modified by Alert Service Bulletins (ASB) or other directions issued by Bell Helicopter Textron Inc. and Airworthiness Directives (AD) issued by the applicable regulatory agencies, shall be strictly followed.

Copyright © 2015 Bell Helicopter Textron Inc. and Bell Helicopter Textron Canada Ltd. All rights reserved

POST OFFICE BOX 482 • FORT WORTH, TEXAS 76101

Export Classification C, ECCN EAR99 **Issue 023 - 21 OCT 2024**

POST OFFICE BOX 482 • FORT WORTH, TEXAS 76101

PROPRIETARY RIGHTS NOTICE

These data are proprietary to Bell Helicopter Textron, Inc. Disclosure, reproduction, or use of these data for any purposes other than helicopter operation and maintenance is forbidden without prior authorization from Bell Helicopter Textron, Inc.

DESTINATION CONTROL STATEMENT

These commodities, technology, or software were exported from the United States in accordance with the Export Administration Regulations (EAR). Diversion contrary to U.S. law prohibited.

Additional copies of this publication may be obtained by contacting:
Commercial Publications Distribution Center Bell Helicopter Textron
Inc. P.O. Box 482 Fort Worth, Texas 76101-0482

POST OFFICE BOX 482 • FORT WORTH, TEXAS 76101

Highlights

The listed changes are introduced in issue 023, dated 2024-10-21, of this publication.

C = Changed data module, N = New data module

N/C	Data module	Reason for update
Chapter 5 - Scheduled/Unscheduled Maintenance:		
C	505-A-05-40-00-00A-018A-A / 00018, Scheduled maintenance checks - Introduction	
C	505-A-05-45-00-20A-000A-A / 00059, 3 years inspection - Function, data for plans and description	Updated the reference link from DMC-505-A-53-30-03-00A-281C-A to DMC-505-A-53-30-03-00A-281A-A for task number 53-80-01-001.
C	505-A-05-45-00-45A-000A-A / 00064, 9 years inspection - Function, data for plans and description	Task no. '62-30-00-022' - Updated reference (DMC) link from DMC-505-A-62-30-01-00A-720A-A to DMC-505-A-62-30-01-00A-322A-B.

POST OFFICE BOX 482 • FORT WORTH, TEXAS 76101

Intentionally blank page

POST OFFICE BOX 482 • FORT WORTH, TEXAS 76101

Bulletins - Technical standard records

This Bulletin Record provides a current listing of applicable bulletins that have been incorporated in this manual. Subsequent applicable bulletins will be incorporated in future revisions/reissues.

Table 1. Alert Service Bulletins (ASB)

ASB number	Subject	Date
505-21-27 (1)	Restraint Assembly (Live Pylon) SLS-030-910-109.	07 October 2021
1 *This and all previously issued applicable bulletins have been incorporated, except 505-19-12, 505-20-15, 505-20-18.*		

Table 2. Technical Bulletins (TB)

TB number	Subject	Date
505-21-29 (1)	Retrofit Kit Cargo Hook - EASA.	05 October 2021
1 This and all previously issued applicable bulletins have been incorporated, except 505-17-01, 505-18-07, 505-18-10, 505-21-29.		

POST OFFICE BOX 482 • FORT WORTH, TEXAS 76101

Temporary revision Record - Technical standard records

This Temporary Revision Record provides a current listing of active Temporary Revisions against the manual. Temporary Revisions which have been canceled/incorporated will only be maintained on the record until the next revision is issued. If there are no Temporary Revisions shown on the record, this is confirmation that there are no Temporary Revisions issued against the manual.

Temporary Revision No.	Title	Date issued	Data canceled

POST OFFICE BOX 482 • FORT WORTH, TEXAS 76101

Customer support and services - Function

1. Customer support and services

Flying smart means that no matter where you are, or what time it is, you can make a call and get additional information, clarification, or advice on a technical or operational issue concerning your helicopter or information contained in our Technical Publications. Product Support Engineering (PSE) is just a phone call away and may be contacted as follows:

Phone:	450-437-2862 or 800-363-8023 (US/Canada)
Fax:	450-433-0272
E-mail:	productsupport@bellflight.com

POST OFFICE BOX 482 • FORT WORTH, TEXAS 76101

Customer feedback, helicopter sales notice and warranty - Administrative forms and data

WARNING

THIS MANUAL APPLIES ONLY TO HELICOPTERS AND COMPONENTS MAINTAINED IN ACCORDANCE WITH BELL APPROVED PROCEDURES USING BELL APPROVED PARTS.

ALL INSPECTION, REPAIR AND OVERHAUL PROCEDURES PUBLISHED BY BELL, INCLUDING PART RETIREMENT LIFE, ARE BASED SOLELY ON THE USE OF BELL PARTS THAT HAVE BEEN MAINTAINED USING BELL APPROVED DATA. THE DATA PUBLISHED HEREIN OR OTHERWISE SUPPLIED BY BELL IS NOT APPLICABLE TO NON-BELL PARTS OR PARTS THAT HAVE BEEN REPAIRED USING DATA AND/OR PROCESSES NOT APPROVED BY BELL.

BELL IS NOT RESPONSIBLE FOR ANY PART OTHER THAN THOSE THAT IT HAS APPROVED.

BEFORE PERFORMING ANY PROCEDURE CONTAINED IN THIS MANUAL YOU MUST INSPECT THE AFFECTED PARTS AND RECORDS FOR EVIDENCE OF ANY MANUFACTURE, REPAIR, REWORK, OR USE OF A PROCESS NOT APPROVED BY BELL.

IF YOU IDENTIFY OR SUSPECT THE USE OF PARTS NOT AUTHORIZED BY BELL, EITHER REMOVE THE AFFECTED ITEM FROM THE AIRCRAFT OR OBTAIN INSTRUCTIONS FOR CONTINUED AIRWORTHINESS FROM THE MANUFACTURER OR THE ORGANIZATION THAT APPROVED THE REPAIR.

Refer to Figure 1, Figure 2, Figure 3, and Figure 4.

POST OFFICE BOX 482 • FORT WORTH, TEXAS 76101

CUSTOMER FEEDBACK

RETURN VIA FAX TO PRODUCT SUPPORT ENGINEERING (450) 433-0272

Manual Title: _____

Manual Number (if assigned): _____

Date of Issue: _____

Date of Last Revision: _____

Section, Chapter, Paragraph Affected: _____

Your Feedback: _____

_____

_____

_____

Now Reads: _____

_____

_____

_____

Should Read: _____

_____

_____

_____

_____

Your Name: _____

Address: _____

_____

Position: _____ **Telephone No.:** _____

Company: _____ **Fax No.:** _____

Reference No. (your initials and date): _____

(If you choose to mail this form, fold in thirds with address exposed, tape and mail.)

ICN-BHT-A-000000-A-97499-00002-F-002-01

Figure 1. Customer feedback (Sheet 1 of 2)

POST OFFICE BOX 482 • FORT WORTH, TEXAS 76101

TAPE HERE

From _____

_____

_____

POSTAGE NECESSARY

Product Support Engineering
12,800 rue de l'Avenir
Mirabel, Québec, Canada, J7J 1R4

FOLD ON DOTTED LINES AND TAPE

TAPE HERE

ICN-BHT-A-000000-A-97499-00003-F-002-01

Figure 1. Customer feedback (Sheet 2 of 2)

POST OFFICE BOX 482 • FORT WORTH, TEXAS 76101

IMPORTANT

HELICOPTER SALES NOTICE

Please complete this form and return by mail, e-mail (publications@bh.com), or fax (817-280-6466, Attention: CPDC). This will ensure that the new owners/operators receive updates to their ***Bell Helicopter Textron Technical Manuals*** and ***Bulletins.***

Model of Helicopter Sold or Purchased _____

Serial and Registration Number _____

Name of ***New Owner*** (company or individual) _____

Name of ***New Operator*** _____

Future Publications to be mailed to this address:

Address _____

City _____

State/Province _____

Zip/Postal Code _____

Country _____

Fax No. _____ Telephone No. _____

E-mail Address _____

Register for access to electronic publications at www.bellhelicopter.net

ICN-BHT-A-000000-A-97499-00004-F-001-01

Figure 2. Sales notice (Sheet 1 of 2)

POST OFFICE BOX 482 • FORT WORTH, TEXAS 76101

TAPE HERE

From _____

NO POSTAGE NECESSARY IF MAILED IN THE UNITED STATES

BUSINESS REPLY MAIL

FIRST CLASS PERMIT NO. 1744 FORT WORTH, TEXAS

COMMERCIAL PUBLICATION DISTRIBUTION CENTER
P.O. BOX 482
FORT WORTH, TEXAS 76101-0482

FOLD ON DOTTED LINES AND TAPE

TAPE HERE

ICN-BHT-A-000000-A-97499-00005-F-002-01

Figure 2. Sales notice (Sheet 2 of 2)

POST OFFICE BOX 482 • FORT WORTH, TEXAS 76101

SPARE PARTS WARRANTY

WARRANTY: Seller warrants each new helicopter part or helicopter part reconditioned by Seller to be free from defect in material and workmanship under normal use and service and if installed on Bell model helicopters for up to 1000 hours of operation, one (1) year from date of installation, or two (2) years from date of shipment by Seller, whichever occurs first. Seller assigns each manufacturer's warranty to Buyer to the extent such manufacturer's warranty exists and is assignable.

Parts, components and assemblies of all helicopter parts may have been restored or reworked due to mars, blemishes, dents or other irregularities during the manufacturing process. Such restoration and/or rework are permitted under Seller's approved manufacturing and engineering processes and guidelines. The restoration and/or rework so completed do not render such items defective in material or workmanship.

Seller's sole obligation under this warranty is limited to the repair or replacement of parts which are determined to Seller's reasonable satisfaction to have been defective within the applicable warranty period as described above. Replacement of parts may be either new or reconditioned at Seller's election and at the lowest allowable maintenance level contained in Seller's manuals, service bulletins or applicable supplier manuals. Seller shall also reimburse reasonable freight charges, excluding insurance, customs fees, duties, handling fees, and taxes. Seller shall not reimburse Buyer for any parts repaired or replaced outside of the Seller's Warranty Claims Process unless express prior written authorization is granted by Seller's Warranty Department to Buyer for such repair or replacement.

NO FAULT FOUND: In the event Seller determines, after evaluation of a returned part, that a defect does not exist, then Buyer shall pay all expenses incurred by Seller related to the return including, but not limited to, costs incurred in shipping and evaluating the part and cost for any replacement part and restocking of the part. In addition, Seller shall not reimburse Buyer for any costs related to the removal or reinstallation of such a part.

WARRANTY CLAIM PROCESS: Defective parts must be reported in writing to the Seller's Warranty Administration within fourteen (14) days of being found defective. Parts may be repaired or replaced with new or reconditioned parts, at Seller's election. Warranty adjustment is contingent upon the Buyer complying with the Seller's Warranty Process as described in the Bell Helicopter VISTA Customer Portal and with the Seller's Warranty Administration disposition instructions for defective parts. Failure to properly comply with Seller's Warranty Process may, at Seller's sole option, void Seller's warranty as to the allegedly defective part.

RETURN SHIPMENT: Parts returned to Seller will be eligible for remedy under this warranty only if the part is carefully packed by the Buyer for the return shipment. Damage occurring to a part due to improper packaging may result in the denial of a warranty claim. In the event that Seller determines a returned part to be damaged or unsalvageable due to improper packaging, the Buyer will be billed repair or replacement cost incurred by Seller. The party initiating shipment bears the risk of loss or damage to parts in transit.

ICN-BHT-A-000000-A-97499-00006-F-002-01

Figure 3. Warranty (Sheet 1 of 3)

POST OFFICE BOX 482 • FORT WORTH, TEXAS 76101

CORE RETURNS: Any core removed by Buyer for which Seller has furnished a replacement part through the Warranty Process shall be shipped by Buyer, with all historical service records, to a facility designated by Seller, within fourteen (14) days of receipt by Buyer of the replacement part. Buyer shall provide Seller with proof of shipment within fourteen (14) days following receipt of the replacement part. In the event that Buyer fails to provide Seller with such proof of shipment within the fourteen (14) days or fails to provide the applicable historical service records, Buyer shall be charged the invoiced value of the replacement part.

WARRANTY AND LIABILITY DISCLAIMERS AND EXCLUSIONS: THIS WARRANTY IS GIVEN AND ACCEPTED IN PLACE OF (i) ALL OTHER WARRANTIES OR CONDITIONS, EXPRESS OR IMPLIED, INCLUDING BUT NOT LIMITED TO THE IMPLIED WARRANTIES OR CONDITIONS OF MERCHANTABILITY OR FITNESS FOR A PARTICULAR PURPOSE AND (ii) ANY OBLIGATION, LIABILITY, RIGHT, CLAIM OR REMEDY IN CONTRACT OR IN TORT, INCLUDING PRODUCT LIABILITIES BASED UPON STRICT LIABILITY, NEGLIGENCE, OR IMPLIED WARRANTY IN LAW.

This warranty is the only warranty made by Seller. The Buyer's sole remedy for a breach of this warranty or any defect in a part is the repair or replacement of the helicopter part and reimbursement of reasonable freight charges. Seller excludes liability, whether as a result of a breach of contract or warranty, negligence or strict product liability, for incidental or consequential damages, including without limitation, damage to the helicopter or other property, costs and expenses resulting from required changes or modifications to helicopter components and assemblies, changes in retirement lives and overhaul periods, local customs fees and taxes, and costs or expenses for commercial losses or lost profits due to loss of use or grounding of helicopters or otherwise.

Seller makes no warranty and disclaims all liability in contract or in tort, including, without limitation, negligence and strict tort liability, with respect to work performed by third parties at Buyer's request and with respect to engines, engine accessories, batteries, radios, and avionics.

Seller makes no warranty and disclaims all liability with respect to components or parts damaged by, or worn due to, normal wear and tear, erosion or corrosion. Seller makes no warranty and disclaims all liability for consumables which are defined as items required for normal and routine maintenance or replaced at scheduled intervals shorter than the warranty period. "Consumables" include but are not limited to engine and hydraulic oil, oil filters, packings and o-rings, anti-corrosion and/or sealing compounds, brush plating material, nuts, bolts, washers, screws, fluids, compounds, and standard aircraft hardware that is readily available to aircraft operators from sources other than Seller.

This warranty shall not apply to any helicopter part which has been repaired or altered outside Seller's factory in any way so as, in Seller's sole judgment, to affect its stability, safety or reliability. This warranty shall not apply to any helicopter part which has been subject to misuse, negligence or accident, or which has been installed in any aircraft which has been destroyed. Repairs and alterations which use or incorporate parts and components other than genuine Bell parts or parts approved by Bell for direct acquisition from sources other than Bell itself are not warranted by Bell, and this warranty shall be void to the extent that such repairs and alterations,

ICN-BHT-A-000000-A-97499-00121-D-001-01

Figure 3. Warranty (Sheet 2 of 3)

POST OFFICE BOX 482 • FORT WORTH, TEXAS 76101

in Seller's sole judgment, affect the stability, safety or reliability of the helicopter or any part thereof, or damage genuine Bell or Bell-approved parts. No person, corporation or organization, including Bell Authorized Customer Service Facilities, is authorized by Seller to assume for it any other liability in connection with the sale of its helicopters and parts.

NO STATEMENT, WHETHER WRITTEN OR ORAL, MADE BY ANY PERSON, CORPORATION OR ORGANIZATION, INCLUDING BELL AUTHORIZED CUSTOMER SERVICE FACILITIES, MAY BE TAKEN AS A WARRANTY NOR WILL IT BIND SELLER.

CHOICE OF LAW AND JURISDICTION: This warranty shall be interpreted under and governed by the laws of the State of Texas. All legal actions based upon claims or disputes pertaining to or involving this warranty including, but not limited to, Seller's denial of any claim or portion thereof under this warranty, must be filed in the courts of general jurisdiction of Tarrant County, Texas or in the United States District Court for the Northern District of Texas, Ft. Worth Division located in Ft. Worth, Tarrant County, Texas. In the event that Buyer files such an action in either of the court systems identified above, and a final judgment in Seller's favor is rendered by such court, then Buyer shall indemnify Seller for all costs, expenses and attorneys' fees incurred by Seller in defense of such claims. In the event Buyer files such a legal action in a court other than those specified, and Seller successfully obtains dismissal of that action or transfer thereof to the above described court systems, then Buyer shall indemnify Seller for all costs, expenses and attorneys' fees incurred by Seller in obtaining such dismissal or transfer.

ICN-BHT-A-000000-A-97499-00122-D-001-01

Figure 3. Warranty (Sheet 3 of 3)

POST OFFICE BOX 482 • FORT WORTH, TEXAS 76101

HELP

HELP

H ELP

E VALUATE

L OGISTICS

P UBLICATIONS

Have you found something wrong with this manual — an error, an inconsistency, unclear instructions, etc.? Although we strive for accuracy and clarity, we may make errors on occasion. If we do and you discover it, we would appreciate your telling us about it so that we can change whatever is incorrect or unclear. Please be as specific as possible.

Your complaint or suggestion will be acknowledged and we will tell you what we intend to do.

You may use the enclosed Customer Feedback form, as applicable, to inform us where we have erred.

Your assistance is sincerely appreciated.

ICN-BHT-A-000000-A-97499-00007-F-001-01

Figure 4. HELP page (Sheet 1 of 1)

POST OFFICE BOX 482 • FORT WORTH, TEXAS 76101

Use of a S1000D publication - Introduction

1. Use of a S1000D publication - General information

1.1. Document structure

The breakdown of the helicopter into systems within the manuals is done under the S1000D specification (S1000D-I9005-01000-00, Issue No. 4.0,4, may 12, 2009).

This publication is written in Simplified English and obeys the instructions given in document (ASD-STE100, Issue 6, January 2013). The European Association of Aerospace Industries (ASD) prepared these documents.

All the data are included in data modules. A code identifies each data module.

1.1.1. Data Module Code (DMC)

The Data Module Code (DMC) structure is shown in Table 1.

Table 1. DMC structure

505	A	29-10-01	00A	520A	A
Paragraph 1.1.1.1	Paragraph 1.1.1.2	Paragraph 1.1.1.3	Paragraph 1.1.1.4	Paragraph 1.1.1.5	Paragraph 1.1.1.6

1.1.1.1. Model identification code

The model identification code is 505.

1.1.1.2. System difference code

The system difference code is a letter (letters I and 0 are not used).

This letter identifies two or more sub-systems that can be installed as alternative items because they do the same function.

1.1.1.3. Standard Numbering System (SNS) code

The Standard Numbering System (SNS) code includes three pairs of digits that show:

- The system (e.g., 29, hydraulic power)
- The subsystem and the sub-subsystem (e.g., 10, main hydraulic)

NOTE

When the sub-subsystem code is zero, the two digits show all of the subsystem.

- The component (e.g., 01, hydraulic reservoir filter module)

Table 1 gives a list of the system numbers.

Table 1. Index of systems

System	Title	MPI	MM MMS	FIM FIMS	WDM WDMS	IPC IPCS	FM FMS
00	Product - General	X	X	X	X	X	X
04	Airworthiness limitations	X					
05	Scheduled/unscheduled maintenance	X					
06	Dimensions and areas		X				
07	Lifting, shoring, recovering and transporting		X				
08	Leveling and weighing		X				
09	Handling and maneuvering		X				
10	Parking, mooring, storing and return to service		X				

POST OFFICE BOX 482 • FORT WORTH, TEXAS 76101

Table 1. Index of systems (continued)

System	Title	MPI	MM MMS	FIM FIMS	WDM WDMS	IPC IPCS	FM FMS
11	Placards and markings		X				
12	Servicing		X				
15	Crew information						X
18	Vibration and noise analysis and attenuation		X				
21	Environmental control		X	X	X	X	
23	Communications		X	X	X	X	
24	Electrical power		X	X	X	X	
25	Equipment/furnishings		X	X	X	X	
26	Fire protection		X	X	X	X	
28	Fuel		X	X	X	X	
29	Hydraulic power		X	X	X	X	
30	Ice and rain protection		X	X	X	X	
31	Indicating/recording systems		X	X	X	X	
32	Landing gear		X	X	X	X	
33	Lights		X	X	X	X	
34	Navigation		X	X	X	X	
52	Doors		X	X	X	X	
53	Fuselage		X	X	X	X	
55	Stabilizers		X	X	X	X	
56	Windows		X	X	X	X	
62	Main rotor		X	X	X	X	
63	Main rotor drive		X	X	X	X	
64	Tail rotor		X	X	X	X	
65	Tail rotor drive		X	X	X	X	
67	Rotor flight controls		X	X	X	X	
71	Power plant		X	X	X	X	
74	Ignition		X	X	X	X	
75	Air		X	X	X	X	
76	Engine controls		X	X	X	X	
78	Exhaust		X	X	X	X	
79	Oil		X	X	X	X	
91	Wiring data				X	X	

1.1.1.4. Disassembly code and disassembly code variant

1.1.1.4.1. Disassembly code

The disassembly code is a two-digit code.

The disassembly code shows the breakdown of a component, as follows:

- 00 - Data module for all of the helicopter, system, subsystem, or component.
- 01 - Data module for the first assembly that you remove from the component.
- 02 - Data module for the second assembly that you remove from the component.

Code 03 and the subsequent codes refer to the third, fourth, etc assembly that you remove from the component.

The disassembly code also identifies the data modules in sequence.

1.1.1.4.2. Disassembly code variant

The disassembly code variant is a letter (letters I and 0 are not used) that identifies alternative items.

These items are different, but the difference is too small to cause a change in the system difference code.

1.1.1.5. Information code and information code variant

1.1.1.5.1. Information code

The information code is a three-digit code.

The information code identifies the types of information you can find in the data module.

The primary information codes used in this publication are written in Table 1.

Table 1. Primary information codes

Code	Definition
OXX	Function, data for plans and description
1XX	Operation
2XX	Servicing
3XX	Examinations, tests and checks
4XX	Fault reports and isolation procedures
5XX	Disconnect, remove and disassemble procedures
6XX	Repairs and locally make procedures and data
7XX	Assemble, install and connect procedure
8XX	Storage procedures and data
9XX	Miscellaneous

1.1.1.5.2. Information code variant

The information code variant is a letter (letters I and 0 are not used).

The information code variant is used for different data modules that are applicable to the same component and type of operation.

1.1.1.6. Item location code

You can find these item location codes:
- A on the helicopter.
- B on the removed assembly/component.
- D applicable to all the locations.

The letter K is used as the item location code for the identification of the data modules applicable to:
- Optional installations
- Optional systems
- Optional equipment

1.1.2. List of Effective Data Modules (LOEDM)

Each chapter includes a List of Effective Data Modules (LOEDM) . The list shows the data module codes of all the data modules in the chapter.

The LOEDM gives the information that follows for each data module:
- Technical name and information name columns. These two columns together give the title of the data module.
- Document identifier column. This column gives the data module code.
- The status of the data module. This column gives the information about the status of the data module (N for new and C for changed).

- Issue date. This column gives the date of the data module changes.
- Applicability column. This column gives information about the applicability of the data module to different versions, configurations, and modifications of the helicopter.

1.1.3. Table of Contents (TOC) (PDF version only)

Each chapter includes a Table of Contents (TOC) . The TOC is a list of the titles of the data modules included in the chapter.

The TOC has four columns that give the information that follows:

- Title of the data module
- Paragraph number
- Page number

POST OFFICE BOX 482 • FORT WORTH, TEXAS 76101

Maintenance planning information - Lists of terms

1. Glossary of terms

Airworthiness Limitations	A section of the Instructions for Continued Airworthiness (ICA) that contains each mandatory replacement time, inspection interval, and related inspection task (BHT-505-MM-1, Chapter 4). The information contained in the Airworthiness Limitations section may be changed to reflect service and/or test experience or new analysis methods.
Calendar Time	The elapsed time applicable to a specified calendar interval. The elapsed time starts on the day the inspection is completed, the component is installed, or the rotor is turned for the first time and ends on the day that the time limit expires. For example, if a repetitive inspection task with a calendar time of 1 year is completed on June 10th, the task would need to be subsequently performed on June 10th of the following year. Calendar time is continuous. Calendar time does not stop when removing a component or placing the helicopter in storage, etc..
Condition	The state of an item compared to a known standard.
Damage	A physical deterioration of a component.
Delamination	Structural separation or cracking that occurs at or in the bond plane of a structural element, within a structural assembly, caused by in service accidental damage, environmental effects, and/or cyclic loading.
Disbond	See Delamination.
Discard	The removal from service of an item at a specified life limit or item that has damage that cannot be repaired.
Electrical Wire Interconnection System (EWIS)	An electrical connection between two or more points including the associated termination devices (e.g., connectors, terminal blocks, splices) and the necessary means for its installation and identification. It does not include system components (line replaceable units), relays, lights, etc.
Examine, Visually	Look carefully to determine the condition of a part/component. Find how that condition relates to a specific standard.
Failure	The inability of an item to perform within previously specified limits.
Fault	An identifiable condition in which one element of a redundant system has failed (no longer available) without impact on the required function output of the system. At the system level, a fault is not considered a functional failure.
Flight Time	See Time-in-Service (Flight Time).
Function	The normal characteristic actions of an item.
Functional Check	A quantitative check to determine if one or more functions of an item performs within specified limits.
Functional Failure	Failure of an item to perform its intended function within specified limits.
Inspection	A non-destructive examination of a part, component, or system to verify its conformity to a specific standard.
Inspection, Detailed	An intensive examination of a specific item, installation, or assembly to detect damage, failure, or irregularity. Available lighting is normally supplemented with a direct source of good lighting at an intensity deemed appropriate. Inspection aids such as mirrors, magnifying lenses, etc. may be necessary. Surface cleaning and elaborate access procedures may be required.
Inspection, General Visual	A visual examination of an interior or exterior area, installation, or assembly to detect obvious damage, failure, or irregularity. This level of inspection is made from within touching distance, unless otherwise specified. A mirror may be necessary to enhance visual access to all exposed surfaces in the inspection area. This level of inspection is made under normal available lighting conditions such as daylight, hangar lighting, flashlight, or drop-light and may require removal or opening of access panels or doors. Stands, ladders, or platforms may be required to gain proximity to the area being checked.

Inspection, Special Detailed	An intensive examination of a specific item, installation, or assembly to detect damage, failure, or irregularity. The examination is likely to make extensive use of specialized inspection techniques and/or equipment. Intricate cleaning and substantial access or disassembly procedures may be required.
Inspection, Zonal	A collective term comprising selected general visual inspections and visual checks that is applied to each zone, defined by access and area, to check system and power plant installations and structure for security and general condition.
Inspection, Non-scheduled	An inspection that is not part of a schedule.
Inspection, Opportunity	An inspection that is performed in conjunction with another scheduled inspection or maintenance task, while in the same area or zone.
Interval, Initial	Interval between the start of service-life and the first task accomplishment.
Interval, Repeat	The interval (after the initial interval) between successive accomplishments of a specific maintenance task.
Item	Any level of hardware assembly (e.g., system, subsystem, module, accessory, component, unit, part, etc.).
Lubrication	See Servicing.
Maintenance	The servicing and/or the repair of a helicopter, a system, or a component to maintain its serviceability.
Maintenance, Preventive	To do small maintenance action(s) on a regular basis to prevent non-scheduled maintenance.
Maintenance Significant Item (MSI)	Items identified by the manufacturer whose failure: 1. could affect safety (on ground or in flight), and/or 2. is undetectable during operations, and/or 3. could have significant operational impact, and/or 4. could have significant economic impact.
Operating Time	Actual flight time or calendar time that must be recorded in the Historical Service Records (HSR) or in the helicopter logs. The operating time is specified as Time-in-Service (Flight Time) and/or Calendar Time.
Operational Check	A task to determine that an item is fulfilling its intended purpose. It does not require quantitative tolerances. This is a failure finding task.
Program, Lead-The-Fleet (LTF)	A program used to validate the performance of an approved product improvement or a change to a maintenance interval. The engineering aspects of this change are approved. The program is closely monitored by Bell Helicopter Textron (BHT) in an operational environment with selected operators.
Program, Special	An approved program that may be initiated under certain special conditions to meet specific requirements. The program is clearly defined through a plan and the engineering and maintenance aspects are approved by the regulatory authorities.
Protective Device	Any device or system that has a function to avoid, eliminate, or reduce the consequences of an event or the failure of some other function.
Residual Fuel	The amount of unusable fuel that can be drained.
Retirement Index Number (RIN)	*This is for components sensitive to operational events, such as normal landings, run-on landings, and autorotation landings. This number is based on the fatigue damage that results from these events.*
Safety	Safety shall be considered as adversely affected if the consequences of the failure condition would prevent continued safe flight and landing of the helicopter and/or might cause serious or fatal injury to human occupants.
Scale Reading	The value recorded directly by a scale before subtracting the tare weight.
Security	The presence of attaching parts that are properly tightened or appear to be, and the presence of properly installed (as required) locking devices such as lockwire, cotter pins, or other.
Servicing	Any act of lubricating or servicing for the purpose of maintaining inherent design capabilities.

POST OFFICE BOX 482 • FORT WORTH, TEXAS 76101

Standard	A specified rule, reference, or measure that you use to determine the condition of a component.
Time-in-Service (Flight Time)	The measured time that starts the moment the helicopter leaves the ground and continues until it touches the ground at the next point of landing. The time when the helicopter is on the ground, with the engine and the rotor turning, is not included.
Torque Event	A significant change in power setting. The types of power setting changes are as follows: - A Ground-Air-Ground (GAG) event (i.e., one takeoff plus the subsequent landing) - A load lift, such as a cargo hook lift operation, a water bucket lift operation, or an airborne replenishment of fixed internal or external reservoirs
Zone	A limited area of the helicopter that may contain more than one system or component, whether related or not. A zone includes all of the structural assemblies, mechanical assemblies, mechanical systems, and Electrical Wire Interconnection Systems (EWIS) contained within the zone limits (BHT-505-MM-1, Chapter 6).

POST OFFICE BOX 482 • FORT WORTH, TEXAS 76101

Intentionally blank page

POST OFFICE BOX 482 • FORT WORTH, TEXAS 76101

CHAPTER 4
AIRWORTHINESS LIMITATIONS SCHEDULE

MAINTENANCE PLANNING INFORMATION

POST OFFICE BOX 482 • FORT WORTH, TEXAS 76101

Intentionally blank page

POST OFFICE BOX 482 • FORT WORTH, TEXAS 76101

List of Effective Data Modules

The listed documents are included in issue 023, dated 2024-10-21, of this publication.

C = Changed data module, N = New data module

Document title	Data module code / Seq number	Issue date	Applicable to
Airworthiness limitations schedule - Approval	DMC-505-A-04-00-00-00A-023A-A / 00008	2016-12-19	ALL
Airworthiness limitations schedule - Log of TC approved revisions	DMC-505-A-04-00-00-00B-023A-A / 00009	2024-03-22	ALL
Airworthiness limitations schedule - Introduction	DMC-505-A-04-00-00-00A-018A-A / 00010	2024-03-22	ALL
Certification maintenance requirements - Introduction	DMC-505-A-04-00-01-00A-018A-A / 00011	2017-05-18	ALL

POST OFFICE BOX 482 • FORT WORTH, TEXAS 76101

Intentionally blank page

POST OFFICE BOX 482 • FORT WORTH, TEXAS 76101

Airworthiness limitations schedule - Approval

The Airworthiness Limitations Schedule is approved by the Minister and specifies the maintenance required by any applicable airworthiness or operational rules unless an alternative program has been approved by the Minister.

19/Dec/2016

Chief Engineering
National Aircraft Certification
Transport Canada

POST OFFICE BOX 482 • FORT WORTH, TEXAS 76101

Intentionally blank page

POST OFFICE BOX 482 • FORT WORTH, TEXAS 76101

Airworthiness limitations schedule - Log of TC approved revisions

ISSUE NUMBER	DATE OF SIGNATURE	TC SIGNATURE
ISSUE 001	19 DEC 2016	
ISSUE 002	03 FEB 2017	A/AARDD 3 Feb 2017
ISSUE 003	18 MAY 2017	A/AARDD 18 May 2017
ISSUE 004	5 DEC 2017	A/AARDD 5 Dec 2017
ISSUE 005	9 APR 2018	AARDD 9 Apr 2018
ISSUE 006	24 MAY 2018	AARDD 24 May 2018
ISSUE 007	11 FEB 2019	AARDD 11 Feb 2019
ISSUE 008	25 JUN 2019	Acting AARDD 25 June 2019 ROY DWAHLWAY
ISSUE 009	12 MAR 2021	AARDD 12 March 2021
ISSUE 010	11 AUG 2021	A/Chief of Engineering DocuSigned by: Michel Lopez C9358B25C4794F6...
ISSUE 011	20 MAR 2024	DocuSigned by: March 20, 2024 C5962CA6FFA74B6...

POST OFFICE BOX 482 • FORT WORTH, TEXAS 76101

Intentionally blank page

POST OFFICE BOX 482 • FORT WORTH, TEXAS 76101

Airworthiness limitations schedule - Introduction

1. Airworthiness limitations schedule

WARNING

ALL REPAIR AND OVERHAUL PROCEDURE LIVES PUBLISHED BY BELL, INCLUDING COMPONENT RETIREMENT LIFE, ARE BASED SOLELY ON THE USE OF BELL APPROVED PARTS AND PROCESSES. IF PARTS OR PROCESSES DEVELOPED OR APPROVED BY PARTIES OTHER THAN BELL ARE USED, THEN THE DATA PUBLISHED OR OTHERWISE SUPPLIED BY BELL ARE NOT APPLICABLE. THE USER IS WARNED TO NOT RELY ON BELL DATA FOR PARTS AND PROCESSES NOT APPROVED BY BELL. YOU MUST GET ALL APPLICABLE INSPECTIONS AND REPAIR METHODS FROM THE SUPPLIER OF THE PARTS OR PROCESSES NOT APPROVED BY BELL. BELL IS NOT RESPONSIBLE FOR PARTS OR PROCESSES OTHER THAN THOSE WHICH IT HAS ITSELF DEVELOPED OR APPROVED.

WARNING

CONTINUED USE OF ANY TIME/CALENDAR/RIN LIFE LIMITED COMPONENT PAST ITS STATED LIMITS IS NOT PERMITTED AS IT COULD SERIOUSLY AFFECT THE AIRWORTHINESS OF THE HELICOPTER.

THE COMPONENT MUST BE REMOVED FROM THE HELICOPTER NOT LATER THAN THE END OF THE LIFE LIMIT. IT MUST EITHER BE MADE UNSERVICEABLE OR MARKED IN A CONSPICUOUS MANNER TO PREVENT CONTINUED USE, EVEN INADVERTENT USE.

WHEN A REPLACEMENT PART IS INSTALLED, THE PART NAME, PART NUMBER, SERIAL NUMBER, AND CURRENT OPERATING HOURS, IF APPLICABLE, MUST BE RECORDED IN THE HISTORICAL SERVICE RECORD FOR THE ASSEMBLY OR HELICOPTER.

NOTE

The requirements stated in Chapter 5 are to be complied with and the appropriate maintenance actions are to be performed.

NOTE

The airworthiness life or inspection interval for any part number contained in this schedule applies to all the successive dash numbers for that component unless it is otherwise specified.

The mandatory Airworthiness Limitation Schedule (Table 1) summarizes the mandatory maximum life, in hours, years or by Retirement Index Number (RIN) of components with a limited airworthiness life. Parts that are not on the schedule have an unlimited airworthiness life.

Refer to the engine manufacturer's publications for the airworthiness limitations of the power plant components.

WARNING

SOME PARTS ARE INSTALLED AS ORIGINAL EQUIPMENT ON BOTH MILITARY AND COMMERCIAL HELICOPTERS AND MAY HAVE A LOWER AIRWORTHINESS LIFE AND/OR OVERHAUL SCHEDULE WHEN USED ON A MILITARY HELICOPTER. IN ADDITION, CIRCUMSTANCES SURROUNDING THEIR USE MAY CALL FOR OPERATION OF THE MILITARY HELICOPTER OUTSIDE OF THE APPROVED COMMERCIAL FLIGHT ENVELOPE. CONSEQUENTLY, PARTS THAT HAVE BEEN USED ON MILITARY HELICOPTERS SHOULD NOT BE USED ON COMMERCIAL HELICOPTERS.

CAUTION

AIRWORTHINESS LIFE OF SOME KIT COMPONENTS IS NOT COVERED IN THIS SCHEDULE. REFER TO APPLICABLE SERVICE INSTRUCTION (SI) OR MAINTENANCE MANUAL SUPPLEMENT (MMS) FOR KIT COMPONENT SCHEDULES.

NOTE

The retirement life given, or the failure to give a retirement life to a component, does not constitute a warranty of any kind. The only warranty applicable to the helicopter or any component is the warranty included in the Purchase Agreement for the helicopter or the component.

POST OFFICE BOX 482 • FORT WORTH, TEXAS 76101

The airworthiness lives given to the components and assemblies are determined by experience, tests, and the judgment of Bell engineers. The lives cannot be changed without the approval of the Minister of Transport Canada.

NOTE

It is the responsibility of the pilot to record the events in the helicopter log book. Normal landings, run-on landings, autorotation landings, landings following simulated engine failure in a hover of five feet or less, takeoffs, and external load lifts are events that must be recorded separately. It is the responsibility of the maintainer to assign RIN values to the recorded events, for the purpose of tracking the component lives.

Components sensitive to operational events, such as normal landings, run-on landings, autorotation landings, takeoffs, and external load lifts are assigned a maximum RIN. This number is based on the fatigue damage that results from these events. A new component begins with an accumulated RIN of zero and will increase as the helicopter is subject to events. The operator must record the number of events and increase the accumulated RIN as follows:

- For every event described in Table 1, increase the accumulated RIN for the component by the applicable factor given in Table 1.
- Example: if a pilot performs one normal landing and one run-on landing, he must record one occurrence of each event. Then the maintainer must increase the accumulated RIN for each affected component by the factor applicable to the component.

When a component reaches the maximum RIN indicated in Table 1, the component must be retired from service.

Prior to disposing of unsalvageable helicopter parts and materials, caution should be exercised to ensure that the parts and material are disposed of in a manner that does not allow them to be returned for service. Refer to FAA Advisory Circular 21-38 for guidance on the disposal of unsalvageable aircraft parts and materials.

Table 1. Airworthiness Limitations Schedule

Component	Part Number (1)	Airworthiness Life
MAIN ROTOR		
Main Rotor Blade	206-015-001-119	4000 hours
Main Rotor Grip	206-011-132-113	4800 hours
Latch Bolt	206-011-260-101	1200 hours
Main Rotor Retention Strap	206-310-004-103	1200 hours or 48 months (2)
Retention Strap Fitting	SLS-010-150-101	2400 hours
Retention Strap Pin	206-011-125-001	1200 hours
Main Rotor Trunnion	206-011-120-105	24000 RIN (3)
MAIN ROTOR CONTROLS		
Collective Lever	206-010-447-109	14400 hours
Collective Idler Link	206-010-446-107	14400 hours
Collective Sleeve Assembly	206-010-454-113	14400 hours
Swashplate Support Assembly	206-010-445-113	14400 hours
Pilot Collective Stick Tube	M207-20M301-043	6250 hours
TAIL ROTOR AND CONTROLS		
Tail Rotor Blade	206-016-201-135	2500 hours
Tail Rotor Yoke Assembly	206-011-819-109	5000 hours
DRIVE SYSTEM		
Tail Rotor Gearbox Duplex Bearing	206-040-410-101	3000 hours
Main Rotor Mast	206-040-535-109	*5500 hours OR 44000 RIN* (4)
HYDRAULIC SYSTEM		
Hydraulic Pump	M206-20H030-041	500 hours
Hydraulic Pump	M206-20H030-043	2000 hours

POST OFFICE BOX 482 • FORT WORTH, TEXAS 76101

Table 1. Airworthiness Limitations Schedule (continued)

Component	Part Number (1)	Airworthiness Life
PYLON SUPPORT STRUCTURE		
LIVE Mount Assembly, Left	SLS-010-200-103	3000 hours OR 20000 RIN (12)
LIVE Mount Assembly, Right	SLS-010-200-104	3000 hours OR 20000 RIN (12)
LIVE Mount Isolator Assembly, Left	SLS-010-210-101	3000 hours OR 20000 RIN (12)
LIVE Mount Isolator Assembly, Right	SLS-010-210-102	3000 hours OR 20000 RIN (12)
LIVE Mount, Arm A Assembly	SLS-010-220-101	3000 hours OR 20000 RIN (12)
LIVE Mount, Arm B Assembly	SLS-010-220-102	3000 hours OR 20000 RIN (12)
LIVE Mount Bridge Adapter Assembly	SLS-010-250-101	3000 hours OR 20000 RIN (12)
LIVE Mount Bridge Cap	SLS-010-251-101	3000 hours OR 20000 RIN (12)
AIRFRAME		
Horizontal Stabilizer	SLS-030-705-003	22000 hours
Horizontal Stabilizer Fitting, Forward	SLS-030-608-101	22000 hours
Horizontal Stabilizer Fitting, Aft	SLS-030-608-103	22000 hours
Bolt, Horizontal Stabilizer Assembly (Qty 4)	20-057-5-16 or 20-057-5-16D	12000 hours
Bolt, Tailcone Attachment (Qty 4)	20-057C8-32D	3000 hours
Tailcone Assembly	SLS-030-600-003	14000 hours
Mechanical truss	SLS-030-056-015	3000 hours
Keel Beam, Left	SLS-030-201-101	UNL
Keel Beam, Right	SLS-030-201-103	UNL
Vertical Beam, Left	SLS-030-302-101	UNL
Vertical Beam, Right	SLS-030-302-102	UNL
LANDING GEAR		
Forward Crosstube Assembly	SLS-030-820-001	2500 RIN (5)
Forward Crosstube Assembly	SLS-030-820-005	22000 RIN (9)
Aft Crosstube Assembly	SLS-030-830-001	2500 RIN (6)
Aft Crosstube Assembly	SLS-030-830-003	6500 RIN (10)
Skid Tube Assembly	SLS-030-810-003	6000 RIN (7)
Skid Tube Assembly	SLS-030-810-005	6500 RIN (11)
KITS		
Emergency Locator Transmitter	505-014-001	See Note (8)

1 Airworthiness limitation for part number listed applies to all successive dash numbers for that component unless otherwise specified.

2 Main rotor hub tension torsion straps 206-310-004 have an airworthiness life of 1200 hours or 48 months, whichever occurs first. The calendar life of 48 months starts when new straps are installed in a main rotor hub and blade assembly, and are subjected to rotation on the helicopter.

3 Retire the 206-011-120-105 main rotor trunnion when the RIN = 24000. For each takeoff/lift, add two to the RIN total.

4 Retire the 206-040-535-109 main rotor mast when the total time equals the retirement life or when the RIN = 44000 whichever occurs first. For each takeoff/lift, add two to the RIN total.

POST OFFICE BOX 482 • FORT WORTH, TEXAS 76101

Table 1. Airworthiness Limitations Schedule (continued)

	Component	Part Number (1)	Airworthiness Life
5	Retire the SLS-030-820-001 forward crosstube assembly when the accumulated RIN = 2500 (RIN LIFE). Increase the RIN by one for each normal landing. For each run-on landing, autorotation landing or landing following a simulated engine failure in a hover of five feet or less, increase the RIN count by 24.		
6	Retire the SLS-030-830-001 aft crosstube assembly when the accumulated RIN = 2500 (RIN LIFE). Increase the RIN by one for each normal landing. For each run-on landing, autorotation landing or landing following a simulated engine failure in a hover of five feet or less, increase the RIN count by 24.		
7	Retire the SLS-030-810-003 skid tube assembly when the accumulated RIN = 6000 (RIN LIFE). Increase the RIN by one for each normal landing. For each run-on landing, autorotation landing or landing following a simulated engine failure in a hover of five feet or less, increase the RIN count by 56.		
8	ELT kit must be updated to 505-014-003 prior to July 31, 2018.		
9	Retire the SLS-030-820-005 forward crosstube assembly when the accumulated RIN = 22000 (RIN LIFE). Increase the RIN by one for each normal landing or landing following a simulated engine failure in a hover of five feet or less. For each run-on landing, increase the RIN count by four. For each autorotation landing, increase the RIN count by 10.		
10	Retire the SLS-030-830-003 aft crosstube assembly when the accumulated RIN = 6500 (RIN LIFE). Increase the RIN by one for each normal landing, run-on landing, autorotation landing or landing following a simulated engine failure in a hover of five feet or less.		
11	Retire the SLS-030-810-005 skid tube assembly when the accumulated RIN = 6500 (RIN LIFE). Increase the RIN by one for each normal landing, run-on landing, or landing following a simulated engine failure in a hover of five feet or less. For each autorotation landing, increase the RIN count by three.		
12	Retire the component when the total time equals the retirement life or when the accumulated RIN = 20000 (RIN LIFE), whichever occurs first. For each external load lift, add one to the RIN total.		

POST OFFICE BOX 482 • FORT WORTH, TEXAS 76101

Certification maintenance requirements - Introduction

1. *Certification maintenance requirements*

The Certification Maintenance Requirements (Table 1) summarizes the mandatory scheduled maintenance tasks to detect safety-significant latent failures.

Table 1. *Certification maintenance requirements*

Component	*Part number* (1)	*Interval*
	KIT	
Rotor brake kit	*SLS-706-002-101*	*800 hours* (2)

1 *The certification maintenance requirements for part number listed applies to all successive dash numbers for that component unless otherwise specified.*

2 *Do a functional check of the rotor brake caliper switch assemblies (BHT-505-MM-1, Chapter 63).*

POST OFFICE BOX 482 • FORT WORTH, TEXAS 76101

Intentionally blank page

POST OFFICE BOX 482 • FORT WORTH, TEXAS 76101

CHAPTER 5
SCHEDULED/UNSCHEDULED MAINTENANCE

MAINTENANCE PLANNING INFORMATION

POST OFFICE BOX 482 • FORT WORTH, TEXAS 76101

Intentionally blank page

POST OFFICE BOX 482 • FORT WORTH, TEXAS 76101

List of Effective Data Modules

The listed documents are included in issue 023, dated 2024-10-21, of this publication.

C = Changed data module, N = New data module

Document title	Data module code / Seq number		Issue date	Applicable to
Scheduled/unscheduled maintenance - Introduction	DMC-505-A-05-00-00-00A-018A-A / 00013		2023-11-09	ALL
Appendix A - M505 Inspection Checklist	DMC-505-A-05-00-00-00A-280A-A / 00014		2020-06-17	ALL
Appendix B - M505 Defect Sheet	DMC-505-A-05-00-00-00A-280A-B / 00015		2020-06-17	ALL
Time limits - Introduction	DMC-505-A-05-10-00-00A-018A-A / 00016		2022-05-23	ALL
Component restoration (overhaul) schedule - Introduction	DMC-505-A-05-11-00-00A-018A-A / 00017		2022-03-28	ALL
Scheduled maintenance checks - Introduction	DMC-505-A-05-40-00-00A-018A-A / 00018	C	2024-10-21	ALL
Scheduled maintenance checks (zonal inspections) - General	DMC-505-A-05-40-00-00A-028A-A / 00019		2016-12-19	ALL
Scheduled zonal restoration (cleaning) - General	DMC-505-A-05-40-00-00A-028B-A / 00020		2016-12-19	ALL
Scheduled maintenance checks (L/HIRF inspections) - General	DMC-505-A-05-40-00-00A-028C-A / 00021		2020-02-03	ALL
50 flight hours/1 year inspection - Function, data for plans and description	DMC-505-A-05-41-00-05A-000A-A / 00022		2020-02-03	ALL
100 flight hours/6 months inspection - Function, data for plans and description	DMC-505-A-05-41-00-10A-000A-A / 00023		2016-12-19	ALL
100 flight hours/1 year inspection - Function, data for plans and description	DMC-505-A-05-41-00-15A-000A-A / 00024		2022-05-23	ALL
100 flight hours/18 months inspection - Function, data for plans and description	DMC-505-A-05-41-00-17A-000A-A / 00025		2020-02-03	ALL
300 flight hours/1 year inspection - Function, data for plans and description	DMC-505-A-05-41-00-20A-000A-A / 00026		2022-05-05	ALL
400 flight hours/1 year inspection - Function, data for plans and description	DMC-505-A-05-41-00-30A-000A-A / 00027		2016-12-19	ALL
600 flight hours/1 year inspection - Function, data for plans and description	DMC-505-A-05-41-00-35A-000A-A / 00028		2020-11-03	ALL
600 flight hours/2 years inspection - Function, data for plans and description	DMC-505-A-05-41-00-38A-000A-A / 00029		2023-08-16	ALL
600 flight hours/3 years inspection - Function, data for plans and description	DMC-505-A-05-41-00-40A-000A-A / 00030		2020-02-03	ALL
1200 flight hours/2 years inspection - Function, data for plans and description	DMC-505-A-05-41-00-45A-000A-A / 00031		2016-12-19	ALL
2250 flight hours/6 years inspection - Function, data for plans and description	DMC-505-A-05-41-00-55A-000A-A / 00032		2021-08-12	ALL
3000 flight hours/3 years inspection - Function, data for plans and description	DMC-505-A-05-41-00-57A-000A-A / 00033		2018-04-10	ALL
3000 flight hours/6 years inspection - Function, data for plans and description	DMC-505-A-05-41-00-60A-000A-A / 00034		2021-08-12	ALL
5000 flight hours/5 years inspection - Function, data for plans and description	DMC-505-A-05-41-00-70A-000A-A / 00035		2020-02-03	ALL

POST OFFICE BOX 482 • FORT WORTH, TEXAS 76101

Document title	Data module code / Seq number		Issue date	Applicable to
25 flight hours inspection - Function, data for plans and description	DMC-505-A-05-43-00-03A-000A-A / 00036		2019-04-04	ALL
50 flight hours inspection - Function, data for plans and description	DMC-505-A-05-43-00-06A-000A-A / 00037		2017-09-27	ALL
100 flight hours inspection - Function, data for plans and description	DMC-505-A-05-43-00-09A-000A-A / 00038		2020-02-03	ALL
150 flight hours inspection - Function, data for plans and description	DMC-505-A-05-43-00-10A-000A-A / 00039		2023-08-16	ALL
200 flight hours inspection - Function, data for plans and description	DMC-505-A-05-43-00-12A-000A-A / 00040		2022-03-28	ALL
300 flight hours inspection - Function, data for plans and description	DMC-505-A-05-43-00-15A-000A-A / 00041		2022-05-23	ALL
400 flight hours inspection - Function, data for plans and description	DMC-505-A-05-43-00-18A-000A-A / 00042		2020-02-03	ALL
500 flight hours inspection - Function, data for plans and description	DMC-505-A-05-43-00-21A-000A-A / 00043		2021-08-12	ALL
600 flight hours inspection - Function, data for plans and description	DMC-505-A-05-43-00-24A-000A-A / 00044		2021-08-12	ALL
1000 flight hours inspection - Function, data for plans and description	DMC-505-A-05-43-00-26A-000A-A / 00045		2020-02-03	ALL
1200 flight hours inspection - Function, data for plans and description	DMC-505-A-05-43-00-27A-000A-A / 00046		2022-03-28	ALL
1500 flight hours inspection - Function, data for plans and description	DMC-505-A-05-43-00-30A-000A-A / 00047		2022-03-28	ALL
1800 flight hours inspection - Function, data for plans and description	DMC-505-A-05-43-00-33A-000A-A / 00048		2016-12-19	ALL
2000 flight hours inspection - Function, data for plans and description	DMC-505-A-05-43-00-36A-000A-A / 00049		2021-08-12	ALL
2400 flight hours inspection - Function, data for plans and description	DMC-505-A-05-43-00-39A-000A-A / 00050		2016-12-19	ALL
2500 flight hours inspection - Function, data for plans and description	DMC-505-A-05-43-00-42A-000A-A / 00051		2016-12-19	ALL
3000 flight hours inspection - Function, data for plans and description	DMC-505-A-05-43-00-45A-000A-A / 00052		2020-02-03	ALL
4500 flight hours inspection - Function, data for plans and description	DMC-505-A-05-43-00-51A-000A-A / 00053		2016-12-19	ALL
4800 flight hours inspection - Function, data for plans and description	DMC-505-A-05-43-00-54A-000A-A / 00054		2016-12-19	ALL
6000 flight hours inspection - Function, data for plans and description	DMC-505-A-05-43-00-57A-000A-A / 00055		2016-12-19	ALL
30 days inspection - Function, data for plans and description	DMC-505-A-05-45-00-05A-000A-A / 00056		2023-11-09	ALL
1 year inspection - Function, data for plans and description	DMC-505-A-05-45-00-10A-000A-A / 00057		2023-11-09	ALL
2 years inspection - Function, data for plans and description	DMC-505-A-05-45-00-15A-000A-A / 00058		2022-03-28	ALL
3 years inspection - Function, data for plans and description	DMC-505-A-05-45-00-20A-000A-A / 00059	C	2024-10-21	ALL
4 years inspection - Function, data for plans and description	DMC-505-A-05-45-00-25A-000A-A / 00060		2021-08-12	ALL

POST OFFICE BOX 482 • FORT WORTH, TEXAS 76101

Document title	Data module code / Seq number		Issue date	Applicable to
5 years inspection - Function, data for plans and description	DMC-505-A-05-45-00-30A-000A-A / 00061		2021-08-12	ALL
6 years inspection - Function, data for plans and description	DMC-505-A-05-45-00-35A-000A-A / 00062		2021-08-12	ALL
7 years inspection - Function, data for plans and description	DMC-505-A-05-45-00-40A-000A-A / 00063		2021-08-12	ALL
9 years inspection - Function, data for plans and description	DMC-505-A-05-45-00-45A-000A-A / 00064	C	2024-10-21	ALL
10 years inspection - Function, data for plans and description	DMC-505-A-05-45-00-47A-000A-A / 00065		2023-08-16	ALL
12 years inspection - Function, data for plans and description	DMC-505-A-05-45-00-50A-000A-A / 00066		2023-11-09	ALL
15 years inspection - Function, data for plans and description	DMC-505-A-05-45-00-55A-000A-A / 00067		2020-02-03	ALL
1000 landing cycles inspection - Function, data for plans and description	DMC-505-A-05-46-00-05A-000A-A / 00068		2020-02-03	ALL
Inspection at engine oil replacement - Function, data for plans and description	DMC-505-A-05-47-02-05A-000A-A / 00069		2016-12-19	ALL
Torque/friction checks - Introduction	DMC-505-A-05-47-01-00A-018A-A / 00070		2023-08-16	ALL
Inspection at fuel cell removal/replacement - Function, data for plans and description	DMC-505-A-05-47-02-10A-000A-A / 00071		2016-12-19	ALL
Free wheeling unit oil line filter/screens inspection - Function, data for plans and description	DMC-505-A-05-47-02-15A-000A-A / 00072		2016-12-19	ALL
Conditional inspections - Introduction	DMC-505-A-05-50-00-00A-018A-A / 00073		2022-05-05	ALL
Hard landing - Special irregular inspection	DMC-505-A-05-50-01-00B-282A-A / 00074		2022-03-28	ALL
Sudden stoppage (main rotor) power ON or OFF - Special irregular inspection	DMC-505-A-05-50-02-00A-284A-A / 00075		2020-02-03	ALL
Sudden stoppage (tail rotor) power ON or OFF - Special irregular inspection	DMC-505-A-05-50-03-00A-284A-A / 00076		2020-11-03	ALL
Main rotor overspeed - Special irregular inspection	DMC-505-A-05-50-04-00A-284A-A / 00077		2020-02-03	ALL
Overtorque - Special irregular inspection	DMC-505-A-05-50-05-00A-284A-A / 00078		2020-02-03	ALL
Engine compressor stall or surge - Special irregular inspection	DMC-505-A-05-50-06-00A-284A-A / 00079		2023-08-16	ALL
Lightning strike - Special irregular inspection	DMC-505-A-05-50-07-00A-284A-A / 00080		2022-03-28	ALL
Overload - Special irregular inspection	DMC-505-A-05-50-08-00A-284A-A / 00081		2022-03-28	ALL

POST OFFICE BOX 482 • FORT WORTH, TEXAS 76101

Intentionally blank page

POST OFFICE BOX 482 • FORT WORTH, TEXAS 76101

Scheduled/unscheduled maintenance - Introduction

1. Inspections

WARNING

THE MODEL 505 HELICOPTER CONTAINS CRITICAL PARTS. FAILURE OF THESE PARTS DURING GROUND OR FLIGHT OPERATIONS CAN HAVE A CATASTROPHIC EFFECT ON THE HELICOPTER. CARE MUST BE TAKEN DURING MAINTENANCE, INSPECTION, REPAIR, TRANSPORTATION, AND STORAGE OF THE CRITICAL PARTS THAT ARE REMOVED AND INSTALLED.

This chapter gives a component restoration (overhaul) schedule and all of the time limit intervals and requirements for scheduled inspections, scheduled component inspections, special inspections, and conditional inspections applicable to the Model 505 helicopter.

The inspection intervals provided in this chapter are applicable only to Bell Helicopter Textron (BHT) approved parts. The owner/operator is responsible for increasing the scope and frequency of the inspections as necessary to make sure the helicopter is operated safely during all unusual local changes, such as environmental conditions, helicopter use, etc. Contact your local aviation authority to request changes to the requirements in this chapter.

NOTE

The component inspection interval (or the failure to provide an inspection interval for a component) does not constitute a warranty of any kind. The only warranty applicable to the helicopter or any component is the warranty included in the Purchase Agreement for the helicopter or the component.

The inspection intervals have been determined by use of the Maintenance Steering Group – 3rd Task Force (MSG-3) methodology (505-A-05-40-00-00A-018A-A / 00018). Changes to the inspection intervals will also follow the MSG-3 process and will be introduced by a revision to the Maintenance Type Board Report (MTBR) , which will then be incorporated into this chapter. The MTBR is available upon request from Product Support Engineering (PSE) .

Calendar and hourly inspections are thorough visual inspections to determine the airworthiness of the helicopter and its components. Qualified persons must do the inspections in accordance with quality standard aircraft practices and the applicable maintenance manuals. BHT considers that it is mandatory to obey all applicable Alert Service Bulletins (ASB) and Airworthiness Directives (AD) .

Component operating time records are necessary for components that have scheduled maintenance procedures that are different from those of the airframe. It is the responsibility of the owner/operator to update the Historical Service Records (HSR) for the applicable component and to do the necessary maintenance procedures.

For the inspection requirements of installed BHT kits not covered in this chapter, refer to the applicable Installation Instruction (II) .

All of the necessary access panels, covers, doors, cowlings, etc. to be removed or opened for each inspection are provided in this chapter. Refer to:

- BHT-505-MM, Chapter 6, to identify and locate the access panels
- BHT-505-MM, Chapter 52, to identify and locate the doors
- BHT-505-MM, Chapter 53, for the remove and install procedures of the access panels

1.1. Exceptions

This manual does not include intervals for specific inspections such as the compass calibration, etc. These specific inspection intervals are provided by your government regulatory authority. Refer to their requirements for these specific inspections.

1.2. Responsibilities

The owner/operator of the helicopter is responsible for the maintenance done on the helicopter. It is the owner/operator's responsibility to:

1. Establish, maintain, and review the log books for discrepancies.
2. Make sure all of the ASB, AD, and special inspections are completed when required.

NOTE

Refer to the applicable II for the kits not covered in this chapter.

3. Make sure that the scheduled inspections, special inspections, and necessary tests for all of the installed kits are done.

4. Make sure that all parts and components for which HSR are necessary have documented traceability to their original installation in the helicopter.
5. Make sure that all limited life parts that have completed their published operating limits are replaced.
6. Make sure that all components that have completed their published inspection intervals are inspected.

NOTE

The owner/operator may choose to ask the maintenance organization/person doing the maintenance to perform the tasks listed by prior arrangement through a separate formal agreement.

7. Make sure that all of the maintenance required on the helicopter is done by an approved maintenance organization. This maintenance organization/person is responsible for the quality of the maintenance done.

1.3. Crash damage

Because of the many possible combinations that can result from crash damage, it is not possible to include all specific repair tasks in this category. Evaluate the crash damage for each situation and do the repair in accordance with the degree of damage to the specific part or component using the applicable repair procedures in this manual or other applicable manuals. It is recommended to contact Bell Helicopter Textron Product Support Engineering for assistance with crash damage evaluation.

1.4. Types of inspections

Inspection requirements contained in this chapter include scheduled inspections, scheduled component inspections, special inspections, and conditional inspections. These are as follows:

1. Scheduled inspections occur at specified intervals of helicopter operating time. These intervals may be in flight time (hours), landing cycles, torque events (Retirement Index Number (RIN)), calendar time (days, months, years) or other assigned units. This ensures that the helicopter is airworthy.
2. Scheduled component inspections occur at specified intervals of component operating time. When specified intervals are reached, the component must be removed from the helicopter and restored or replaced, as applicable.
3. Special inspections are of a temporary nature (e.g., opportunity inspections, etc.) or occur at special intervals that are not consistent with the scheduled inspections.
4. Conditional inspections do not occur at a specified time. They are conducted based on the result of known or suspected unusual events, known or suspected malfunctions, or defects.

Lubrication and servicing requirements are in addition to those stated in this chapter (BHT-505-MM, Chapter 12).

Inspection requirements included in this chapter are given for corrosion control in normal operating environments. If the helicopter is operated in an area that is conductive to corrosion, refer to the CSSD-PSE-87-001 and the BHT-ALL-SPM, Chapter 3 for additional information on corrosion control guidelines.

For operations of an helicopter outside the normal operating environments (e.g.,highly corrosive environment, crop-dusting, offshore oil rig, exposure to salt, regular exposure to sand storms and dust, regular operations in areas of high humidity and in areas of high temperature based on operating experience and/or exposure to volcanic ashes) each operator need to make their own maintenance plan in keeping with the mission and environment to which each helicopter is subjected.

A corrosion level 1 is:

- Damage that occurs between successive inspections that is within allowable damage limits;

  or
- Damage that occurs between successive inspections that does not require structural reinforcement, replacement, or new damage tolerance based inspections;

  or
- Corrosion that occurs between successive inspections that exceeds allowable limits but can be attributed to an event not typical of operator usage of other aircraft in the same fleet;

  or
- A light corrosion that occur again and again between inspections that eventually requires structural reinforcement, replacement, or new damage tolerance based inspections.

If you find a corrosion that is more than a corrosion level 1, report the corrosion to BHT, via email to productsupport@bellflight.com.

POST OFFICE BOX 482 • FORT WORTH, TEXAS 76101

NOTE

The Turbomeca Maintenance Manual Trouble Shooting (MMTS) (X319 R5 460 2) includes all of the instructions for continued airworthiness for the ARRIUS 2R engine, as installed in the Model 505 helicopter and operated in accordance with the limitations contained in the Flight Manual (BHT-505-FM-1, Section 1).

Scheduled maintenance checks, unscheduled maintenance checks, and time between overhaul for the ARRIUS 2R engine are part of the Maintenance Type Board Report (MTBR) and are incorporated in this chapter.

Inspection requirements for the common optional equipment, approved by BHT, are covered in this chapter. Inspection requirements for all other optional equipment, approved by BHT, are covered in the applicable II.

Inspection requirements for optional equipment approved under Supplement Type Approval/Certificate (STA/STC) are covered in the applicable STA/STC documentation. Maintenance and inspection of these items are the responsibility of the owner/operator.

1.5. *Scheduled Inspections - Interval Tolerance*

WARNING

DO NOT APPLY THESE TOLERANCES TO PARTS WITH A LIMITED AIRWORTHINESS LIFE (505-A-04-00-00-00A-018A-A / 00010).

The Bell approved tolerance for scheduled inspections, special inspections, and overhaul intervals, unless specified, is 10% or up to a maximum of 100 hours operating time/30 days calendar time, whichever is less. The tolerances are established for maintenance scheduling convenience only.

Scheduled inspections, special inspections, or scheduled components inspections required beyond the stated tolerances must be approved by PSE.

The approval of an inspection interval tolerance by a governing aviation authority is the responsibility of the owner/operator. Please contact your governing aviation authority to request a scheduled inspection interval tolerance. The tolerance would be established for maintenance scheduling convenience only. If a tolerance is applied, the subsequent inspection interval will be adjusted to re-establish the original inspection schedule.

When an inspection is completed early, subsequent inspections will be advanced as required to not be more than the scheduled inspection interval. The following supply examples of when an hourly inspection and calendar inspection are completed early.

Table 1. ***Hourly Example:***

200-HOUR INSPECTION DUE AT:	*INSPECTION CARRIED OUT AT:*	*NEXT 200-HOUR INSPECTION DUE AT:*
3400 Hours	*3390 Hours (completed early)*	*3590 Hours*
3590 Hours	*3585 Hours (completed early)*	*3785 Hours*
3785 Hours	*3785 Hours*	*3985 Hours*

Table 2. ***Calendar Example:***

12-MONTH INSPECTION DUE ON:	*INSPECTION CARRIED OUT ON:*	*NEXT 12-MONTH INSPECTION DUE ON:*
June 10, 2010	*June 1, 2010 (completed early)*	*June 1, 2011* (1)
June 1, 2011	*May 15, 2011 (completed early)*	*May 15, 2012* (1)
May 15, 2012	*May 15, 2012*	*May 15, 2013* (1)
NOTE: 1 *The 505 maintains the calendar day that the previous inspection was completed.*		

1.6. *Terminology*

Refer to 505-A-00-71-00-00A-006A-A / 00006 *for definitions of the technical terms used in this chapter.*

POST OFFICE BOX 482 • FORT WORTH, TEXAS 76101

Intentionally blank page

POST OFFICE BOX 482 • FORT WORTH, TEXAS 76101

Appendix A - M505 Inspection Checklist

Table 1. Appendix A

M505 INSPECTION - CHECKLIST
GENERAL
1. Make sure that all of the applicable and the required Scheduled Inspections, Special Inspections, Technical Bulletins, Alert Service Bulletins, and Airworthiness Directives (A.D.) are completed:
2. Make sure that the required inspections and the tests for installed optional equipment are completed:
3. Make sure that the required Special Inspections are completed. Refer to the applicable chapter of this manual or to the Maintenance Manual Supplement:
4. Replace all of the life limited components that have completed their specified operating life (505-A-04-00-00-00A-009A-A / 00007):
5. Remove and overhaul all of the components that have completed their specified operating life. Refer to the Component Overhaul Schedule (505-A-05-11-00-00A-018A-A / 00017).
6. If an instrument shows an Exceedance, conduct the required inspection and make sure that there is a log book entry for this instrument:

POST OFFICE BOX 482 • FORT WORTH, TEXAS 76101

Intentionally blank page

POST OFFICE BOX 482 • FORT WORTH, TEXAS 76101

Appendix B - M505 Defect Sheet

Table 1. Appendix B

M505 INSPECTION - DEFECT SHEET

Review the logbook for defects and exceedances. Correct the defects on the installed equipment. Correct and make a record of the defect(s) that you identified during this inspection. For any equipment with a defect: if this equipment is not required under the current operating conditions and is not on the Master Minimum Equipment List (MMEL) , you can remove it for repair.

DEFECT:

CORRECTION:

DEFECT:

CORRECTION:

DEFECT:

CORRECTION:

DEFECT:

CORRECTION:

DEFECT:

CORRECTION:

POST OFFICE BOX 482 • FORT WORTH, TEXAS 76101

Intentionally blank page

POST OFFICE BOX 482 • FORT WORTH, TEXAS 76101

Time limits - Introduction

The components in the list of Table 1 are components that need to be discarded at specified intervals and are not included in Chapter 4.

Table 1. Time limits

Nomenclature	Part number	Interval	Reference DM for applicability
Transmission oil filter element	206-040-128-001	300 flight hours/1 year	BHT-505-MM, Chapter 63
Engine oil filter element	Refer to the manufacturer's manual for part number.	600 flight hours/2 years	Refer to the manufacturer's manual for applicability.
Hydraulic filter element	QA07941	*DELETED* 300 flight hours.	BHT-505-MM, Chapter 29
Hydraulic pressure filter element	206-076-034-003	**NOTE** *If the hydraulic pump M206-20H030-043 is installed for the first time or replaced, discard the hydraulic pressure filter element after 100 flight hours/1 year.* **NOTE** *The hydraulic pressure filter element needs to be cleaned every 300 flight hours* 1200 flight hours	BHT-505-MM, Chapter 29
Fire extinguisher	RT-A400	12 years	BHT-505-MM, Chapter 26
Standby Attitude Module Battery	9117177	6 years	BHT-505-MM, Chapter 34

POST OFFICE BOX 482 • FORT WORTH, TEXAS 76101

Intentionally blank page

POST OFFICE BOX 482 • FORT WORTH, TEXAS 76101

Component restoration (overhaul) schedule - Introduction

The components in the list of Table 1 are components that need to have restoration (overhaul) done at a specified intervals.

Table 1. Component restoration (overhaul) schedule

Nomenclature	Part number (1)	Restoration (overhaul) interval (2)	Reference DM for applicability
Cargo hook	Refer to the manufacturer's manual for part number.	5000 flight Hours/5 years	BHT-505-IPC-1, Chapter 25
Preference injector	Refer to the manufacturer's manual for part number.	200 flight Hours	*PRE TF 91. Refer to the manufacturer's manual for the applicability.*
Starter generator	200SGL157Q	1000 flight Hours	BHT-505-IPC-1, Chapter 24
Calipers, if installed	B0249-3	1800 flight hours	BHT-505-IPC-1, Chapter 63
Main driveshaft	SLS-340-031-103	2000 flight hours	BHT-505-IPC-1, Chapter 63
Main rotor hub assembly	206-011-100-109	2400 flight hours	BHT-505-IPC-1, Chapter 62
Tail rotor hub assembly	206-011-810-153	2500 flight hours	BHT-505-IPC-1, Chapter 64
Freewheel assembly	406-040-500-147	3000 flight hours	BHT-505-IPC-1, Chapter 63
Mast assembly	206-040-014-107	3000 flight hours	BHT-505-IPC-1, Chapter 63
Gas generator module	Refer to the manufacturer's manual for part number.	3000 flight hours	Refer to the manufacturer's manual for applicability.
Reduction gear module	Refer to the manufacturer's manual for part number.	3000 flight hours	Refer to the manufacturer's manual for applicability.
Pump and metering unit assembly	Refer to the manufacturer's manual for part number.	3000 flight hours	Refer to the manufacturer's manual for applicability.
Transmission assembly	206-040-004-117	4500 flight hours	BHT-505-IPC-1, Chapter 63
Swashplate and support assembly	206-010-450-123	4800 flight hours	BHT-505-IPC-1, Chapter 62
Tail rotor gearbox	206-040-402-111	6000 flight hours	BHT-505-IPC-1, Chapter 65

1 The interval specified for restoration (overhaul) of any given part number listed applies to all successive dash numbers (or suffixes) for that component, unless specified differently.

2 *The overhaul must only be performed by an approved repair facility.*

POST OFFICE BOX 482 • FORT WORTH, TEXAS 76101

Intentionally blank page

POST OFFICE BOX 482 • FORT WORTH, TEXAS 76101

Scheduled maintenance checks - Introduction

1. SCHEDULED INSPECTIONS

Bell Textron has applied the Maintenance Steering Group – 3rd Task Force (MSG-3) methodology to develop the scheduled maintenance/ inspection program of the Model 505 helicopter. The resulting scheduled inspections are designed to improve reliability and helicopter availability while reducing maintenance costs.

To provide additional detail on the process, MSG-3 was used to develop the initial scheduled maintenance/inspection program in conjunction with a Customer Maintenance Advisory Panel (CMAP) . To ensure a diverse knowledge base while also taking into account various helicopter operational environments, the CMAP team was comprised of experienced helicopter maintainers from around the world as well as regulatory specialists from Transport Canada Civil Aviation (TCCA) , the Federal Aviation Administration (FAA) , the European Aviation Safety Agency (EASA) , Product Support Engineering, and other specialists from Bell Textron.

The MSG-3 process provides individual maintenance programs for the helicopter system inspections, structure inspections, zonal inspections, and enhanced zonal inspections as follows:

- The systems program develops maintenance/ inspection tasks based on MSG-3 systems analysis.
- The structures program develops specific, directed inspection tasks of each structural significant item based on MSG-3 structural analysis.
- The zonal program develops general visual inspection tasks of system installations and structure on a zone by zone basis of the helicopter.
- The enhanced zonal program develops general visual inspection and detailed inspection tasks of the helicopters Electrical Wiring Interconnection System (EWIS) .

Following completion of all of the required MSG-3 analysis, the maintenance/inspection tasks were compiled into the Maintenance Type Board Report (MTBR) . The information contained within the MTBR is based on the basic type certificate of the helicopter, including all Bell Textron kits. Supplemental Type Certificates (STC's) or modifications/installations performed by the operator are not taken into account. The MTBR is available upon request from Product Support Engineering.

The information contained within the MTBR was then used to create the scheduled inspections within this chapter. Nine digit task numbers (i.e., 62-30-09-001) are provided in the data reference column of the various scheduled inspections within this chapter. These task numbers coincide with the inspection tasks developed as part of the MSG-3 process and can be referenced in the MTBR. Although use of the task numbers and cross referencing back to the MTBR for task information is not a requirement to conduct the inspection tasks provided in this chapter, the information is provided to ensure traceability to the source document where the task was developed.

As the MTBR is a "living document" subject to regular review, the scheduled inspections provided in this chapter will be updated following approval of any revision to the MTBR. Revisions to the scheduled maintenance program through modification of the MTBR may be initiated by industry, the CMAP, or Bell Textron. These revisions may result from service experience, manufacturers test data, analysis, changes in configuration or standard options, and/or changes to the policies or methods by which the maintenance tasks are derived.

The scheduled inspections contained in the inspection program include all of the airframe, component, zonal, and Bell Textron optional equipment kit inspections for which the interval is based on airframe or component operation time, as applicable.

NOTE

The Turbomeca Maintenance Manual Trouble Shooting (MMTS) (X319 R5 460 2) includes all of the instructions for continued airworthiness for the ARRIUS 2R engine, as installed in the Model 505 helicopter and operated in accordance with the limitations contained in the Flight Manual (BHT-505-FM).

Refer to the Turbomeca Maintenance Manual Trouble Shooting (MMTS) (X319 R5 460 2) for the scheduled maintenance checks of the ARRIUS 2R engine.

1.1. Scheduled inspections – Types of scheduled inspections

Other than the servicing requirements stated in the scheduled inspection program, the program consists of scheduled inspections which can be general visual inspections or detailed inspections, as required.

1.1.1. General Visual Inspections (GVI)

The General Visual Inspection (GVI) is made from within touching distance, unless otherwise specified. A mirror may be necessary to enhance visual access to all exposed surfaces in the inspection area. The inspection is made under normally available lighting conditions such as daylight, hangar lighting, flashlight, or drop-light and may require

removal or opening of access panels or doors. Stands, ladders, or platforms may be required to gain proximity to the area being checked.

When the step "Make sure that the part is correctly installed" is in a procedure, this means that you need to make sure the component is safely in place, the hardware is not loose, and the safety item(s) (e.g., cotter pin, lockwire) are in place and they are correctly installed.

1.1.2. Detailed Inspections (DET)

Available lighting is normally supplemented with a direct source of good lighting at an intensity deemed appropriate. Inspections aids such as mirrors, magnifying lenses, etc. may be necessary. The examination is likely to make extensive use of specialized inspection techniques and/or equipment. Intricate cleaning and substantial access or disassembly procedures may be required.

When the step "Make sure that the part is correctly installed" is in a procedure, this means that you need to make sure the component is safely in place, the hardware is not loose, and the safety item(s) (e.g., cotter pin, lockwire) are in place and they are correctly installed.

1.2. Zonal inspections

Refer to 505-A-05-40-00-00A-028A-A / 00019 for the information and complete description of the zonal inspections.

1.3. Optional equipment inspections

NOTE

Scheduled optional equipment inspections are established for optional BHT kits requiring scheduled inspections to ensure continuing airworthiness.

Perform and record the scheduled optional equipment inspections as applicable.

1.4. Interval tolerance

The approval of an inspection interval tolerance by a governing aviation authority is the responsibility of the owner/operator. Please contact your governing aviation authority to request a scheduled inspection interval tolerance. The tolerance would be established for maintenance scheduling convenience only. If a tolerance is applied, the subsequent inspection interval will be adjusted to re-establish the original inspection schedule.

NOTE

The Bell approved tolerance for scheduled inspections, special inspections, and overhaul intervals, unless specified, is 10% or up to a maximum of 100 hours operating time/30 days calendar time, whichever is less. The tolerances are established for maintenance scheduling convenience only.

Calendar Example:

1 YEAR INSPECTION DUE ON:	INSPECTION CARRIED OUT ON:	NEXT 1 YEAR INSPECTION DUE ON:
June 10, 2010	*June 1, 2010 (completed early)*	*June 1, 2011* (1)
June 1, 2011	*June 10, 2011 (completed late)*	*June 10, 2012* (1)
May 15, 2012	*May 15, 2012*	*May 15, 2013* (1)
1 The 505 maintains the calendar day that the previous inspection was completed.		

1.5. Inspection program

To complete the inspection program of the helicopter, perform and record all of the following inspections:

- 25 flight hours inspection (505-A-05-43-00-03A-000A-A / 00036):

  Complete the inspection each 25 hours of operation time.
- 50 flight hours inspection (505-A-05-43-00-06A-000A-A / 00037):

Complete the inspection each 50 hours of operation time.

- 50 flight hours/1 year inspection (505-A-05-41-00-05A-000A-A / 00022):

Complete the inspection each 50 hours of operation time or one year, whichever occurs first.

- 100 flight hours inspection (505-A-05-43-00-09A-000A-A / 00038):

Complete the inspection each 100 hours of operation time.

- 100 flight hours/6 months inspection (505-A-05-41-00-10A-000A-A / 00023):

Complete the inspection each 100 hours of operation time or six months, whichever occurs first.

- 100 flight hours/1 year inspection (505-A-05-41-00-15A-000A-A / 00024):

Complete the inspection each 100 hours of operation time or one year, whichever occurs first.

- 100 flight hours/18 months inspection (505-A-05-41-00-17A-000A-A / 00025):

Complete the inspection each 100 hours of operation time or 18 months, whichever occurs first.

- 150 flight hours inspection (505-A-05-43-00-10A-000A-A / 00039):

Complete the inspection each 150 hours of operation time.

- 200 flight hours inspection (505-A-05-43-00-12A-000A-A / 00040):

Complete the inspection each 200 hours of operation time.

- 300 flight hours inspection (505-A-05-43-00-15A-000A-A / 00041):

Complete the inspection each 300 hours of operation time.

- 300 flight hours/1 year inspection (505-A-05-41-00-20A-000A-A / 00026):

Complete the inspection each 300 hours of operation time or one year, whichever occurs first.

- 400 flight hours inspection (505-A-05-43-00-18A-000A-A / 00042):

Complete the inspection each 400 hours of operation time.

- 400 flight hours/1 year inspection (505-A-05-41-00-30A-000A-A / 00027):

Complete the inspection each 400 hours of operation time or one year, whichever occurs first.

- 500 flight hours inspection (505-A-05-43-00-21A-000A-A / 00043):

Complete the inspection each 500 hours of operation time.

- 600 flight hours inspection (505-A-05-43-00-24A-000A-A / 00044):

Complete the inspection each 600 hours of operation time.

- 600 flight hours/1 year inspection (505-A-05-41-00-35A-000A-A / 00028):

Complete the inspection each 600 hours of operation time or one year, whichever occurs first.

- 600 flight hours/2 years inspection (505-A-05-41-00-38A-000A-A / 00029):

Complete the inspection each 600 hours of operation time or two years, whichever occurs first.

- 600 flight hours/3 years inspection (505-A-05-41-00-40A-000A-A / 00030):

Complete the inspection each 600 hours of operation time or three years, whichever occurs first.

- 1000 flight hours inspection (505-A-05-43-00-26A-000A-A / 00045):

Complete the inspection each 1000 hours of operation time.

- 1200 flight hours inspection (505-A-05-43-00-27A-000A-A / 00046):

Complete the inspection each 1200 hours of operation time.

- 1200 flight hours/2 years inspection (505-A-05-41-00-45A-000A-A / 00031):

Complete the inspection each 1200 hours of operation time or two years, whichever occurs first.

- 1500 flight hours inspection (505-A-05-43-00-30A-000A-A / 00047):

Complete the inspection each 1500 hours of operation time.

- 1800 flight hours inspection (505-A-05-43-00-33A-000A-A / 00048):

Complete the inspection each 1800 hours of operation time.

- 2000 flight hours inspection (505-A-05-43-00-36A-000A-A / 00049):

Complete the inspection each 2000 hours of operation time.

- 2250 flight hours/6 years inspection (505-A-05-41-00-55A-000A-A / 00032):

Complete the inspection each 2250 hours of operation time or six years, whichever occurs first.

- 2400 flight hours inspection (505-A-05-43-00-39A-000A-A / 00050):

Complete the inspection each 2400 hours of operation time.

- 2500 flight hours inspection (505-A-05-43-00-42A-000A-A / 00051):

Complete the inspection each 2500 hours of operation time.

- 3000 flight hours inspection (505-A-05-43-00-45A-000A-A / 00052):

Complete the inspection each 3000 hours of operation time.

- 3000 flight hours/6 years inspection (505-A-05-41-00-60A-000A-A / 00034):

Complete the inspection each 3000 hours of operation time or six years, whichever occurs first.

- 4500 flight hours inspection (505-A-05-43-00-51A-000A-A / 00053):

Complete the inspection each 4500 hours of operation time.

- 4800 flight hours inspection (505-A-05-43-00-54A-000A-A / 00054):

Complete the inspection each 4800 hours of operation time.

- 5000 flight hours/5 years inspection (505-A-05-41-00-70A-000A-A / 00035):

Complete the inspection each 5000 hours of operation time or five years, whichever occurs first.

- 6000 flight hours inspection (505-A-05-43-00-57A-000A-A / 00055):

Complete the inspection each 6000 hours of operation time.

- 30 days inspection (505-A-05-45-00-05A-000A-A / 00056):

Complete the inspection each 30 days.

- 1 year inspection (505-A-05-45-00-10A-000A-A / 00057):

Complete the inspection each one year.

- 2 years inspection (505-A-05-45-00-15A-000A-A / 00058):

Complete the inspection each two years.

- 3 years inspection (505-A-05-45-00-20A-000A-A / 00059):

Complete the inspection each three years.

- 4 years inspection (505-A-05-45-00-25A-000A-A / 00060):

Complete the inspection each four years.

- 5 years inspection (505-A-05-45-00-30A-000A-A / 00061):

Complete the inspection each five years.

- 6 years inspection (505-A-05-45-00-35A-000A-A / 00062):

Complete the inspection each six years.

- 7 years inspection (505-A-05-45-00-40A-000A-A / 00063):

Complete the inspection each seven years.

- 9 years inspection (505-A-05-45-00-45A-000A-A / 00064):

Complete the inspection each nine years.

- 10 years inspection (505-A-05-45-00-47A-000A-A / 00065):

Complete the inspection each 10 years.

- 12 years inspection (505-A-05-45-00-50A-000A-A / 00066):

Complete the inspection each 12 years.

- 15 years inspection (505-A-05-45-00-55A-000A-A / 00067):

  Complete the inspection each 15 years.

- 1000 landing cycles inspection (505-A-05-46-00-05A-000A-A / 00068):

  Complete the inspection each 1000 landing cycles.

POST OFFICE BOX 482 • FORT WORTH, TEXAS 76101

Intentionally blank page

POST OFFICE BOX 482 • FORT WORTH, TEXAS 76101

Scheduled maintenance checks (zonal inspections) - General

1. Zonal inspections

NOTE

Refer to BHT-505-MM, Chapter 6 for the identification and complete description of the zones.

Refer to BHT-505-MM, Chapter 6 for the identification and complete description of the access panels.

The zonal inspections are General Visual Inspections (GVI) which are part of the scheduled inspection program of the helicopter. These inspections are intended to make sure that all systems, power plant installations, components, structures, and Electrical Wire Interconnection System (EWIS) are visually examined sufficiently for correct installation and general condition.

The zonal inspections must be done within arms-reach distance, unless specified differently. The only inspection aids necessary are a flashlight and a mirror.

Do a zonal inspection as follows:

1. In the applicable zone, remove the seats, carpets, access panels, covers, doors, cowlings, etc., as necessary.
2. In the applicable zone, lift the insulation material sufficiently to do the structural inspection, as necessary.
3. In the applicable zone, examine all components, metallic or composite structure, and/or wiring installation, as necessary, paying particular attention to the items shown in Table 1 through Table 3.

Table 1. Zonal inspections – Mechanical assemblies/systems and structure

ITEM	DEFECT, DAMAGE, FAILURE, OR IRREGULARITY
Mechanical assemblies/systems and structure	Cleanliness
	Damage, cracks, deterioration of protection treatment, and corrosion
	Wear, chafing, dents, distortion, fouling, bending, scoring, and fraying
	Loose, damaged, or missing fasteners
	Fluid leakage
	Correct operation of drain holes (i.e., no blockage or obstruction)
	Moisture accumulation
	Correct installation and security of control rods and bellcranks
	Correct installation of wiring harnesses, electrical bonding, ground studs, and tubing
	Correct installation of connectors and backshells. (e.g., no red witness bands are visible)
	Correct installation of connectors and backshells with other forms of Lightning and High Intensity Radiated Frequency (L/HIRF) protection

Table 2. Zonal inspections – Composite structure

ITEM	DEFECT, DAMAGE, FAILURE, OR IRREGULARITY
Composite structure	Cleanliness
	Discoloration (due to overheating)
	Delamination and voids
	Foreign matter, signs of scratches, crazing, cracks, dents, and pitting
	Air bubbles, blisters, porosity, orange peeling, and wrinkles

POST OFFICE BOX 482 • FORT WORTH, TEXAS 76101

Table 3. Zonal inspections – Electrical Wire Interconnection System (EWIS)

ITEM (1)	DEFECT, DAMAGE, FAILURE, OR IRREGULARITY
Wire/wire harnesses	Wire bundle/wire bundle or wire bundle/structure contact/chafing
	Wire bundle sagging or improperly secured
	Wires damaged (obvious damage due to mechanical impact, overheat, localized chafing, etc.)
	Lacing tape and/or ties missing/incorrectly installed
	Wiring protection sheath/conduit deformity or incorrectly installed
	End of sheath rubbing on end attachment device
	Grommet missing or damaged
	Dust and lint accumulation
	Surface contamination by metal shavings/swarf
	Contamination by liquids
	Deterioration of previous repairs (e.g., splices)
	Deterioration of production splices
	Inappropriate repairs (e.g., incorrect splice)
	Inappropriate attachments to or separation from fluid lines
Connectors	External corrosion on receptacles
	Missing/loose or damaged dust cap
	Backshell tail broken
	Rubber pad or packing on backshell missing
	Missing sealant to prevent corrosion between connector and mounting interface for shielded assemblies
	No backshell wire securing device
	Fool proofing chain broken
	Missing or broken safety wire
	Loose swing arm backshell screws or missing screw
	Discoloration/evidence of overheating on terminal lugs/blocks
	Torque stripe misalignment
Switches	Rear protection cap damaged
	Abnormal strain on wire connections
Ground points	Corrosion and looseness
	Missing sealant to prevent corrosion between grounding device and mounting interface for shielded assemblies
Bonding braid/bonding jumper	Braid broken or disconnected
	Multiple strands corroded or broken
Wiring clamps or brackets	Corroded
	Broken/missing
	Bent or twisted
	Faulty attachment (bad attachment or fastener missing)
	Debonded/detached
	Protection/cushion damaged

POST OFFICE BOX 482 • FORT WORTH, TEXAS 76101

Table 3. Zonal inspections – Electrical Wire Interconnection System (EWIS) (continued)

ITEM (1)	DEFECT, DAMAGE, FAILURE, OR IRREGULARITY
Supports (rails or tubes/conduit)	Broken Deformed Fastener missing Missing edge protection on rims of feed through holes Racetrack cushion damaged Obstructed drainage holes (in conduits)
Circuit breakers, contactors, or relays	Signs of overheating Missing terminal protective device Signs of arcing Looseness

1 For specific electrical maintenance information and procedures, refer to the BHT-ELEC-SPM and the associated chapters. These locations will provide the data necessary to repair and replace wires, cables, and electrical components. In specific regards to electrical bonding requirements and unless specified differently, the Class R-II value of less than 10 milliohms is to be used on the Model 505.

POST OFFICE BOX 482 • FORT WORTH, TEXAS 76101

Intentionally blank page

POST OFFICE BOX 482 • FORT WORTH, TEXAS 76101

Scheduled zonal restoration (cleaning) - General

1. Zonal restoration (cleaning)

NOTE

Refer to BHT-505-MM, Chapter 6 for the identification and complete description of the zones.

Refer to BHT-505-MM, Chapter 6 for the identification and complete description of the access panels.

The zonal restoration (cleaning) tasks are part of the scheduled inspection program of the helicopter. These restoration (cleaning) tasks are intended to maintain the functionality of the Electrical Wire Interconnection System (EWIS) and to reduce the risk of smoke and fire in the helicopter.

Do a zonal restoration (cleaning) task as follows:

1. In the applicable zone, remove the access panels, as necessary.
2. In the applicable zone, remove the dust, lint accumulation, and/or debris, as necessary.
3. In the applicable zone, clean any fuel, oil, and/or hydraulic fluid, as necessary (BHT-ALL-SPM, Chapter 5).

POST OFFICE BOX 482 • FORT WORTH, TEXAS 76101

Intentionally blank page

POST OFFICE BOX 482 • FORT WORTH, TEXAS 76101

Scheduled maintenance checks (L/HIRF inspections) - General

1. L/HIRF inspections

NOTE

Refer to BHT-505-MM, Chapter 6 for the identification and complete description of the zones.

Refer to BHT-505-MM, Chapter 6 for the identification and complete description of the access panels.

The Lightning and High Intensity Radiated Frequency (L/HIRF) inspections are General Visual Inspections (GVI) which are part of the scheduled inspection program of the helicopter. These inspections are intended to reduce the risk that a single failure (e.g. lightning strike) and/or the occurrence of a common failure (e.g. environmental and accidental damage) of the L/HIRF protection system, has an effect on the airworthiness of the helicopter.

The L/HIRF inspections must be done within arms-reach distance, unless specified differently. The only inspection aids necessary are a flashlight and a mirror.

Do an L/HIRF inspection as follows:

1. In the applicable zone, remove the access panels, as necessary.
2. In the applicable zone, examine the components identified in the Figure 1 or Figure 2.
3. As necessary, repair or replace the damaged panel or skin. Contact Product Support Engineering (PSE) for technical support.
4. As necessary, repair or replace the damaged electrical component (BHT-ELEC-SPM).

POST OFFICE BOX 482 • FORT WORTH, TEXAS 76101

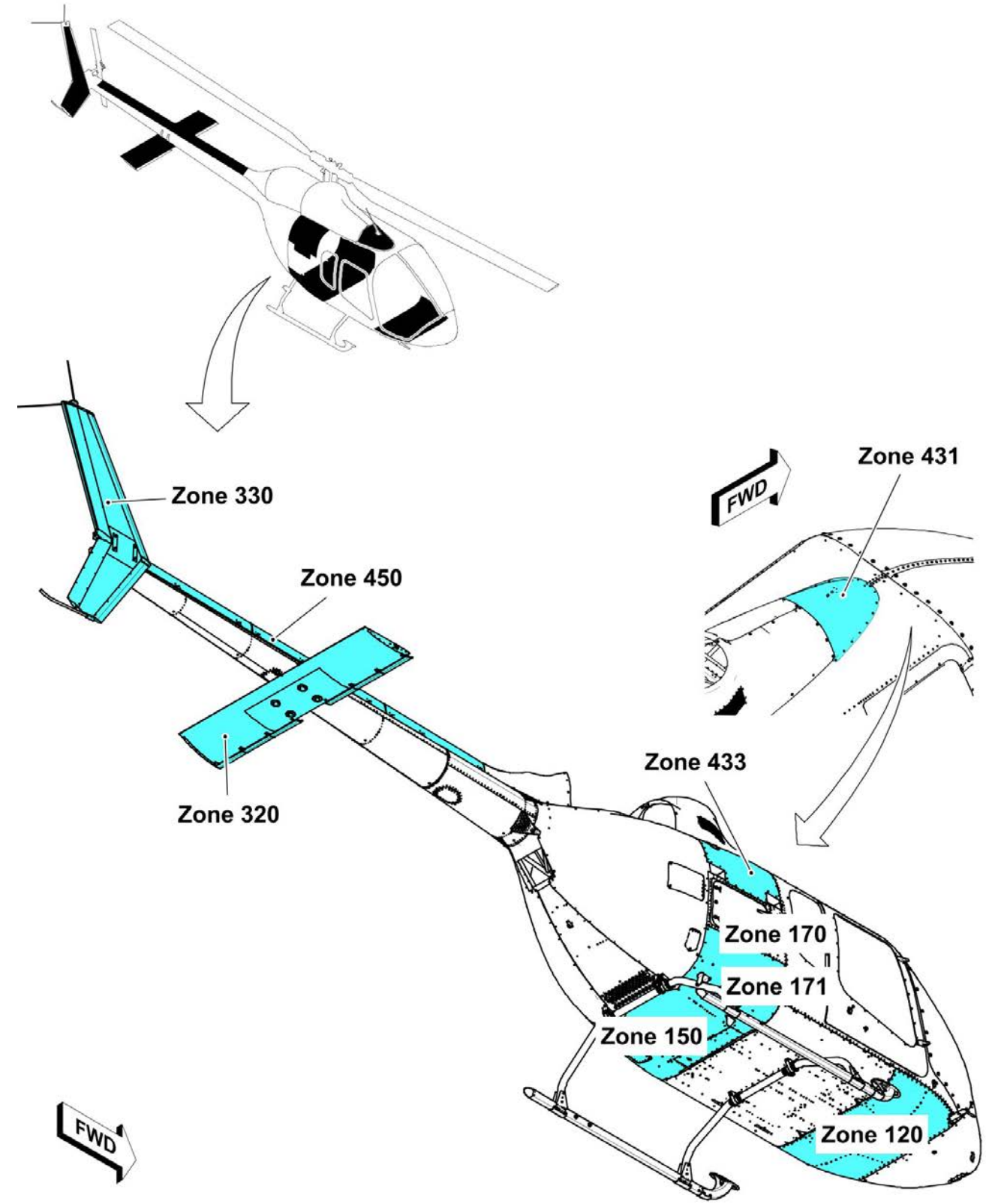

ICN-505-A-054000-B-97499-00578-A-001-01

Figure 1. External L/HIRF inspections - General (Sheet 1 of 1)

POST OFFICE BOX 482 • FORT WORTH, TEXAS 76101

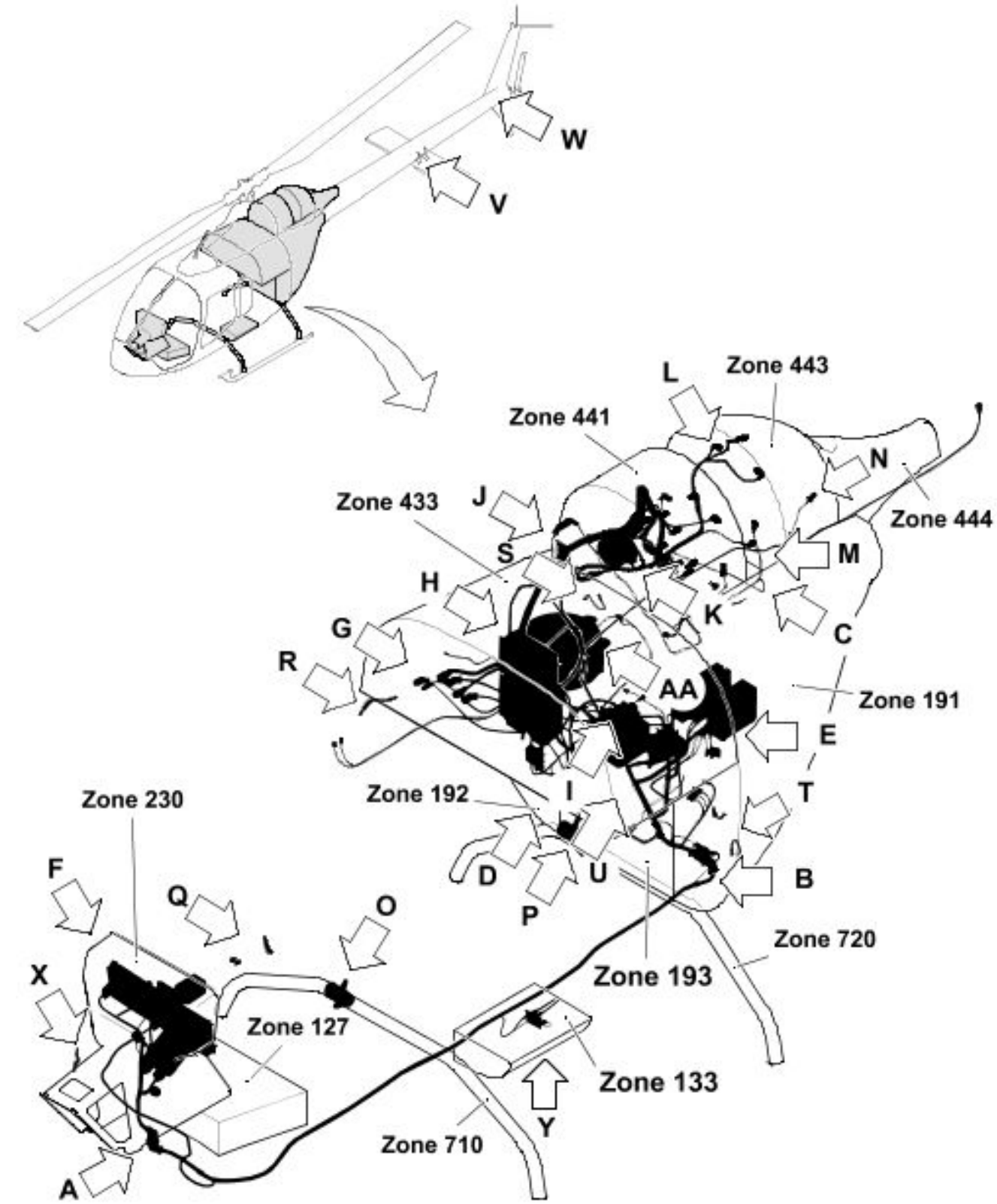

ICN-505-A-054000-B-97499-01696-A-002-01

Figure 2. Internal L/HIRF Inspections - General (Sheet 1 of 27)

POST OFFICE BOX 482 • FORT WORTH, TEXAS 76101

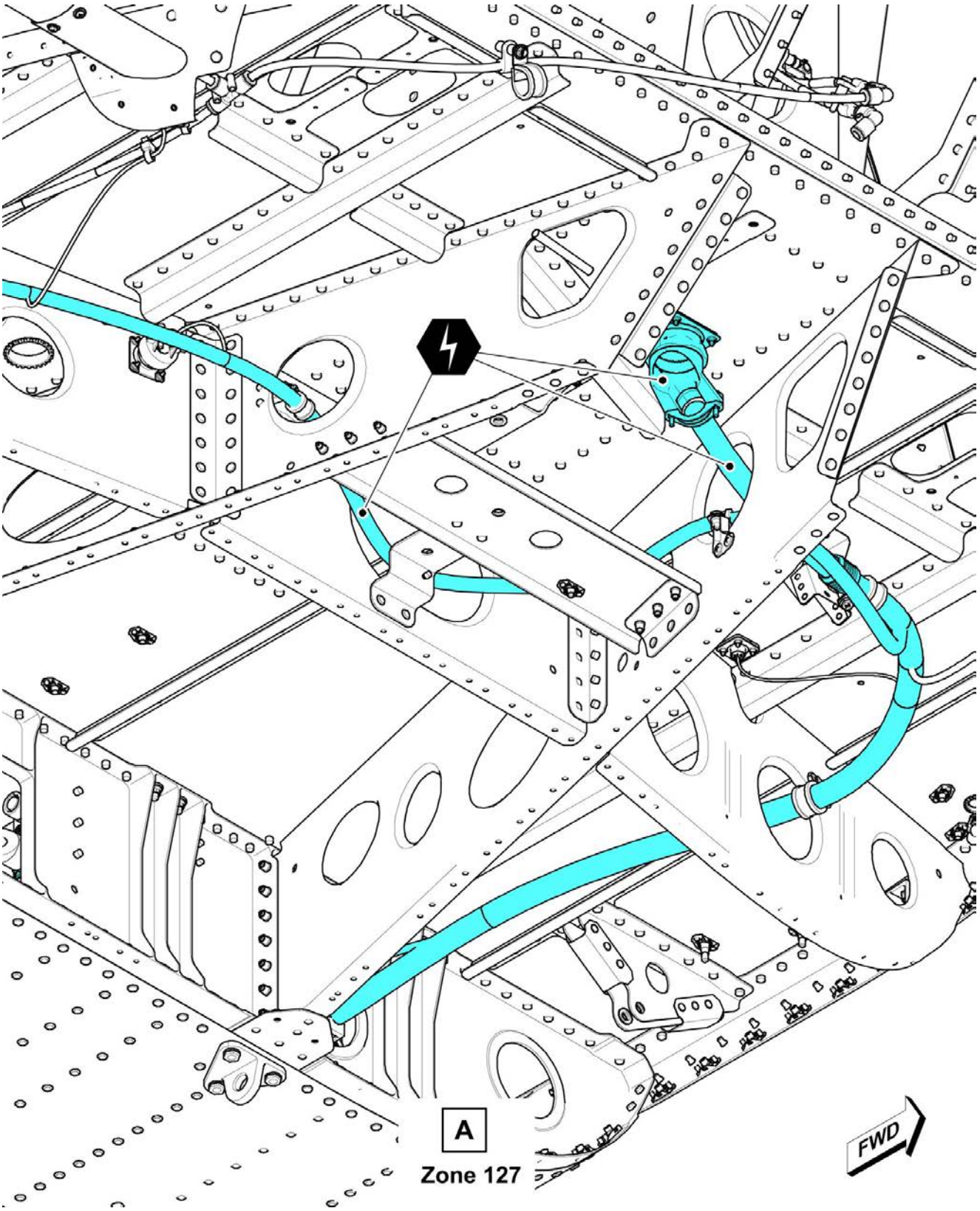

ICN-505-A-054000-B-97499-01697-A-001-01

Figure 2. Internal L/HIRF Inspections - General (Sheet 2 of 27)

POST OFFICE BOX 482 • FORT WORTH, TEXAS 76101

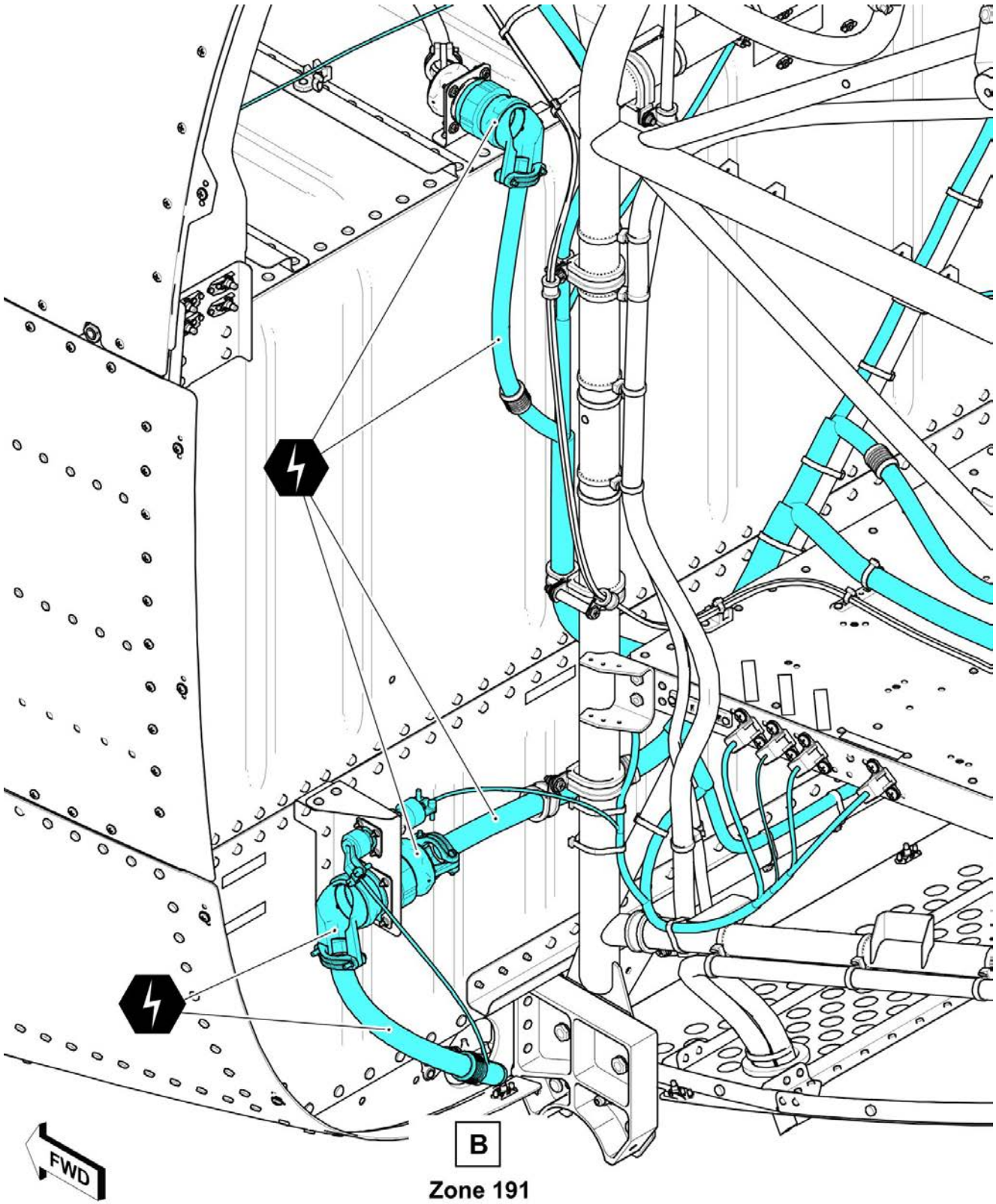

ICN-505-A-054000-B-97499-01698-A-001-01

Figure 2. Internal L/HIRF Inspections - General (Sheet 3 of 27)

POST OFFICE BOX 482 • FORT WORTH, TEXAS 76101

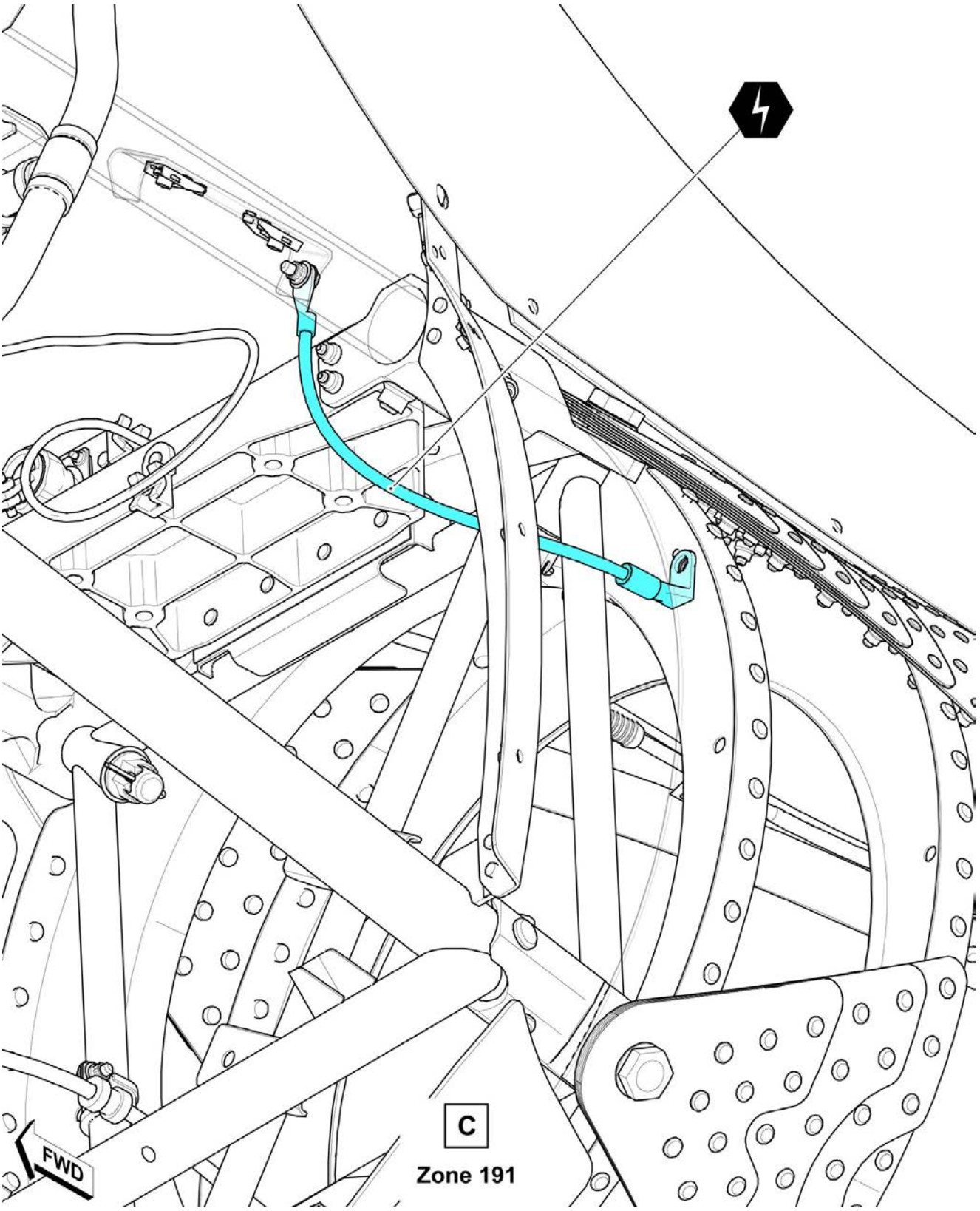

ICN-505-A-054000-B-97499-01699-A-001-01

Figure 2. Internal L/HIRF Inspections - General (Sheet 4 of 27)

POST OFFICE BOX 482 • FORT WORTH, TEXAS 76101

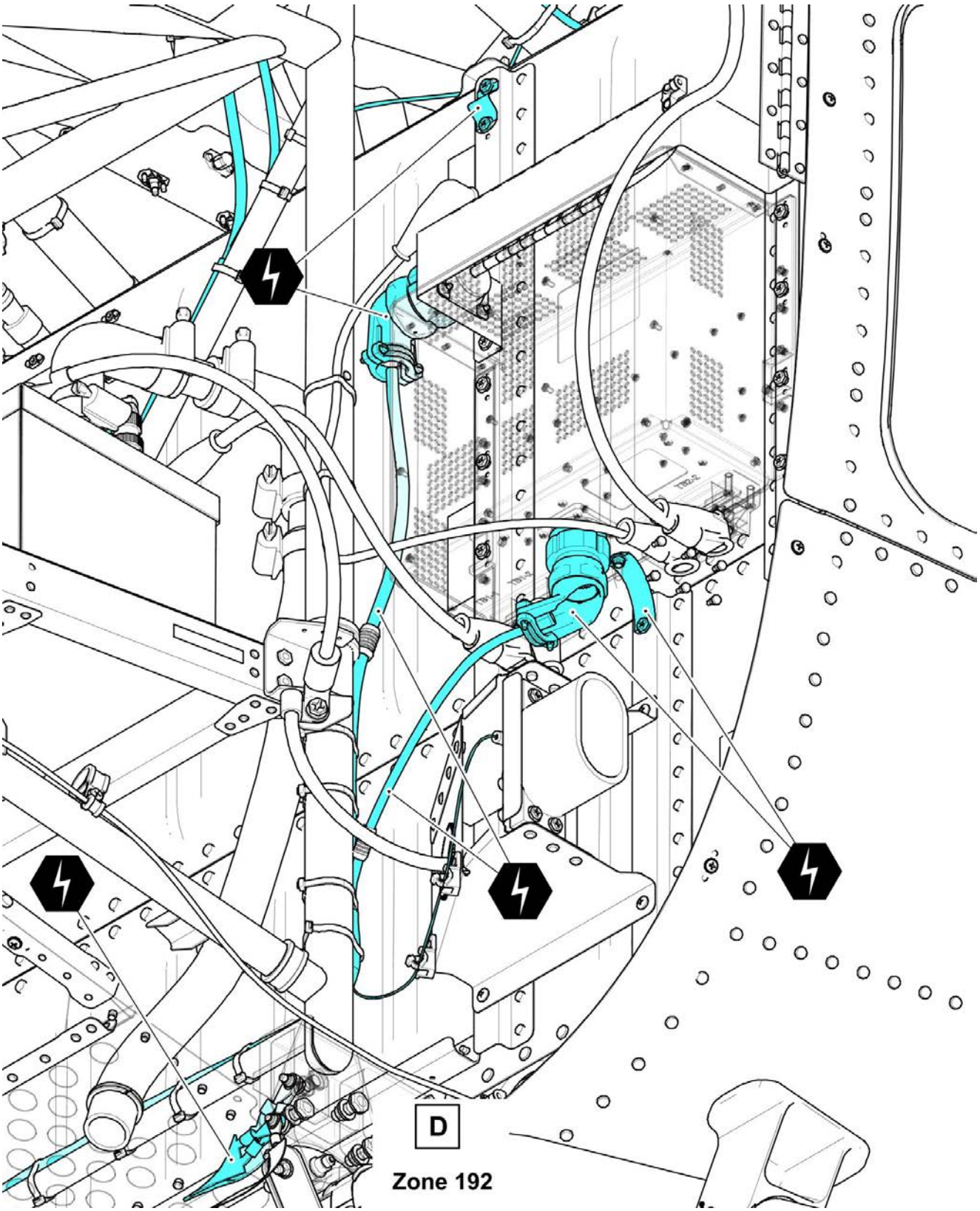

ICN-505-A-054000-B-97499-01700-A-001-01

Figure 2. Internal L/HIRF Inspections - General (Sheet 5 of 27)

POST OFFICE BOX 482 • FORT WORTH, TEXAS 76101

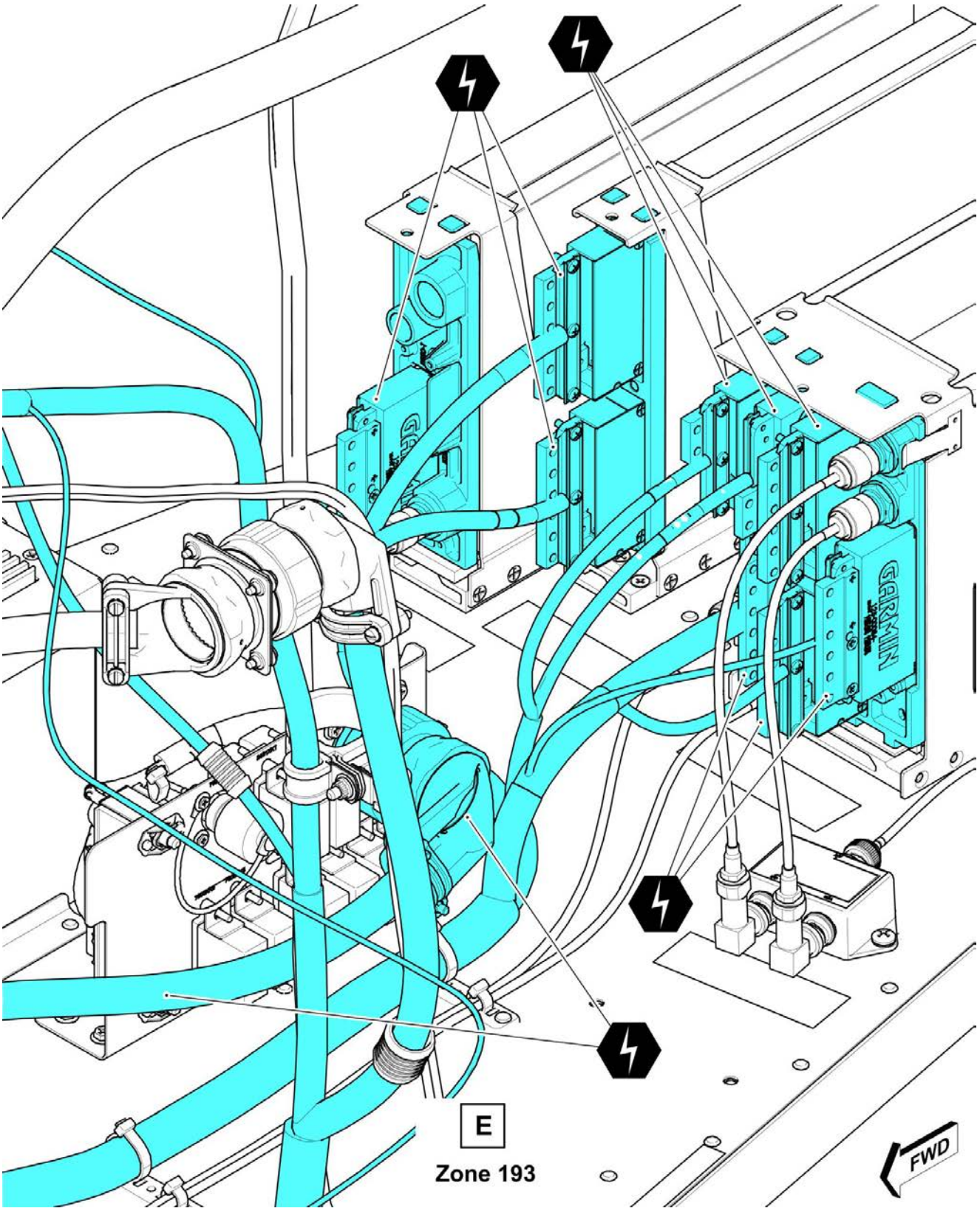

ICN-505-A-054000-B-97499-01701-A-001-01

Figure 2. Internal L/HIRF Inspections - General (Sheet 6 of 27)

POST OFFICE BOX 482 • FORT WORTH, TEXAS 76101

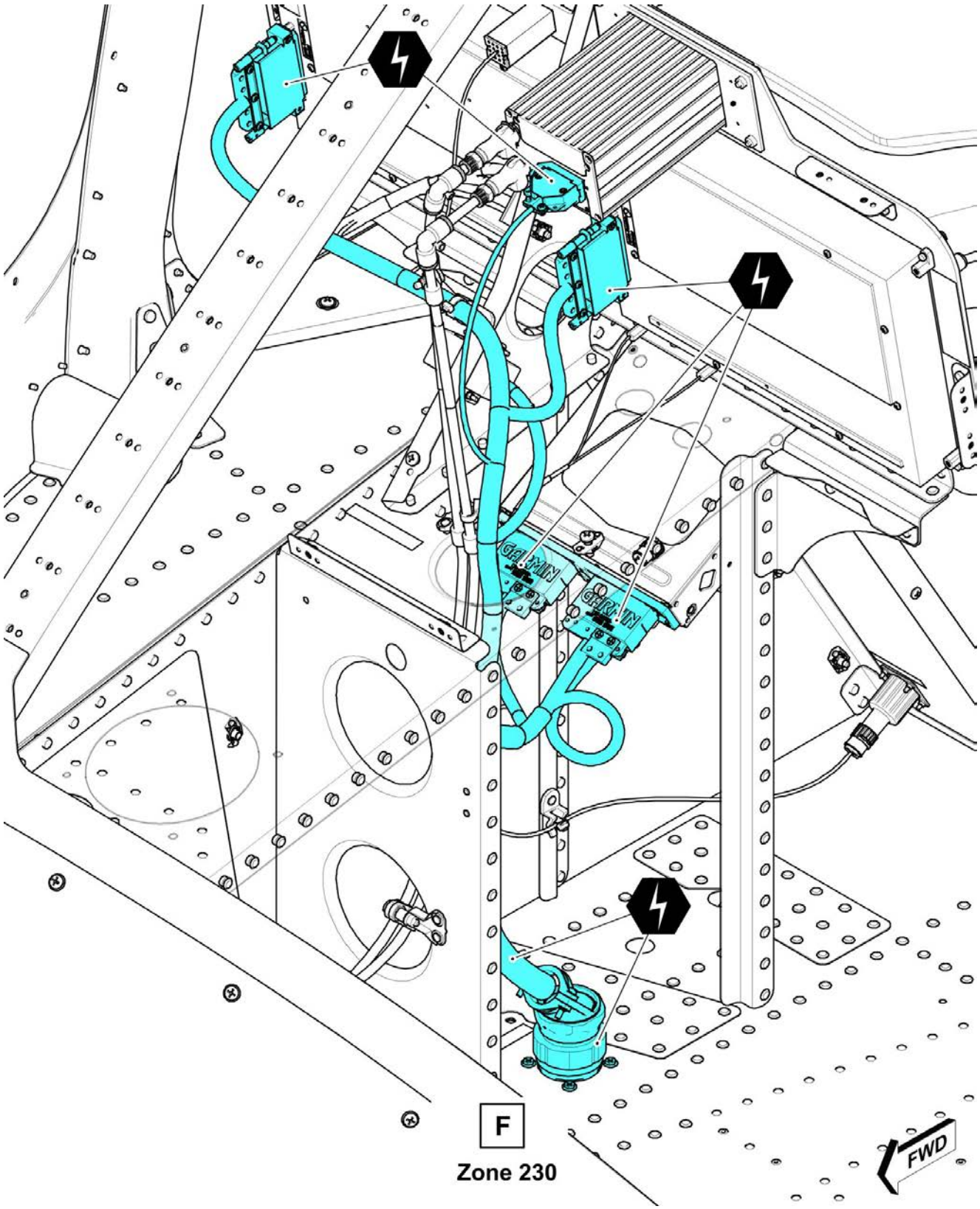

ICN-505-A-054000-B-97499-01702-A-001-01

Figure 2. Internal L/HIRF Inspections - General (Sheet 7 of 27)

POST OFFICE BOX 482 • FORT WORTH, TEXAS 76101

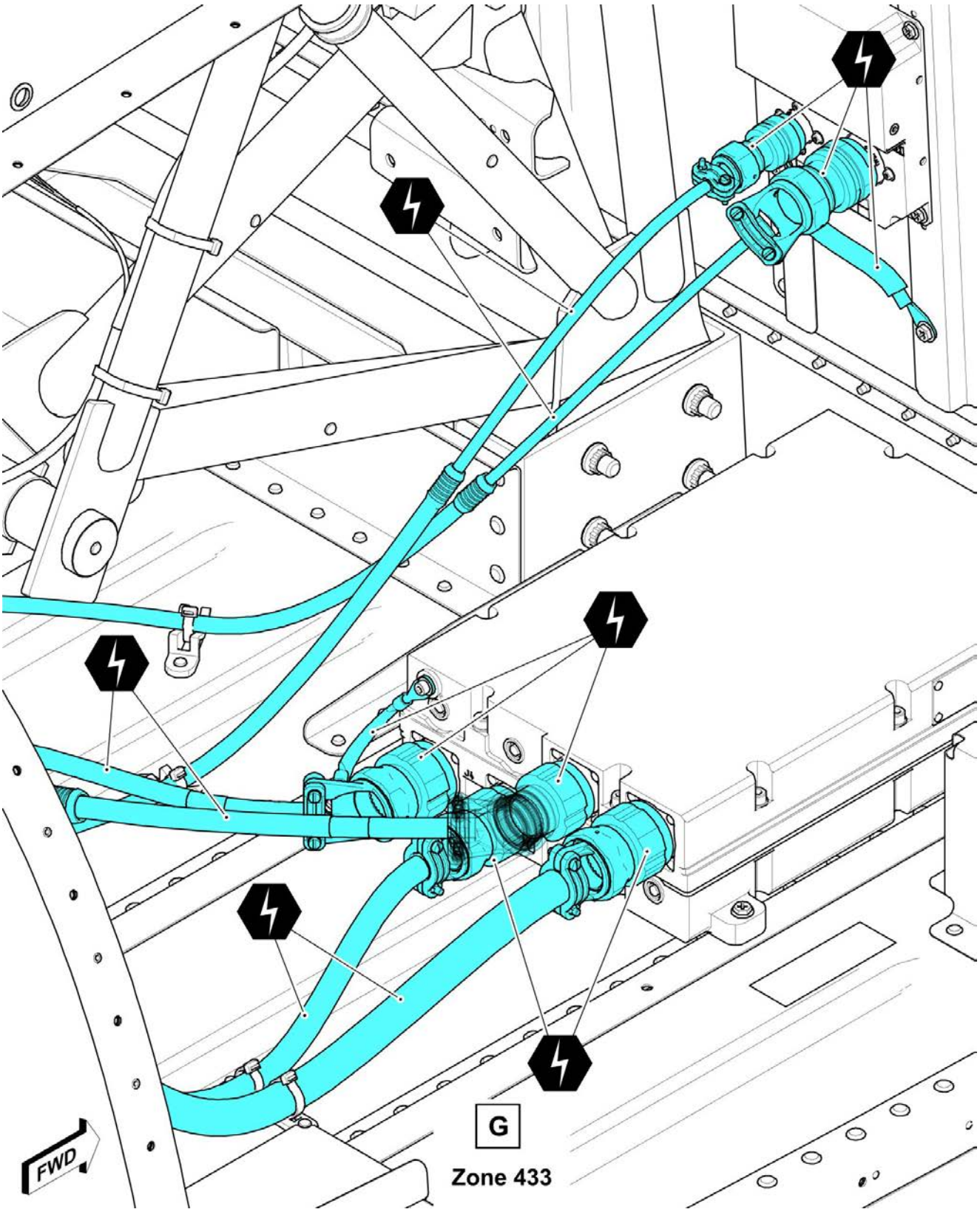

ICN-505-A-054000-B-97499-01703-A-001-01

Figure 2. Internal L/HIRF Inspections - General (Sheet 8 of 27)

POST OFFICE BOX 482 • FORT WORTH, TEXAS 76101

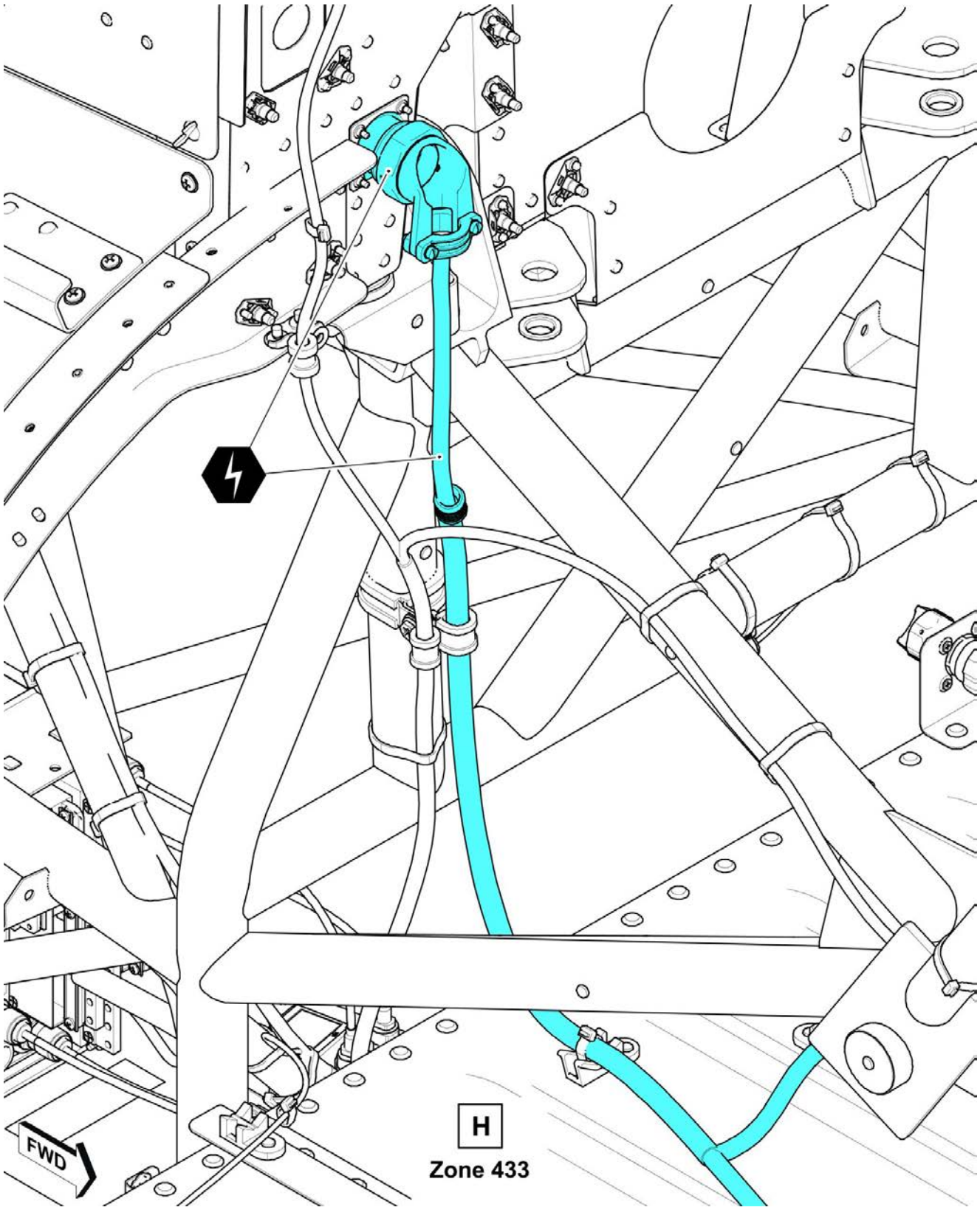

ICN-505-A-054000-B-97499-01704-A-001-01

Figure 2. Internal L/HIRF Inspections - General (Sheet 9 of 27)

POST OFFICE BOX 482 • FORT WORTH, TEXAS 76101

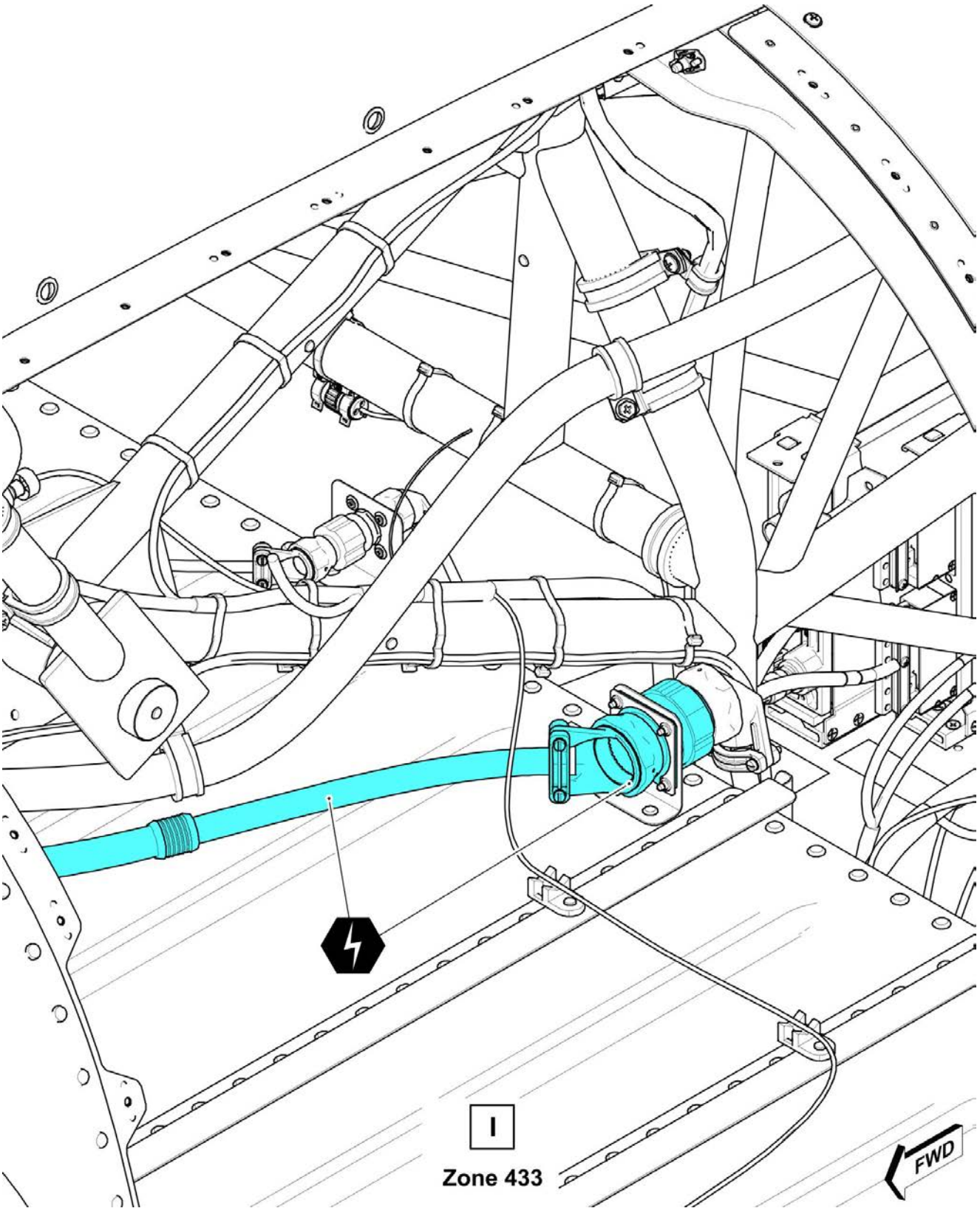

ICN-505-A-054000-B-97499-01705-A-001-01

Figure 2. Internal L/HIRF Inspections - General (Sheet 10 of 27)

POST OFFICE BOX 482 • FORT WORTH, TEXAS 76101

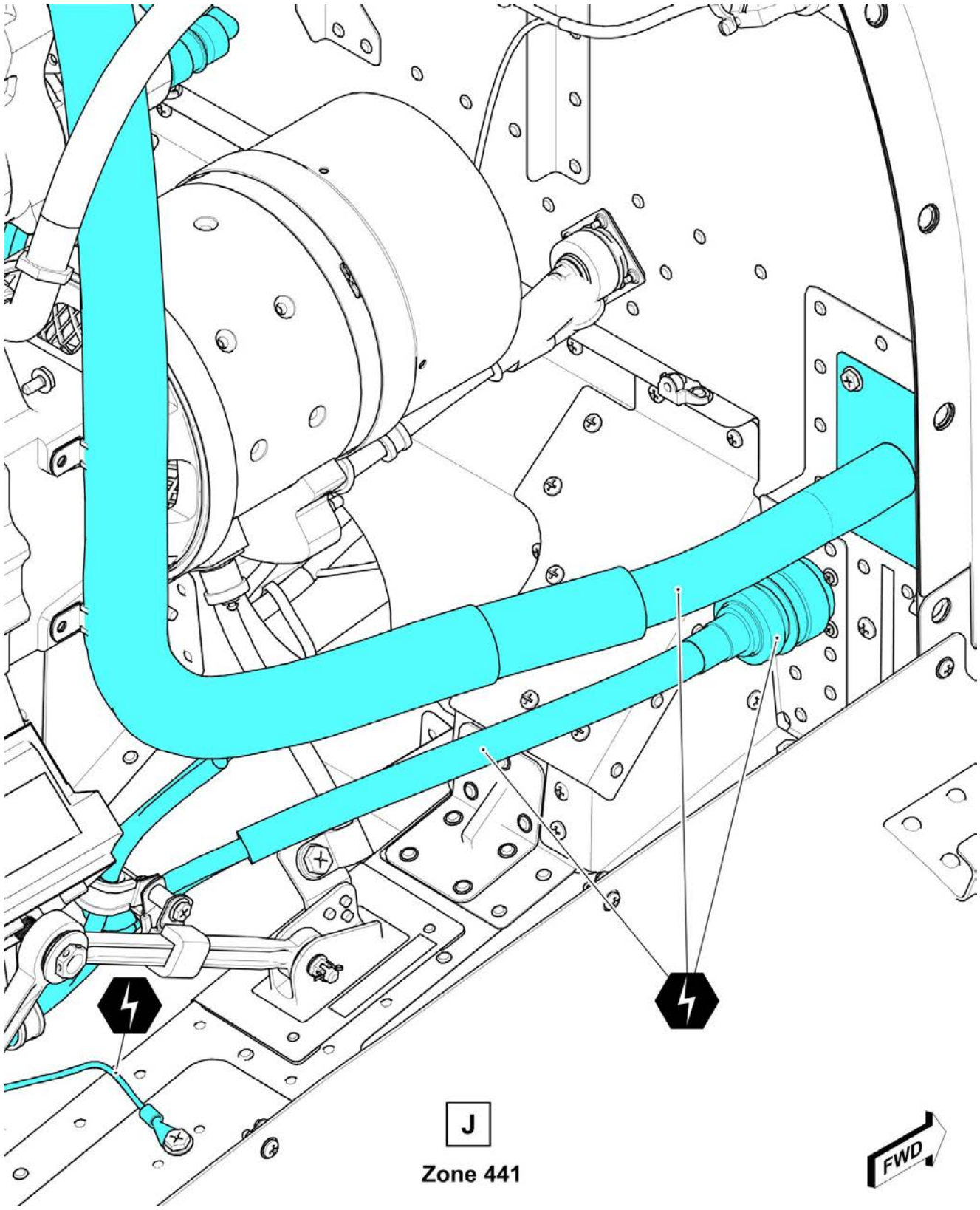

ICN-505-A-054000-B-97499-01708-A-001-01

Figure 2. Internal L/HIRF Inspections - General (Sheet 11 of 27)

POST OFFICE BOX 482 • FORT WORTH, TEXAS 76101

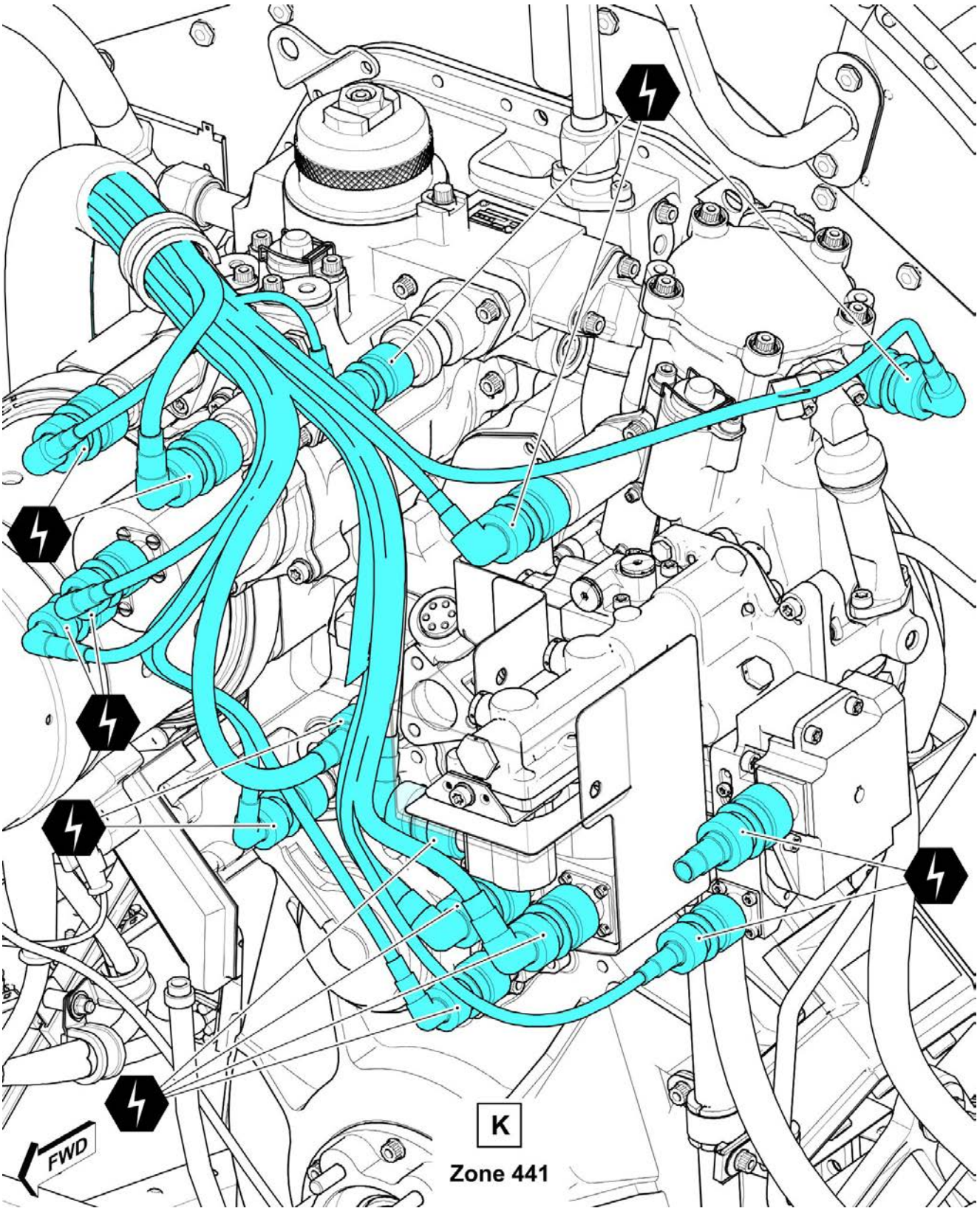

ICN-505-A-054000-B-97499-01709-A-001-01

Figure 2. Internal L/HIRF Inspections - General (Sheet 12 of 27)

POST OFFICE BOX 482 • FORT WORTH, TEXAS 76101

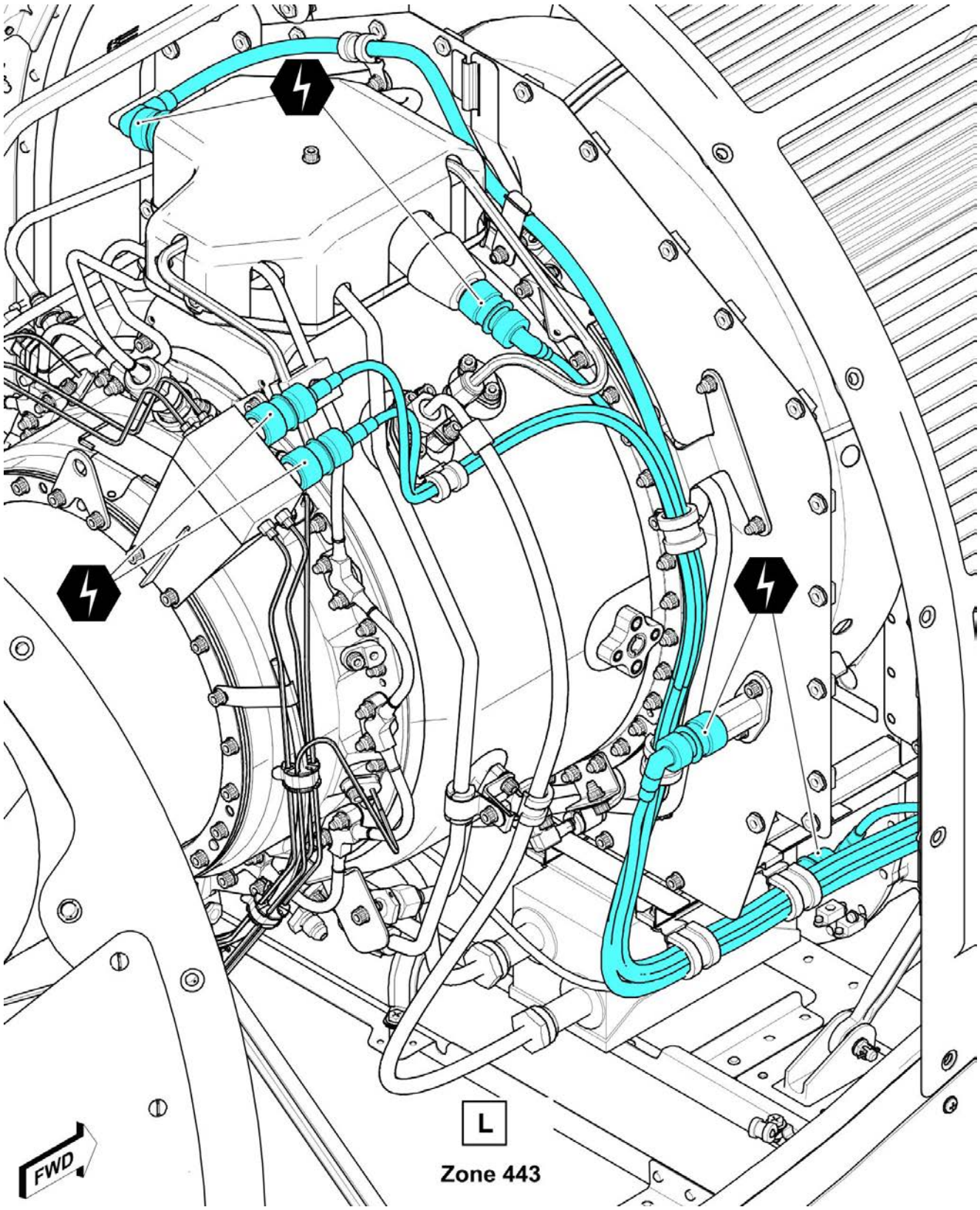

ICN-505-A-054000-B-97499-01710-A-001-01

Figure 2. Internal L/HIRF Inspections - General (Sheet 13 of 27)

POST OFFICE BOX 482 • FORT WORTH, TEXAS 76101

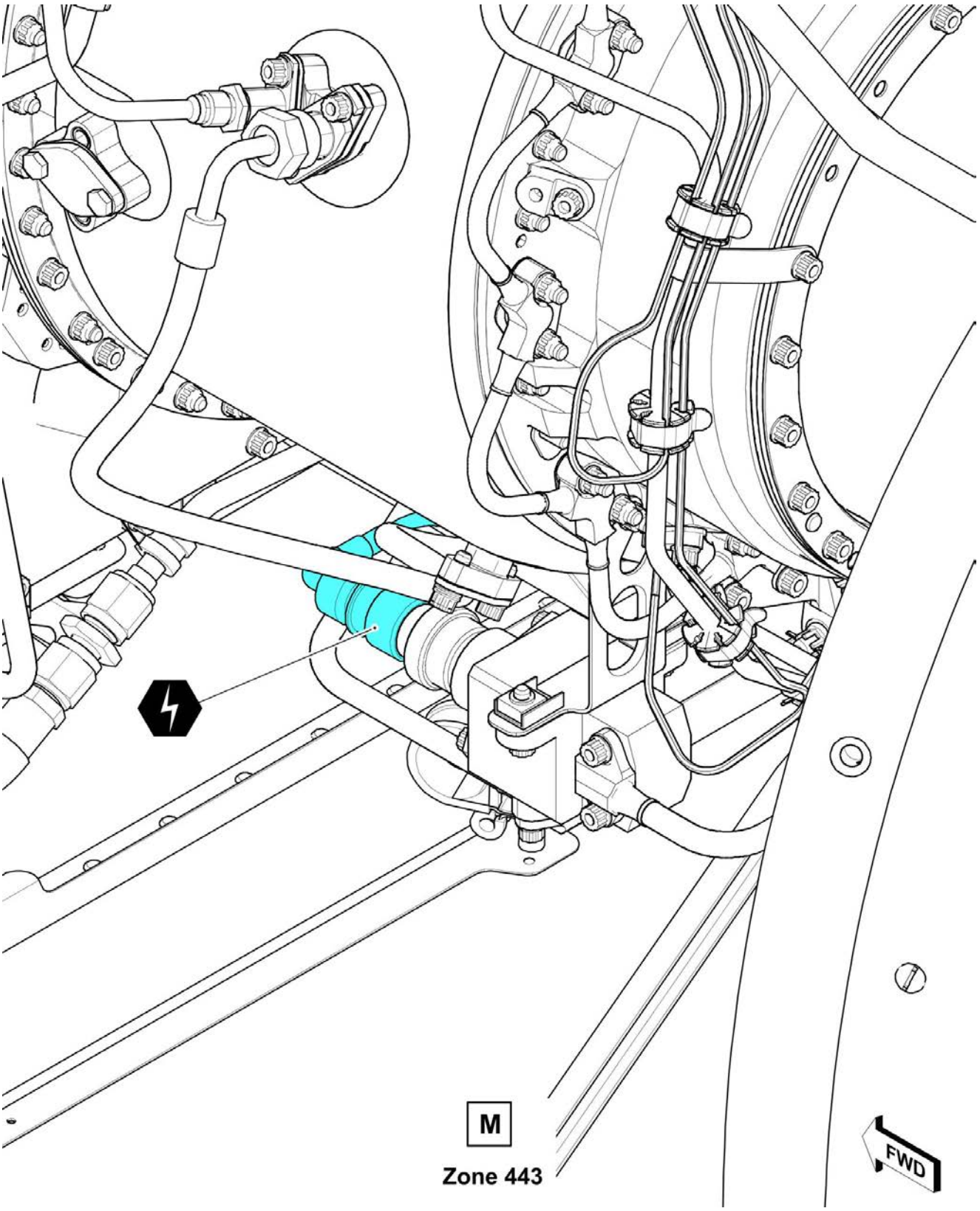

ICN-505-A-054000-B-97499-01711-A-001-01

Figure 2. Internal L/HIRF Inspections - General (Sheet 14 of 27)

POST OFFICE BOX 482 • FORT WORTH, TEXAS 76101

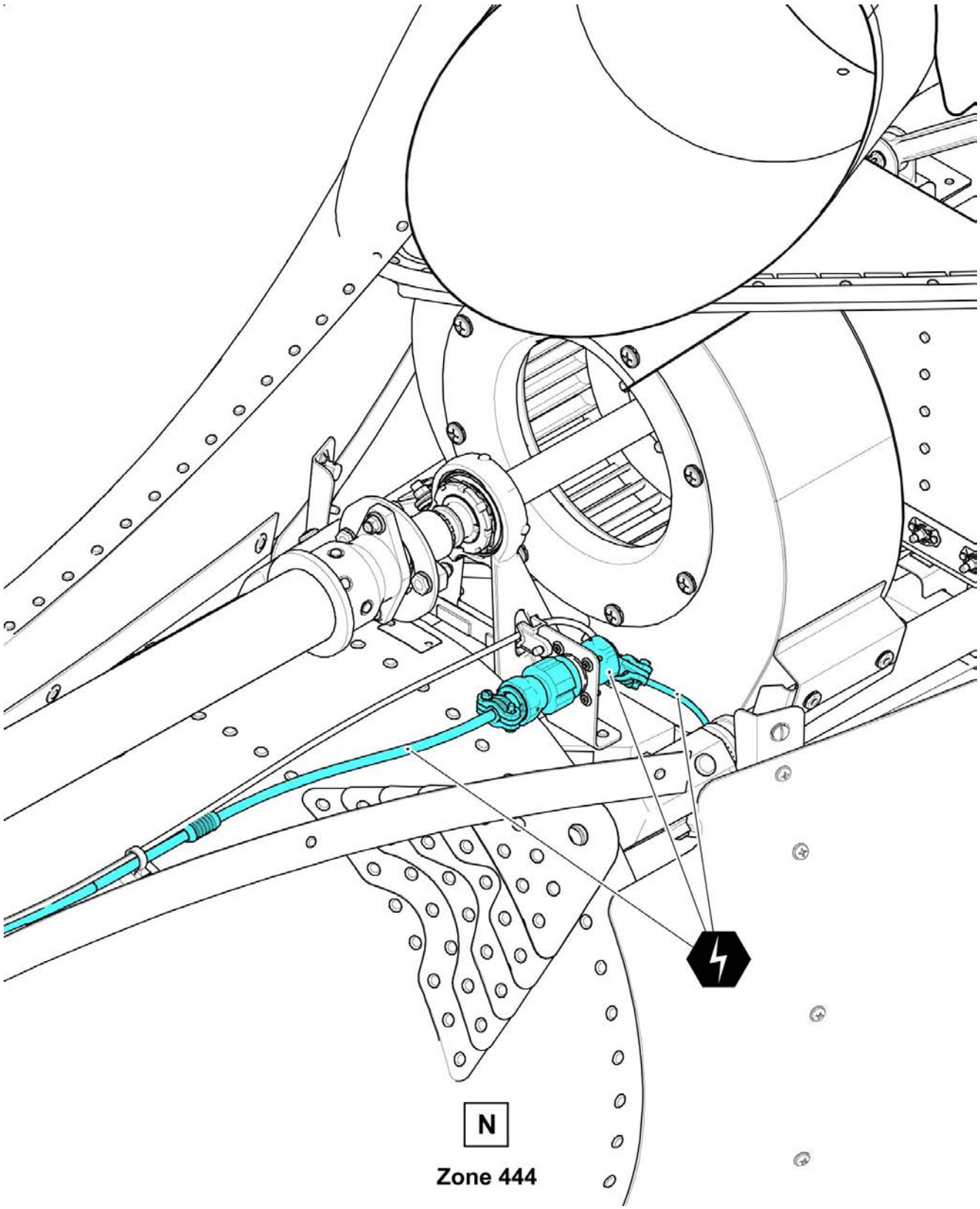

ICN-505-A-054000-B-97499-01712-A-001-01

Figure 2. Internal L/HIRF Inspections - General (Sheet 15 of 27)

POST OFFICE BOX 482 • FORT WORTH, TEXAS 76101

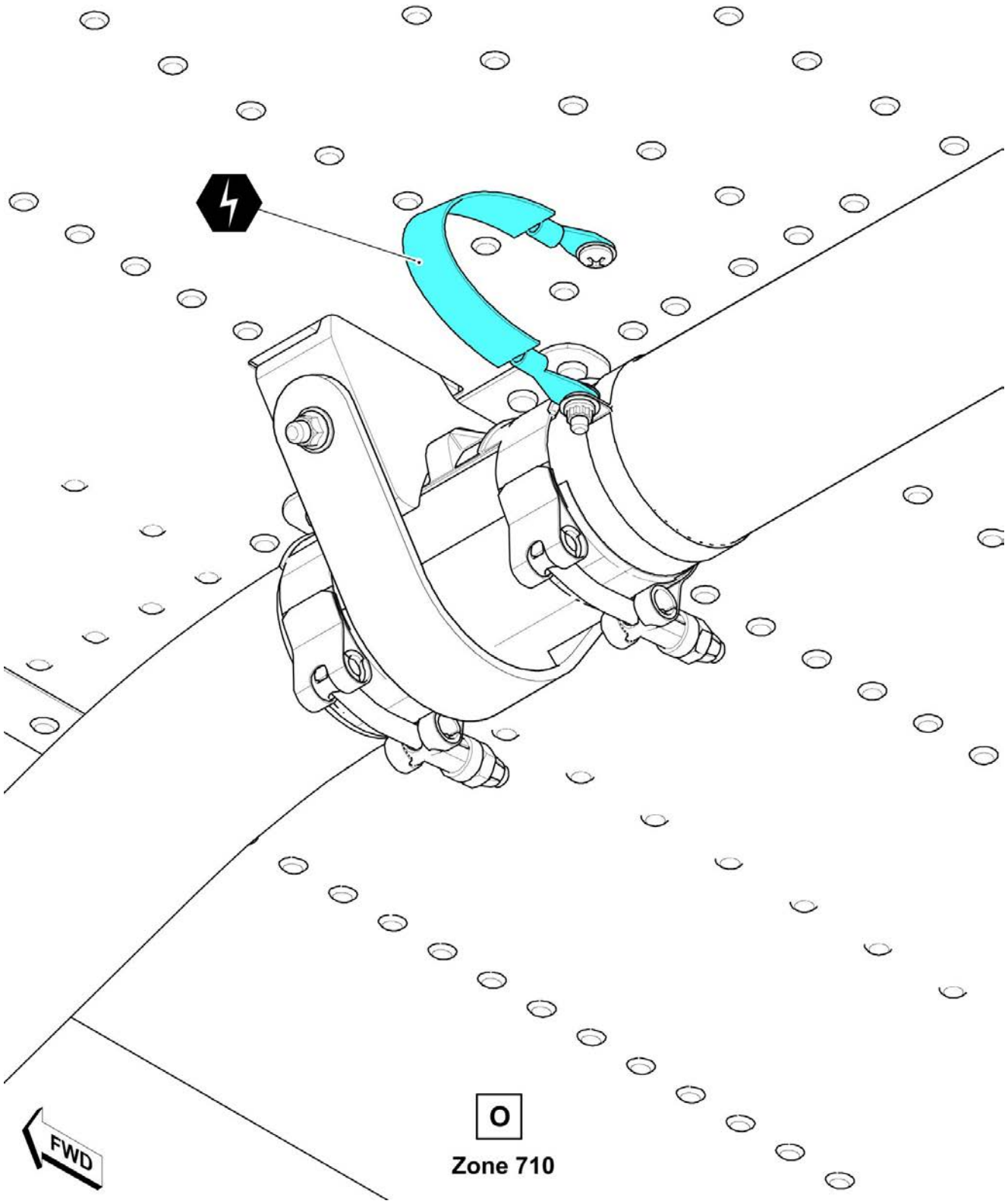

ICN-505-A-054000-B-97499-01713-A-001-01

Figure 2. Internal L/HIRF Inspections - General (Sheet 16 of 27)

POST OFFICE BOX 482 • FORT WORTH, TEXAS 76101

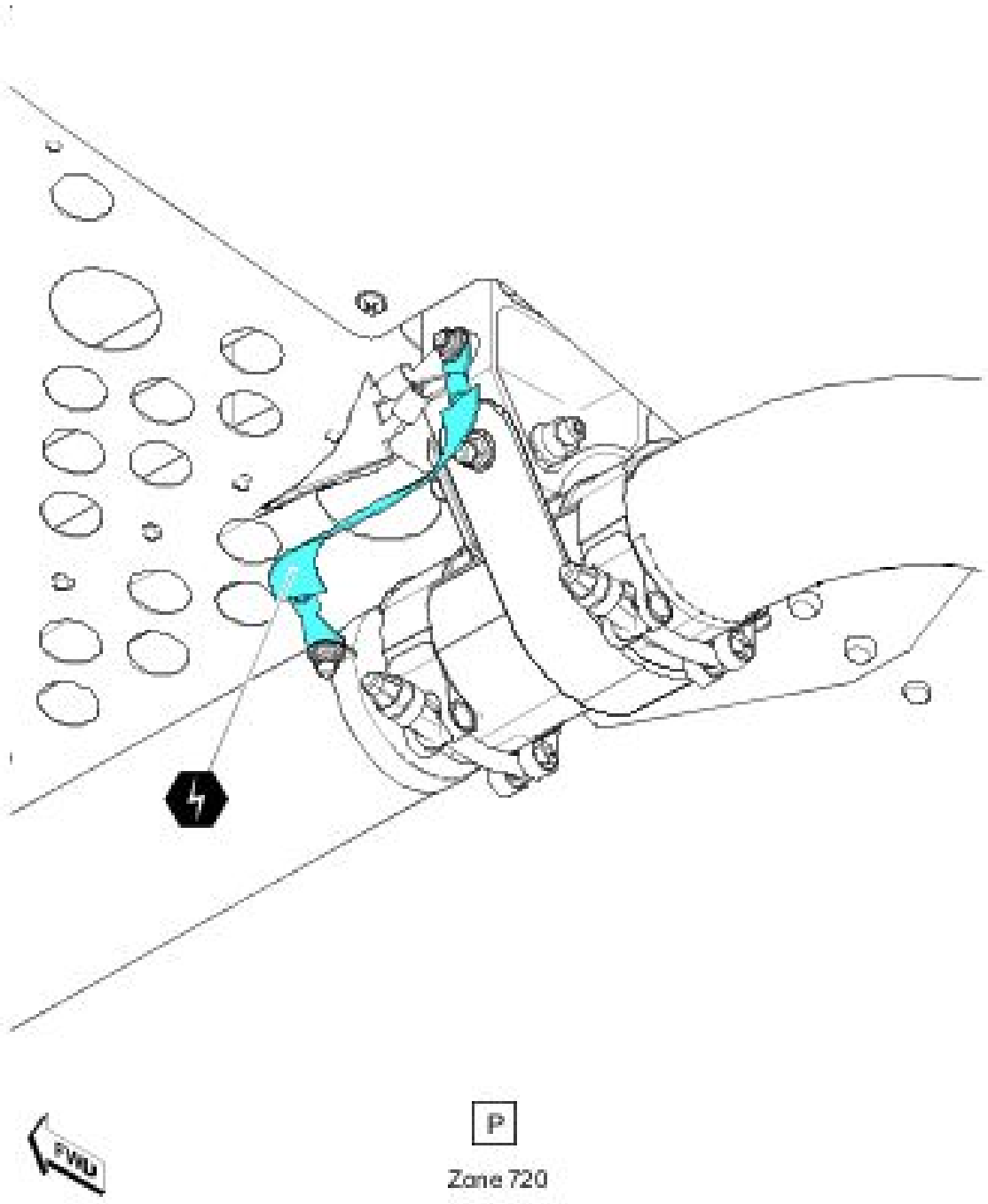

ICN-505-A-054000-B-97499-01714-A-001-01

Figure 2. Internal L/HIRF Inspections - General (Sheet 17 of 27)

POST OFFICE BOX 482 • FORT WORTH, TEXAS 76101

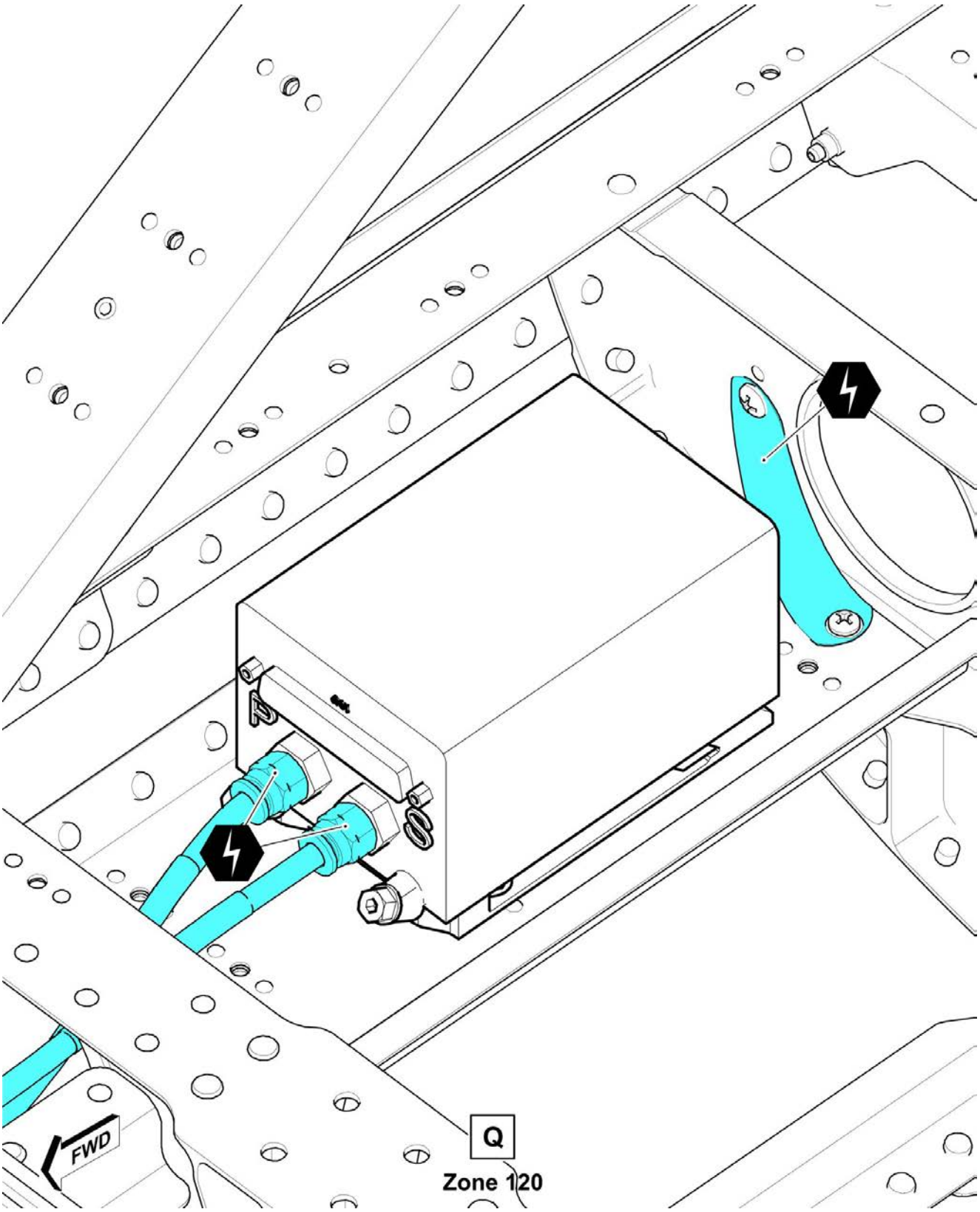

ICN-505-A-054000-B-97499-01984-A-01-1

Figure 2. Internal L/HIRF Inspections - General (Sheet 18 of 27)

POST OFFICE BOX 482 • FORT WORTH, TEXAS 76101

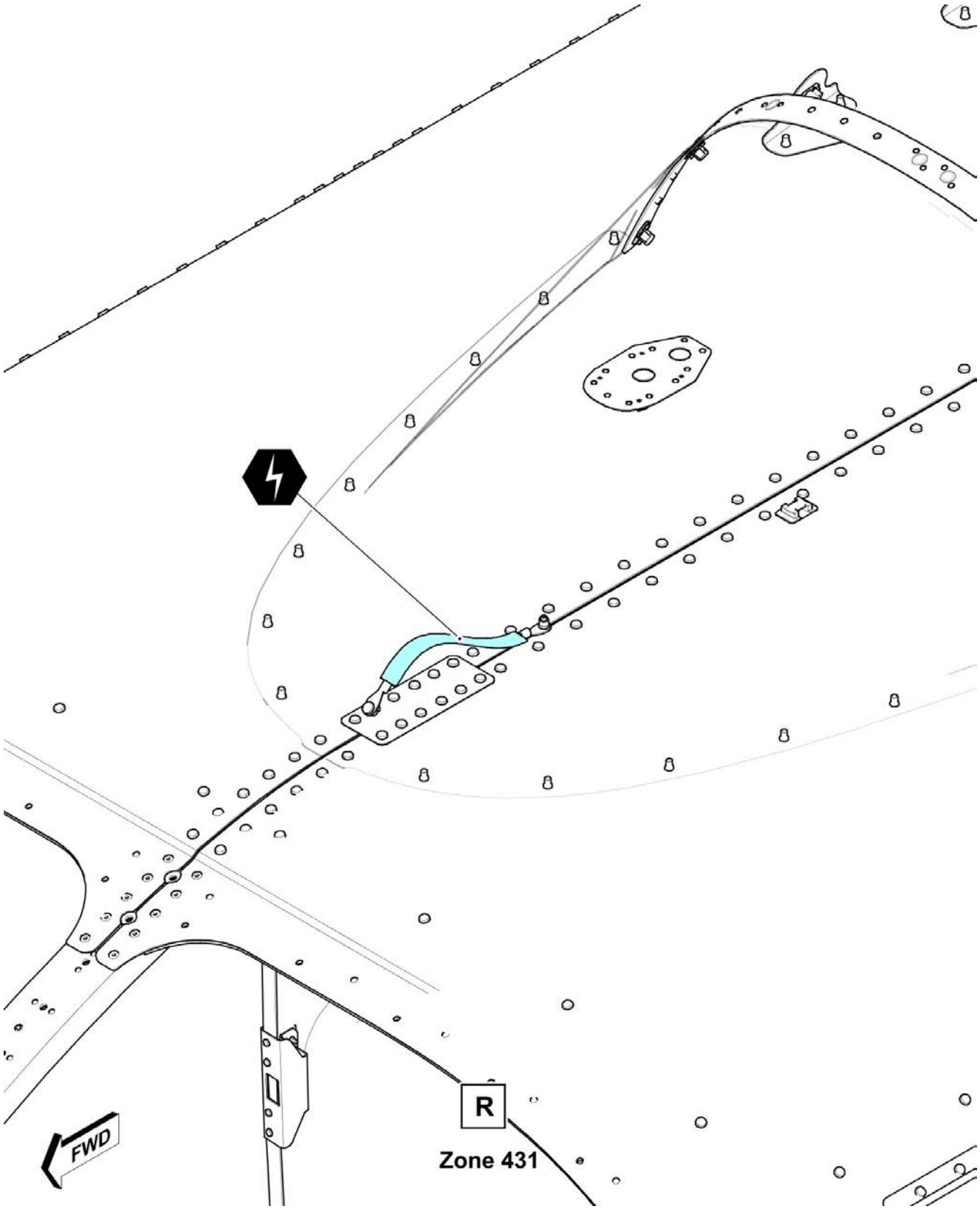

ICN-505-A-054000-B-97499-01985-A-01-1

Figure 2. Internal L/HIRF Inspections - General (Sheet 19 of 27)

POST OFFICE BOX 482 • FORT WORTH, TEXAS 76101

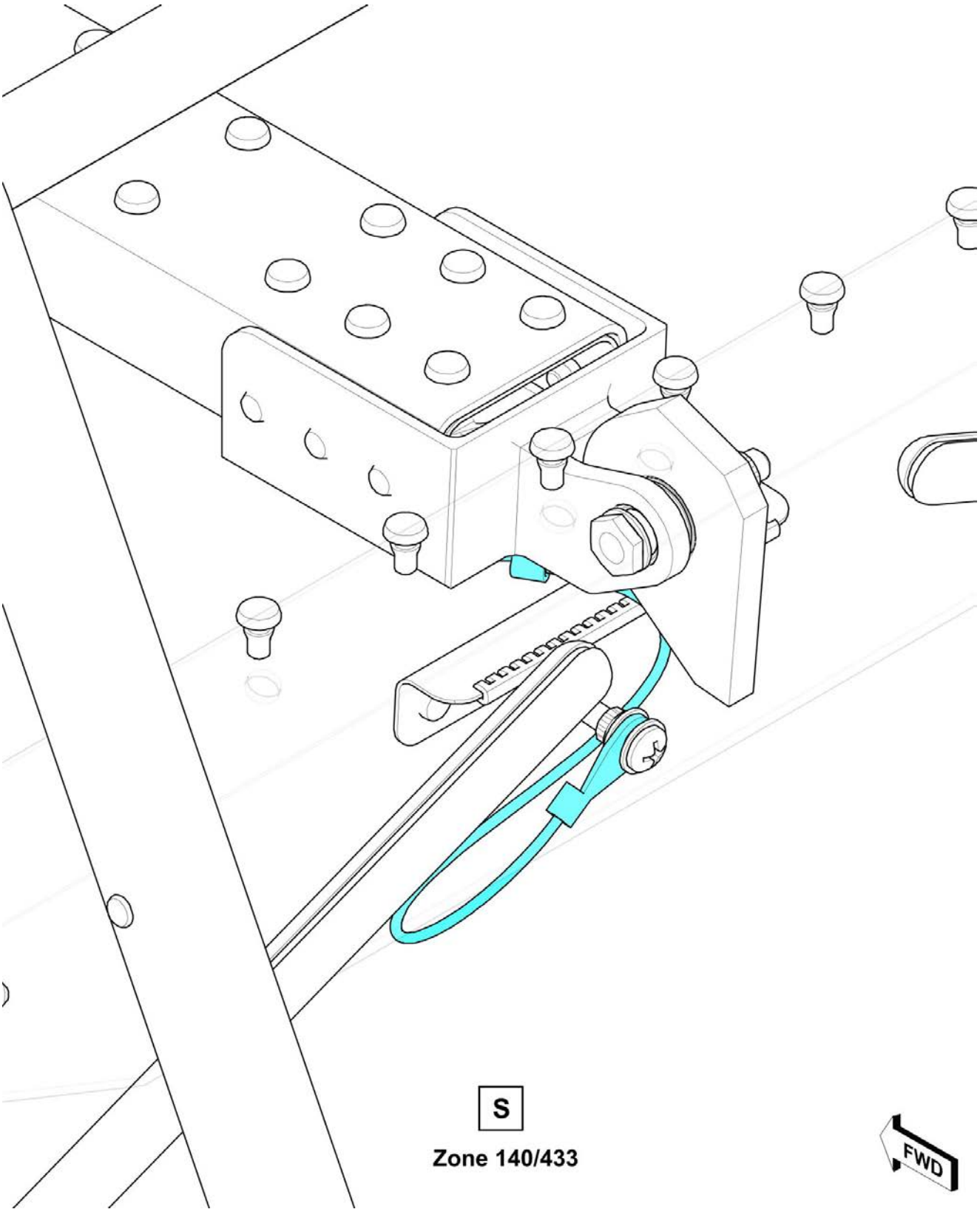

ICN-505-A-054000-B-97499-01986-A-01-1

Figure 2. Internal L/HIRF Inspections - General (Sheet 20 of 27)

POST OFFICE BOX 482 • FORT WORTH, TEXAS 76101

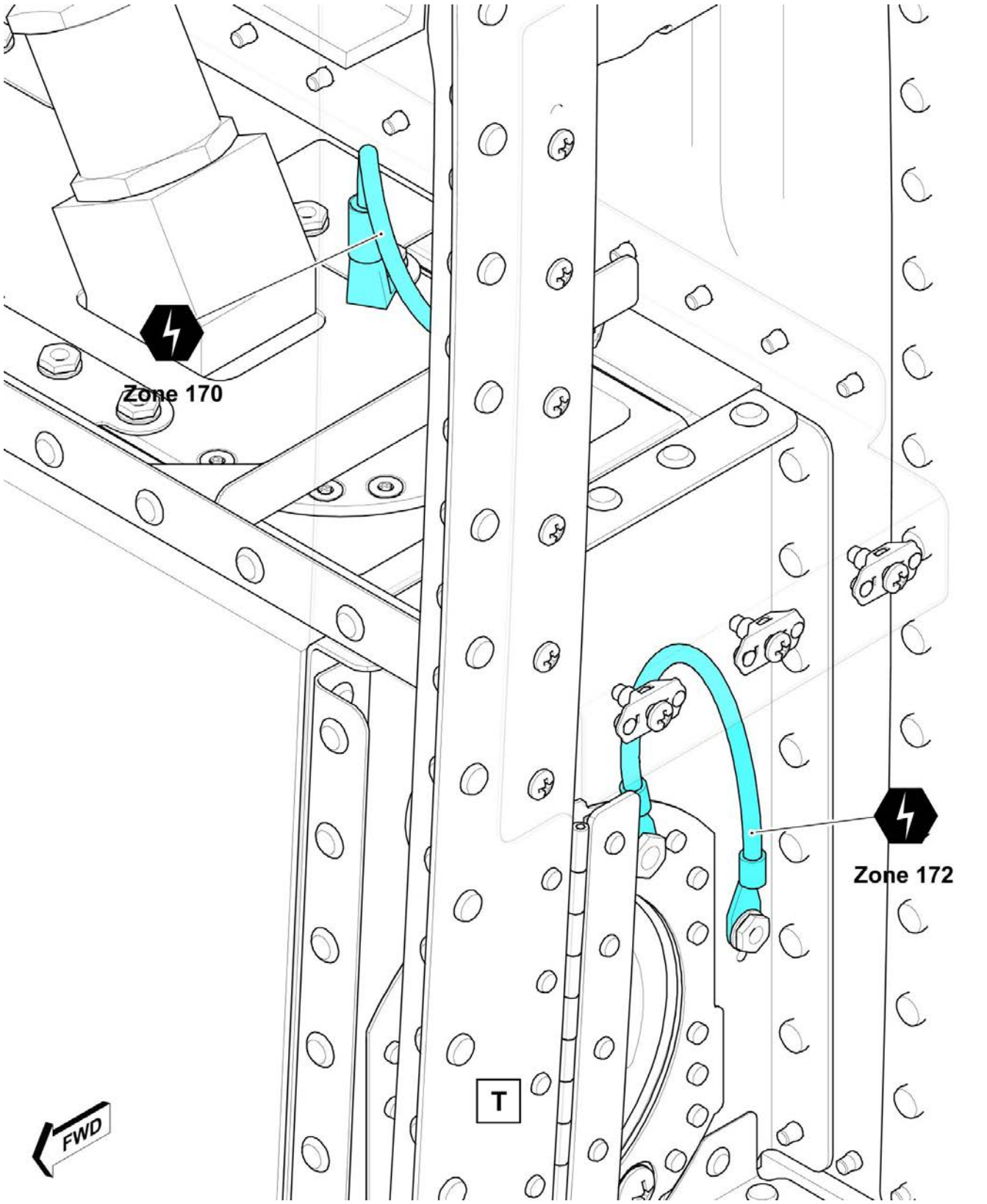

ICN-505-A-054000-B-97499-01987-A-01-1

Figure 2. Internal L/HIRF Inspections - General (Sheet 21 of 27)

POST OFFICE BOX 482 • FORT WORTH, TEXAS 76101

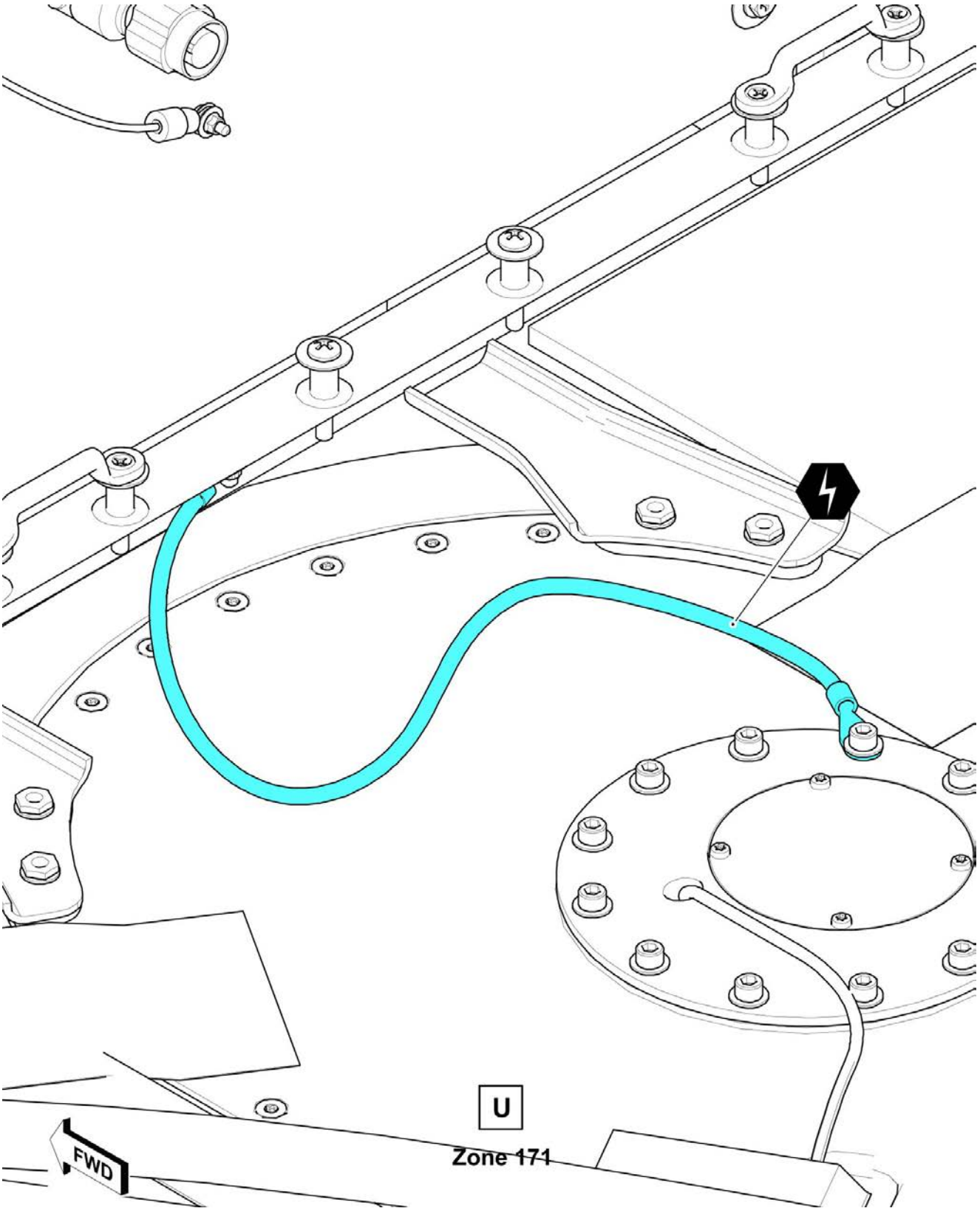

ICN-505-A-054000-B-97499-01988-A-01-1

Figure 2. Internal L/HIRF Inspections - General (Sheet 22 of 27)

POST OFFICE BOX 482 • FORT WORTH, TEXAS 76101

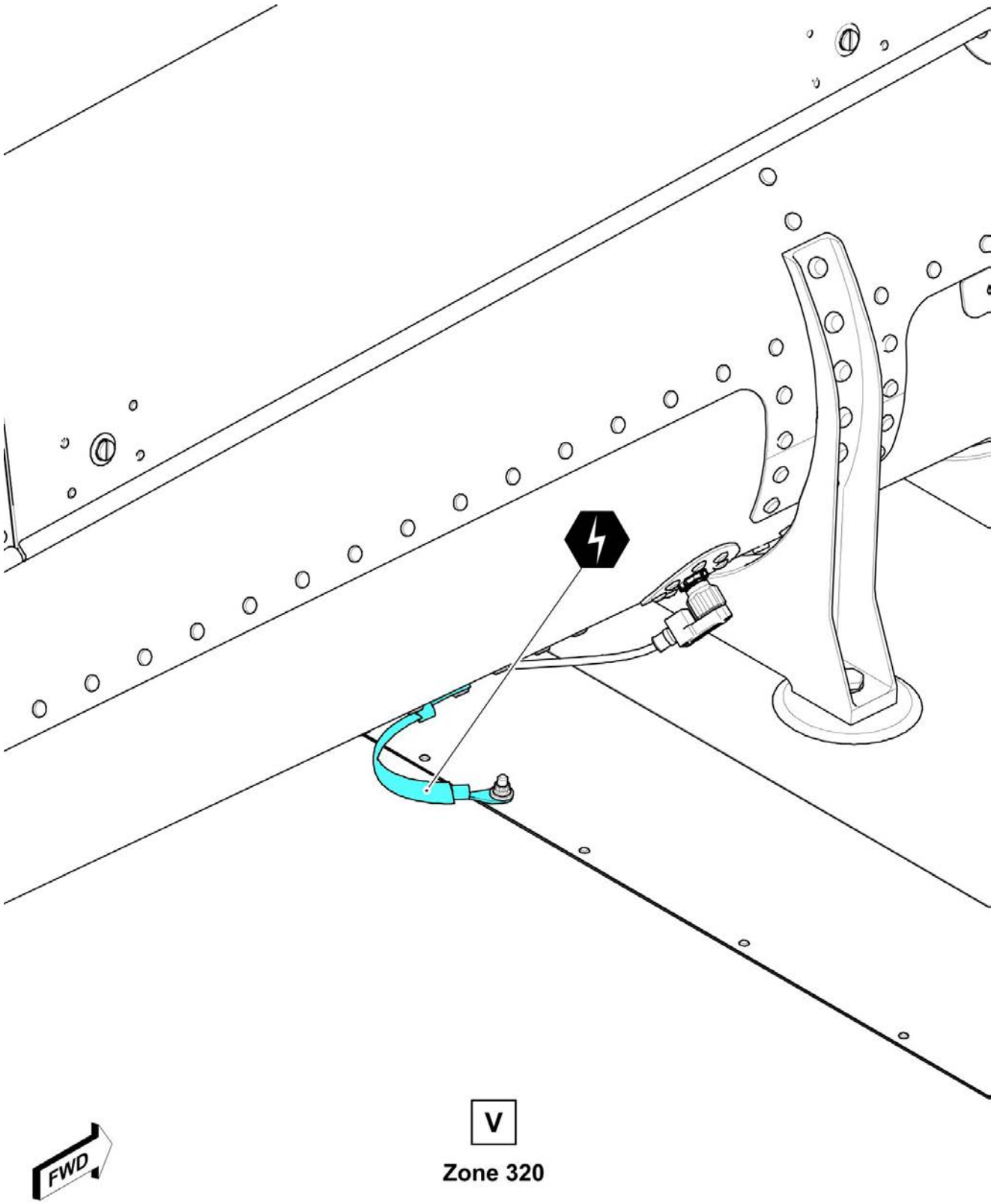

ICN-505-A-054000-B-97499-01989-A-01-1

Figure 2. Internal L/HIRF Inspections - General (Sheet 23 of 27)

POST OFFICE BOX 482 • FORT WORTH, TEXAS 76101

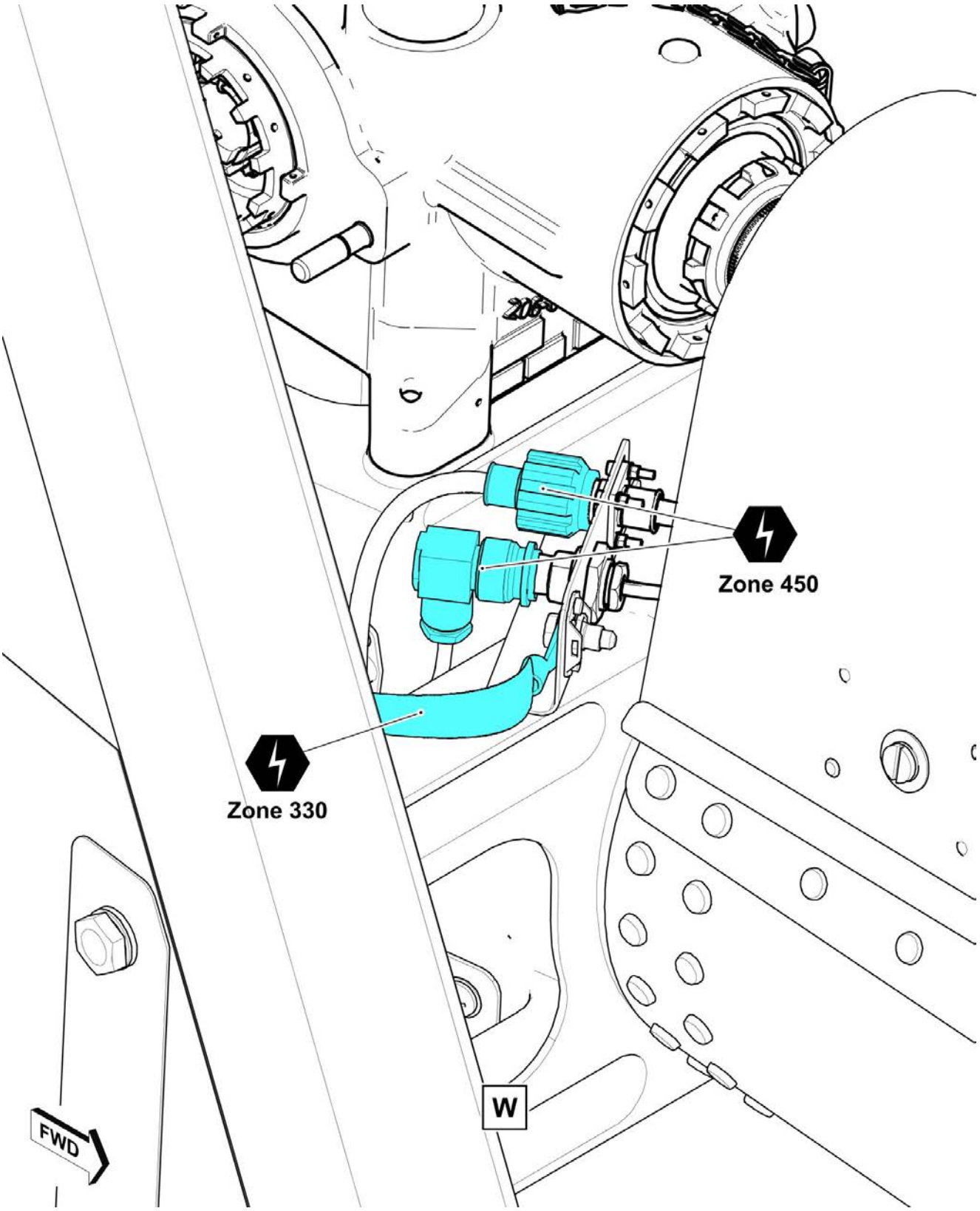

ICN-505-A-054000-B-97499-01990-A-01-1

Figure 2. Internal L/HIRF Inspections - General (Sheet 24 of 27)

POST OFFICE BOX 482 • FORT WORTH, TEXAS 76101

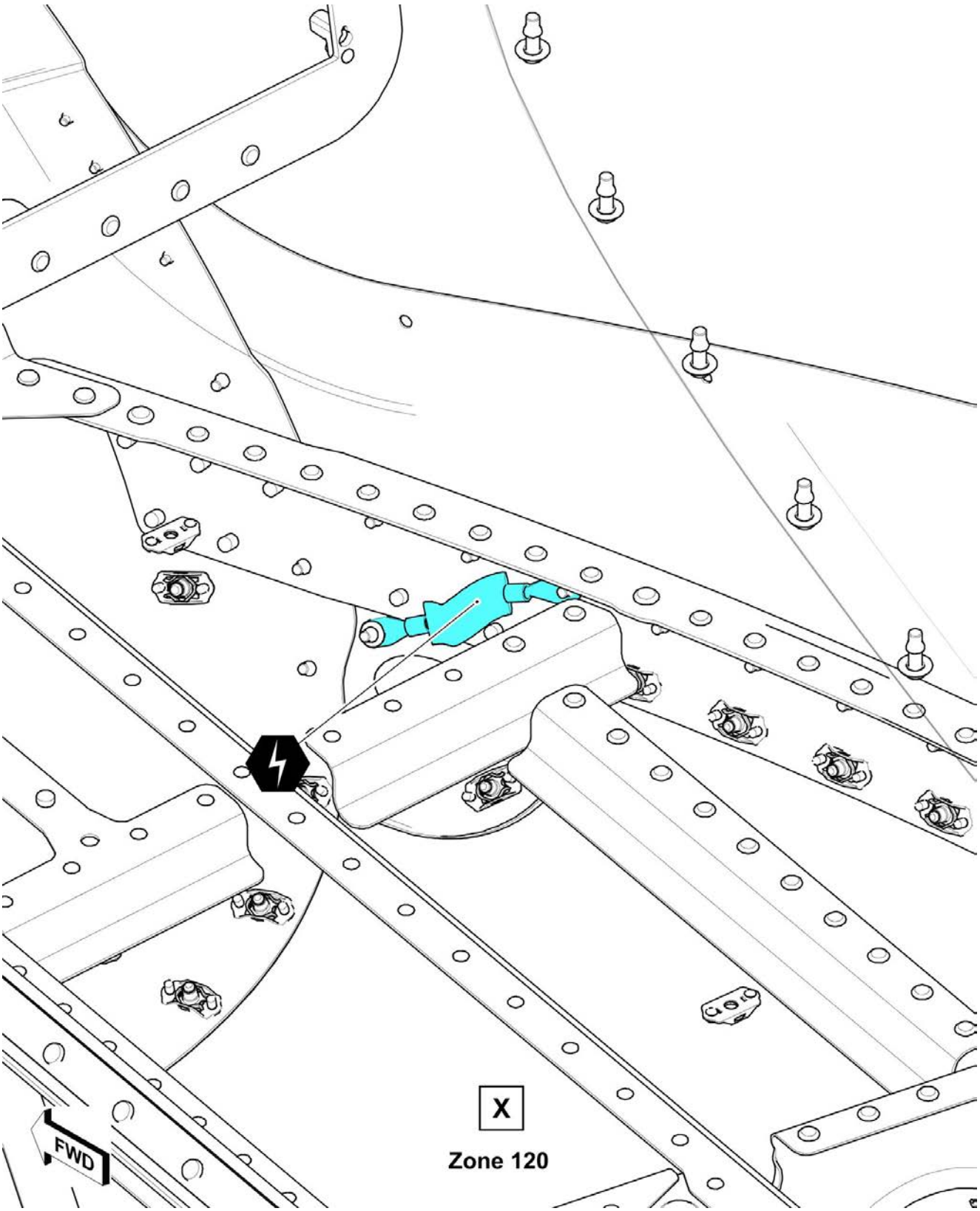

ICN-505-A-054000-B-97499-01991-A-01-1

Figure 2. Internal L/HIRF Inspections - General (Sheet 25 of 27)

POST OFFICE BOX 482 • FORT WORTH, TEXAS 76101

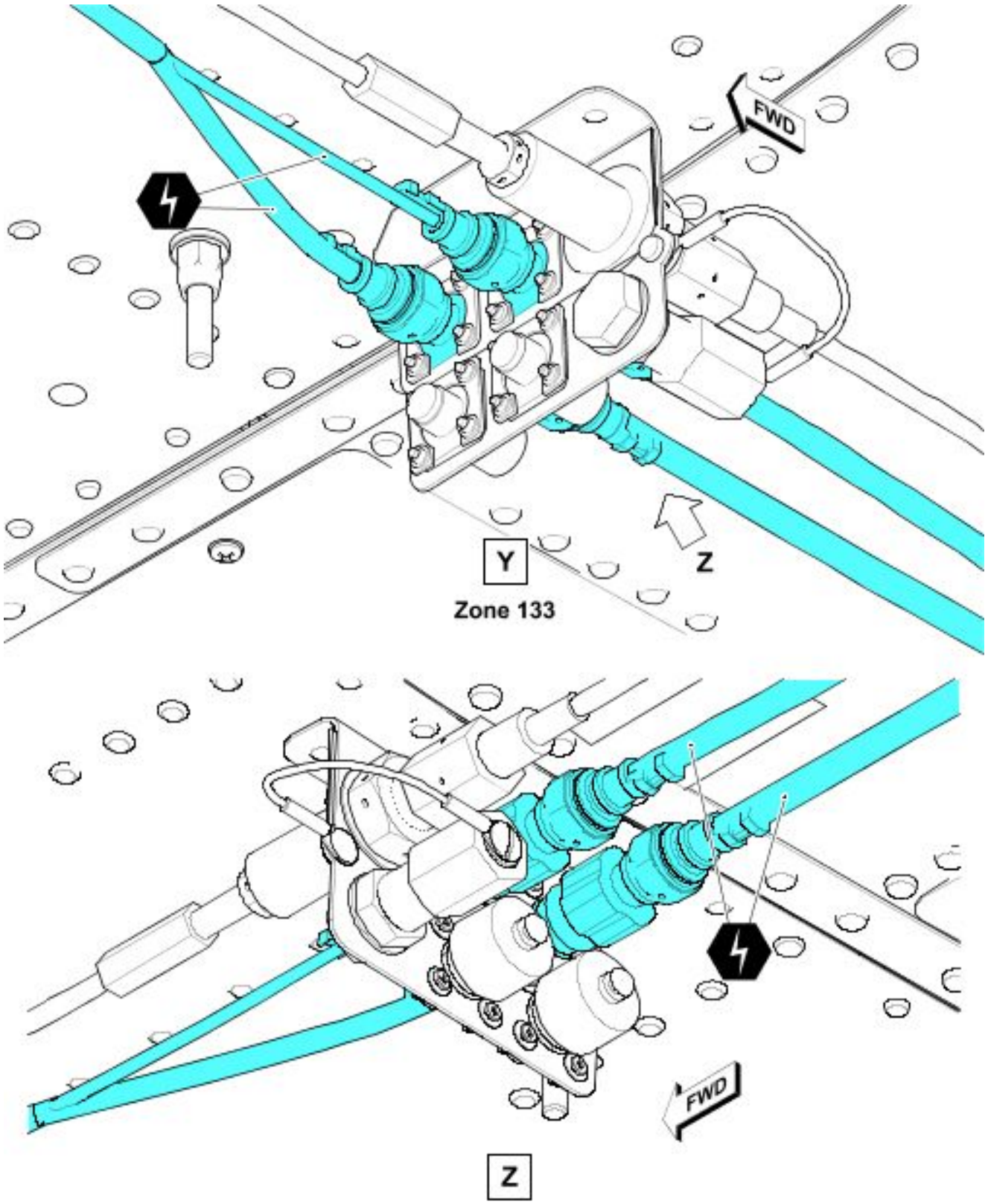

ICN-505-A-054000-B-97499-02629-A-001-01

Figure 2. Internal L/HIRF Inspections - General (Sheet 26 of 27)

POST OFFICE BOX 482 • FORT WORTH, TEXAS 76101

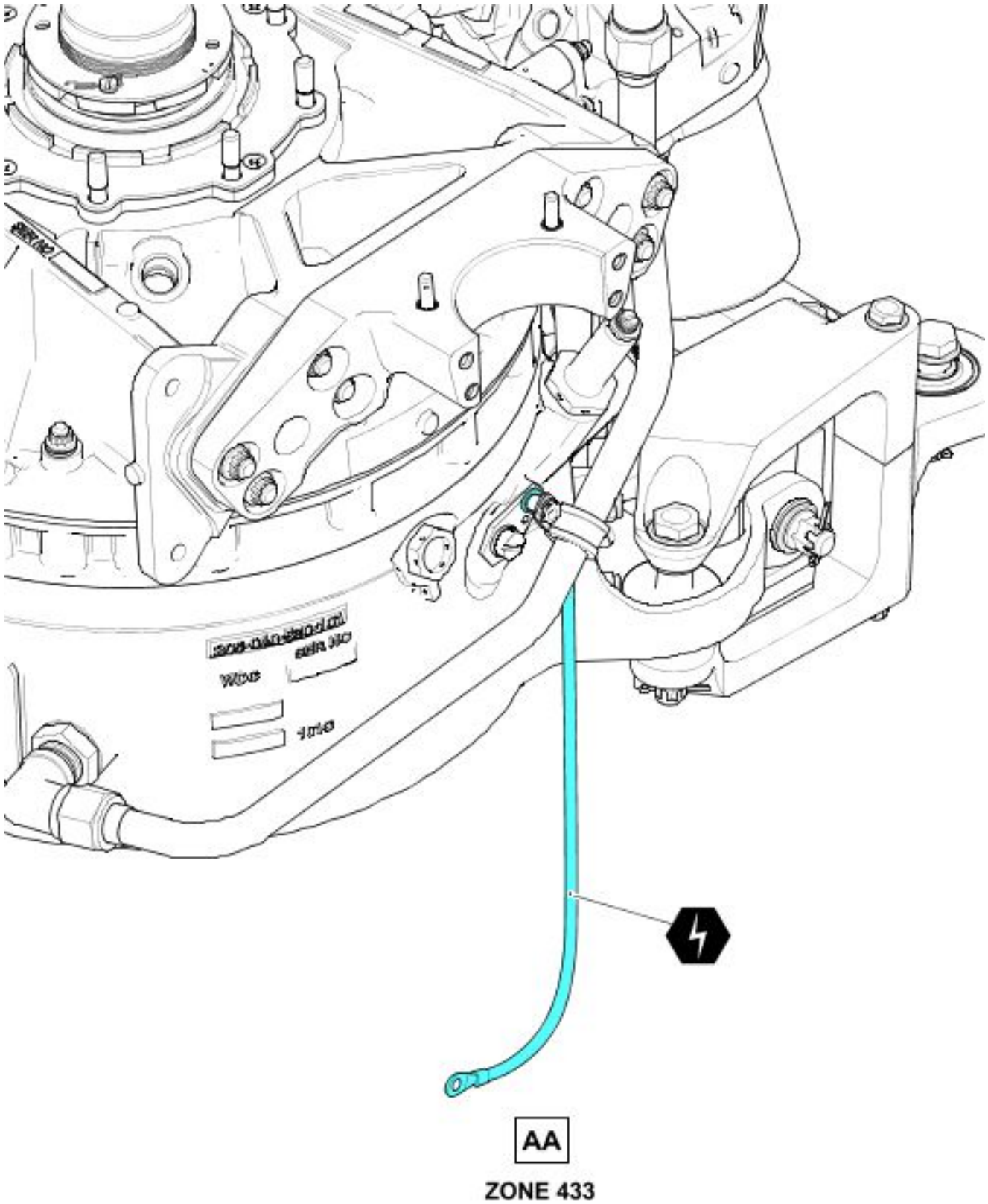

ICN-505-A-054000-B-97499-02630-A-001-01

Figure 2. Internal L/HIRF Inspections - General (Sheet 27 of 27)

POST OFFICE BOX 482 • FORT WORTH, TEXAS 76101

Intentionally blank page

POST OFFICE BOX 482 • FORT WORTH, TEXAS 76101

50 flight hours/1 year inspection - Function, data for plans and description

NOTE

Complete the inspection each 50 hours of operation time or 1 year, whichever occurs first.

NOTE

Refer to 505-A-06-30-00-00A-030A-A for the identification and complete description of the zones.

Table 1. 50 flight hours/1 year inspection

Task No.	Task type	Task description	Reference (DMC)	Zone	Access	Initials
64-10-00-002	LUB	Lubricate the needle bearings of the tail rotor hub assembly.	505-A-12-20-10-00A-242A-A	460	N/A	
63-32-00-001	DET	**NOTE** *Only applicable to P/N SLS-030-910-109.* Do a detailed inspection of the restraint assembly.	505-A-63-30-01-00A-281A-A	433	433AL, 433BR	

POST OFFICE BOX 482 • FORT WORTH, TEXAS 76101

Intentionally blank page

POST OFFICE BOX 482 • FORT WORTH, TEXAS 76101

100 flight hours/6 months inspection - Function, data for plans and description

NOTE

Complete the inspection each 100 hours of operation time or 6 months, whichever occurs first.

NOTE

Refer to 505-A-06-30-00-00A-030A-A for the identification and complete description of the zones.

Refer to 505-A-06-40-00-00A-030A-A for the identification and complete description of the access panels.

Table 1. 100 flight hours/6 months inspection

Task No.	Task type	Task description	Reference (DMC)	Zone	Access	Ini-tials
63-11-00-001	DET	Do a detailed inspection of the main driveshaft.	505-A-63-10-01-00A-281A-A	441	432AL, 432BR, 432CZ, 441AT	

POST OFFICE BOX 482 • FORT WORTH, TEXAS 76101

Intentionally blank page

POST OFFICE BOX 482 • FORT WORTH, TEXAS 76101

100 flight hours/1 year inspection - Function, data for plans and description

NOTE

Complete the inspection each 100 hours of operation time or 1 year, whichever occurs first.

NOTE

Refer to 505-A-06-30-00-00A-030A-A for the identification and complete description of the zones.

Refer to 505-A-06-40-00-00A-030A-A for the identification and complete description of the access panels.

Table 1. 100 flight hours/1 year inspection

Task No.	Task type	Task description	Reference (DMC)	Zone	Access	Initials
29-10-00-008	SVC	**NOTE** The 100 flight hours/1 year inspection is only applicable if the hydraulic pump P/N M206-20H030-043 is installed for the first time or replaced. Replace the system hydraulic fluid.	505-A-12-10-02-00A-218A-A, 505-A-12-10-02-00A-228A-A	432, 433	432 BR, 433BR	
29-10-00-009	DIS	**NOTE** The 100 flight hours/1 year inspection is only applicable if the hydraulic pump P/N M206-20H030-043 is installed for the first time or replaced. *Discard and replace the hydraulic pressure filter element*	505-A-29-10-09-01A-921A-A	433	433AL	
62-10-00-002	SDI	Do a special detailed inspection of the main rotor blades.	505-A-62-10-01-00A-281A-A	410	N/A	

POST OFFICE BOX 482 • FORT WORTH, TEXAS 76101

Intentionally blank page

POST OFFICE BOX 482 • FORT WORTH, TEXAS 76101

100 flight hours/18 months inspection - Function, data for plans and description

NOTE

Refer to 505-A-06-30-00-00A-030A-A for the identification and complete description of the zones.

Table 1. ***100 flight hours/18-month inspection***

Task No.	*Task type*	*Task description*	*Reference (DMC)*	*Zone*	*Access*	*Initials*
63-31-00-002	*DET*	*Do a detailed inspection of the right Liquid Inertia Vibration Eliminator (LIVE) mount unit.*	505-A-18-61-02-00A-281A-A	*432*	*432BR*	
63-31-00-004	*DET*	*Do a detailed inspection of the left Liquid Inertia Vibration Eliminator (LIVE) mount unit.*	505-A-18-61-01-00A-281A-A	*432*	*432AL*	

POST OFFICE BOX 482 • FORT WORTH, TEXAS 76101

Intentionally blank page

POST OFFICE BOX 482 • FORT WORTH, TEXAS 76101

300 flight hours/1 year inspection - Function, data for plans and description

NOTE

Complete the inspection each 300 flight hours of operation time or 1 year, whichever occurs first.

NOTE

Refer to 505-A-06-30-00-00A-030A-A for the identification and complete description of the zones.

Refer to 505-A-06-40-00-00A-030A-A for the identification and complete description of the access panels.

Table 1. 300 flight hours/1 year inspection

Task No.	Task type	Task description	Reference (DMC)	Zone	Access	Initials
21-40-00-001	OPC	Do an operational check of the environmental control heating.	505-A-21-40-00-00A-320A-A	210, 220	210AL, 220AR	
21-50-00-001	GVI	Do a general visual inspection of the drive belt of the air conditioning, if installed.	505-A-21-50-01-00A-281A-A	443	443AT	
21-50-00-002	FNC	Do a functional check (tension check) of the drive belt of the air conditioning, if installed.	Refer to the manufacturer's maintenance manual (BHT-505-AC-120M) in the BHT-505-CMM-V for the procedure and more information.	443	443AT	
29-10-00-005	SVC	Replace the system hydraulic fluid.	505-A-12-10-02-00A-228A-A, 505-A-12-10-02-00A-218A-A	432, 433	432BR, 433BR	
63-20-00-001	SVC	Do the servicing of the transmission assembly.	505-A-12-20-09-00A-200A-A	432, 433	432AL, 433AL, 433BR	
63-20-00-002	GVI	Do a general visual inspection of the transmission assembly.	505-A-63-21-02-00A-281B-A	432, 433	432AL, 432BR, 433AL, 433BR	
63-20-00-005	GVI	Do a general visual inspection of the mast assembly.	505-A-63-21-01-00A-281A-A	420, 432	432AL, 432BR	
63-20-00-014	DIS	Discard and replace the oil filter element of the transmission assembly.	505-A-63-22-03-03A-921A-A	432, 433	432AL, 433AL	
63-20-00-015	RST	Do a restoration (cleaning) of the oil pump inlet screen.	505-A-63-22-02-00A-281A-A	433	433BR	
63-32-00-005	DET	**NOTE** Only applicable to restraint assembly P/N SLS-030-910-115. Do a detailed inspection of the restraint assembly.	505-A-63-30-01-00A-281B-A	433	433AL, 433BR	
64-10-00-003	GVI	Do a general visual inspection of the tail rotor hub and tail rotor blade assemblies.	505-A-64-10-01-00A-281A-A, 505-A-64-20-01-00A-281A-A	460, 470	N/A	
65-10-00-002	LUB	Lubricate the bearings of the fan shaft assembly.	505-A-12-20-06-00A-242A-A	444	444AT	
65-10-00-005	LUB	Lubricate the bearings of the driveshaft segments.	505-A-12-20-07-00A-242A-A	450	450AT, 450BT, 450CT	
65-10-00-007	LUB	Lubricate the forward adapter of the tail rotor drive.	505-A-12-20-08-00A-242A-A	443, 444	443AT, 444AT	
65-10-00-009	LUB	Lubricate the aft adapters of the tail rotor drive.	505-A-12-20-08-00A-242A-A	443, 444, 450	443AT, 444AT, 450CT	

POST OFFICE BOX 482 • FORT WORTH, TEXAS 76101

Table 1. 300 flight hours/1 year inspection (continued)

Task No.	Task type	Task description	Reference (DMC)	Zone	Access	Initials
65-20-00-001	SVC	Replace the oil of the tail rotor gearbox.	505-A-12-10-04-00A-222A-A, 505-A-12-10-04-00A-212A-A	450	N/A	
65-20-00-002	DET	Do a detailed inspection of the tail rotor gearbox.	505-A-65-20-01-00A-281C-A	450	N/A	
67-10-00-032	FNC	Do a functional check of the bypass spool valve of the servo-actuators.	505-A-67-30-00-00A-340A-A	432	432AL, 432BR	
79-22-00-002	SVC	**NOTE** *The 300 flight hours/1 year inspection is only applicable if the helicopter is used in a sandy environment or if using 3cST, ASTO 560, ROYCO 560, or BPTO 2380 oil. If not, replace the oil at the 600 flight hours/2 years inspection.* Replace the oil of the engine oil system.	505-A-12-10-05-00A-222A-A, 505-A-12-10-05-00A-212A-A	191, 432	191AL, 432AL	

POST OFFICE BOX 482 • FORT WORTH, TEXAS 76101

400 flight hours/1 year inspection - Function, data for plans and description

NOTE

Complete the inspection each 400 hours of operation time or 1 year, whichever occurs first.

NOTE

Refer to 505-A-06-30-00-00A-030A-A for the identification and complete description of the zones.

Refer to 505-A-06-40-00-00A-030A-A for the identification and complete description of the access panels.

Table 1. 400 flight hours/1 year inspection

Task No.	Task type	Task description	Reference (DMC)	Zone	Access	Ini-tials
71-60-00-001	DET	Do a detailed inspection of the filters of the Inlet Barrier Filter (IBF) assembly.	505-A-75-50-01-01A-281A-A	442	441AT, 443AT	

POST OFFICE BOX 482 • FORT WORTH, TEXAS 76101

Intentionally blank page

POST OFFICE BOX 482 • FORT WORTH, TEXAS 76101

600 flight hours/1 year inspection - Function, data for plans and description

NOTE

Complete the inspection each 600 hours of operation time or 1 year, whichever occurs first.

NOTE

Refer to 505-A-06-30-00-00A-030A-A for the identification and complete description of the zones.

Refer to 505-A-06-40-00-00A-030A-A for the identification and complete description of the access panels.

Table 1. 600 flight hours/1 year inspection

Task No.	Task type	Task description	Reference (DMC)	Zone	Access	Ini-tials
28-20-00-001	OPC	Do an operational check of the fuel shutoff valve in the distribution system.	505-A-28-20-00-00A-320A-A	200, 430	210AL, 220AR, 432AL	

POST OFFICE BOX 482 • FORT WORTH, TEXAS 76101

Intentionally blank page

POST OFFICE BOX 482 • FORT WORTH, TEXAS 76101

600 flight hours/2 years inspection - Function, data for plans and description

NOTE

Complete the inspection each 600 hours of operation time or 2 years, whichever occurs first.

NOTE

Refer to 505-A-06-30-00-00A-030A-A for the identification and complete description of the zones.

Refer to 505-A-06-40-00-00A-030A-A for the identification and complete description of the access panels.

Table 1. 600 flight hours/2 years inspection

Task No.	Task type	Task description	Reference (DMC)	Zone	Access	Initials
79-22-00-001	DIS	Discard the oil filter element of the engine.	Refer to the manufacturer's maintenance manual for the remove and install procedures. www.turbomeca-support.com/	441	441AT	
79-22-00-002	SVC	Replace the oil of the engine oil system.	505-A-12-10-05-00A-222A-A, 505-A-12-10-05-00A-212A-A	*191, 432*	*191AL, 432AL*	

POST OFFICE BOX 482 • FORT WORTH, TEXAS 76101

Intentionally blank page

POST OFFICE BOX 482 • FORT WORTH, TEXAS 76101

600 flight hours/3 years inspection - Function, data for plans and description

NOTE

Complete the inspection each 600 hours of operation time or 3 years, whichever occurs first.

NOTE

Refer to 505-A-06-30-00-00A-030A-A for the identification and complete description of the zones.

Refer to 505-A-06-40-00-00A-030A-A for the identification and complete description of the access panels.

Table 1. 600 flight hours/3 years inspection

Task No.	Task type	Task description	Reference (DMC)	Zone	Access	Initials
62-20-00-013	DET	Do a detailed inspection of the mast nut.	505-A-62-20-00-01A-281A-A	420	N/A	
62-20-00-014	DET	Do a detailed inspection of the cone set.	505-A-62-20-00-02A-281A-A	420	N/A	
62-20-00-015	DET	Do a detailed inspection of the yoke.	505-A-62-20-01-16A-281A-A	420	N/A	
62-20-00-017	DET	Do a detailed inspection of the mast nut lock.	505-A-62-20-00-03A-281A-A	420	N/A	
62-20-00-018	DET	Do a detailed inspection of the main rotor grips.	505-A-62-20-01-04A-281A-A	420	N/A	
62-20-00-019	DET	Do a detailed inspection of the blade bolts.	505-A-62-10-00-01A-281A-A	420	N/A	
62-20-00-020	DET	Do a detailed inspection of the blade latches.	505-A-62-20-01-02A-281A-A	420	N/A	
62-20-00-021	DET	Do a detailed inspection of the pitch horn assemblies.	505-A-62-20-01-05A-281A-A	420	N/A	
62-20-00-022	DET	Do a detailed inspection of the pillow block assemblies.	505-A-62-20-01-09A-281A-A	420	N/A	
62-20-00-023	DET	Do a detailed inspection of the trunnion.	505-A-62-20-01-11A-281A-A	420	N/A	
62-20-00-024	DET	Do a detailed inspection of the trunnion bearings.	505-A-62-20-01-01A-281A-A	420	N/A	
63-12-00-002	DET	Do a detailed inspection of the freewheel assembly.	505-A-63-10-02-00A-281B-A	441, 443	441AT, 443AT	
67-10-00-001	DET	Do a detailed inspection of the pilot cyclic stick and grip assembly.	505-A-67-12-01-00A-281A-A	124	120AB	
67-10-00-002	DET	Do a detailed inspection of the pilot cyclic stick base fitting assembly.	505-A-67-12-02-00A-281A-A	124	120AB	
67-10-00-003	DET	Do a detailed inspection of the copilot cyclic stick base fitting assembly.	505-A-67-12-03-00A-281A-A	123	120AB	
67-10-00-004	DET	Do a detailed inspection of the cyclic torque tube assembly.	505-A-67-12-04-00A-281A-A	123, 124, 128	120AB	
67-10-00-005	DET	Do a detailed inspection of the cyclic main torque tube assembly.	505-A-67-12-06-00A-281A-A	128, 129, 135, 136, 160	120AB, 130AZ, 160AB	
67-10-00-006	DET	Do a detailed inspection of the cyclic tube support.	505-A-53-10-00-04A-281A-A	123, 128	120AB	
67-10-00-007	DET	Do a detailed inspection of the cyclic tube assembly.	505-A-67-12-07-00A-281A-A	123, 128	120AB	
67-10-00-008	DET	Do a detailed inspection of the collective lever assembly and the cyclic mixer assembly.	505-A-67-11-11-00A-281A-A, 505-A-67-12-09-00A-281A-A	160	160AB	

POST OFFICE BOX 482 • FORT WORTH, TEXAS 76101

Table 1. 600 flight hours/3 years inspection (continued)

Task No.	Task type	Task description	Reference (DMC)	Zone	Access	Initials
67-10-00-009	DET	Do a detailed inspection of the left and right cyclic control tube assembly.	505-A-67-12-10-00A-281A-A, 505-A-67-12-11-00A-281A-A	160, 432	160AB, 432AL, 432BR	
67-10-00-010	DET	Do a detailed inspection of the left cyclic actuator support bellcrank.	505-A-67-12-12-00A-281A-A	432	432AL	
67-10-00-011	DET	Do a detailed inspection of the right cyclic actuator support bellcrank.	505-A-67-12-13-00A-281A-A	432	432BR	
67-10-00-012	DET	Do a detailed inspection of the actuator supports.	505-A-67-30-02-00A-281A-A, 505-A-67-30-04-00A-281A-A, 505-A-67-30-06-00A-281A-A	431	432AL, 432BR	
67-10-00-013	DET	Do a detailed inspection of the left and right cyclic boosted link assemblies.	505-A-67-12-14-00A-281A-A, 505-A-67-12-15-00A-281A-A	432	432AL, 432BR	
67-10-00-014	DET	Do a detailed inspection of the left and right cyclic boosted rod assemblies.	505-A-67-12-20-00A-281A-A, 505-A-67-12-21-00A-281A-A	432	432AL, 432BR	
67-10-00-015	*DET*	*Do a detailed inspection of the left cyclic boosted bellcrank assembly and the left cyclic boosted bellcrank support.*	505-A-67-12-16-00A-281A-A, 505-A-67-12-18-00A-281A-A	*432*	*432AL*	
67-10-00-016	*DET*	*Do a detailed inspection of the right cyclic boosted bellcrank assembly and the right cyclic boosted bellcrank support.*	505-A-67-12-17-00A-281A-A, 505-A-67-12-19-00A-281A-A	*432*	*432BR*	
67-10-00-018	DET	Do a detailed inspection of the pilot collective stick and grip assembly.	505-A-67-11-01-00A-281A-A	129	129AZ	
67-10-00-019	DET	Do a detailed inspection of the pilot collective jackshaft assembly.	505-A-67-11-02-00A-281A-A	125, 129	125AZ, 129AZ	
67-10-00-020	DET	Do a detailed inspection of the collective control tube, jackshaft-to-reversing bellcrank.	505-A-67-11-07-00A-281A-A	135	129AZ, 130AZ	
67-10-00-021	DET	Do a detailed inspection of the collective reversing bellcrank assembly.	505-A-67-11-08-00A-281A-A	136	130AZ	
67-10-00-022	DET	Do a detailed inspection of the collective control tube, reversing bellcrank-to-collective lever.	505-A-67-11-10-00A-281A-A	136	130AZ, 160AB	
67-10-00-023	DET	Do a detailed inspection of the collective control tube, lever-to-actuator support bellcrank.	505-A-67-11-12-00A-281A-A	160, 432	160AB, 432AL, 432BR	
67-10-00-024	DET	Do a detailed inspection of the collective actuator support bellcrank.	505-A-67-11-13-00A-281A-A	432	432AL, 432BR	
67-10-00-025	DET	Do a detailed inspection of the collective boosted link assembly.	505-A-67-11-14-00A-281A-A	432	432AL, 432BR	
67-10-00-026	*DET*	*Do a detailed inspection of the collective boosted bellcrank assembly and the collective boosted bellcrank support.*	505-A-67-11-15-00A-281A-A, 505-A-67-11-16-00A-281A-A	*432*	*432AL, 432BR*	
67-10-00-027	DET	Do a detailed inspection of the collective boosted rod assembly.	505-A-67-11-17-00A-281A-A	432	432AL, 432BR	

POST OFFICE BOX 482 • FORT WORTH, TEXAS 76101

1200 flight hours/2 years inspection - Function, data for plans and description

NOTE

Complete the inspection each 1200 hours of operation time or 2 years, whichever occurs first.

NOTE

Refer to 505-A-06-30-00-00A-030A-A for the identification and complete description of the zones.

Refer to 505-A-06-40-00-00A-030A-A for the identification and complete description of the access panels.

Table 1. 1200 flight hours/2 years inspection

Task No.	Task type	Task description	Reference (DMC)	Zone	Access	Initials
25-21-00-001	DET	Do a detailed inspection of the three VIP passenger seats, if installed.	505-A-25-20-02-00A-281A-A	140	140AL, 210AL, 220AR	
25-21-00-002	DET	Do a detailed inspection of the restraint assembly of the three VIP passenger seats, if installed.	505-A-25-20-02-01A-281A-A	140	140AL, 210AL, 220AR	
25-21-00-003	DET	Do a detailed inspection of the attenuation system of the three VIP passenger seats, if installed.	505-A-25-20-02-03A-281A-A	140	140AL, 210AL, 220AR	
25-22-00-001	DET	Do a detailed inspection of the three utility passenger seats.	505-A-25-20-01-00A-281A-A	140	140AL, 210AL, 220AR	
25-22-00-002	DET	Do a detailed inspection of the restraint assembly of the three utility passenger seats.	505-A-25-20-01-01A-281A-A	140	140AL, 210AL, 220AR	
25-22-00-003	DET	Do a detailed inspection of the attenuation system of the three utility passenger seats.	505-A-25-20-01-03A-281A-A	140	140AL, 210AL, 220AR	

POST OFFICE BOX 482 • FORT WORTH, TEXAS 76101

Intentionally blank page

POST OFFICE BOX 482 • FORT WORTH, TEXAS 76101

2250 flight hours/6 years inspection - Function, data for plans and description

NOTE

Complete the inspection each 2250 hours of operation time or 6 years, whichever occurs first.

NOTE

Refer to 505-A-06-30-00-00A-030A-A for the identification and complete description of the zones.

Refer to 505-A-06-40-00-00A-030A-A for the identification and complete description of the access panels.

Table 1. 2250 flight hours/6 years inspection

Task No.	Task type	Task description	Reference (DMC)	Zone	Access	Initials
63-20-00-003	DET	Do a detailed inspection of the internal areas of the transmission assembly.	505-A-63-21-02-00A-281A-A. *D E L E T E D* *D E L E T E D*	433	432AL, 432BR, 433AL, 433BR	

POST OFFICE BOX 482 • FORT WORTH, TEXAS 76101

Intentionally blank page

POST OFFICE BOX 482 • FORT WORTH, TEXAS 76101

3000 flight hours/3 years inspection - Function, data for plans and description

NOTE

Complete the inspection each 3000 hours of operation time or 3 years, whichever occurs first.

NOTE

Refer to 505-A-06-30-00-00A-030A-A for the identification and complete description of the zones.

Table 1. ***3000 flight hours/3 years inspection***

Task No.	*Task type*	*Task description*	*Reference (DMC)*	*Zone*	*Access*	*Ini-tials*
25-70-00-002	*DET*	*Do a detailed inspection of the cargo hook and the dead link, if installed.*	505-A-25-71-01-00A-281A-A.	*153, 154, 171*	*N/A*	

POST OFFICE BOX 482 • FORT WORTH, TEXAS 76101

Intentionally blank page

POST OFFICE BOX 482 • FORT WORTH, TEXAS 76101

3000 flight hours/6 years inspection - Function, data for plans and description

NOTE

Complete the inspection each 3000 hours of operation time or 6 years, whichever occurs first.

NOTE

Refer to 505-A-06-30-00-00A-030A-A for the identification and complete description of the zones.

Table 1. 3000 flight hours/6 years inspection

Task No.	Task type	Task description	Reference (DMC)	Zone	Access	Initials
65-20-00-004	DET	Do a detailed inspection of the external and internal areas of the tail rotor gearbox.	505-A-65-20-01-00A-281D-A. *D E L E T E D* *D E L E T E D*	450	N/A	

POST OFFICE BOX 482 • FORT WORTH, TEXAS 76101

Intentionally blank page

POST OFFICE BOX 482 • FORT WORTH, TEXAS 76101

5000 flight hours/5 years inspection - Function, data for plans and description

NOTE

Complete the inspection each 5000 hours of operation time or 5 years, whichever occurs first.

NOTE

Refer to 505-A-06-30-00-00A-030A-A for the identification and complete description of the zones.

Table 1. ***5000 flight hours/5 years inspection***

Task No.	*Task type*	*Task description*	*Reference (DMC)*	*Zone*	*Access*	*Initials*
25-70-00-001	*RST*	*Do the restoration (overhaul) of the cargo hook.*	505-A-25-71-01-01A-520A-A. *Send the cargo hook for restoration (overhaul) to an approved repair facility.* 505-A-25-71-01-01A-720A-A.	*450*	*N/A*	

POST OFFICE BOX 482 • FORT WORTH, TEXAS 76101

Intentionally blank page

POST OFFICE BOX 482 • FORT WORTH, TEXAS 76101

25 flight hours inspection - Function, data for plans and description

Table 1. 25 flight hours inspection

Task No.	Task type	Task description	Reference (DMC)	Zone	Access	Ini-tials
72-00-00-003	FNC	Do an engine power check.	*BHT-505-FM*	N/A	N/A	

POST OFFICE BOX 482 • FORT WORTH, TEXAS 76101

Intentionally blank page

POST OFFICE BOX 482 • FORT WORTH, TEXAS 76101

50 flight hours inspection - Function, data for plans and description

NOTE

Refer to 505-A-06-30-00-00A-030A-A for the identification and complete description of the zones.

Refer to 505-A-06-40-00-00A-030A-A for the identification and complete description of the access panels.

Table 1. 50 flight hours inspection

Task No.	Task type	Task description	Reference (DMC)	Zone	Access	Ini-tials
62-20-00-010	LUB	Lubricate the main rotor grips.	505-A-12-20-01-00A-242A-A	420	N/A	
62-20-00-011	LUB	Lubricate the trunnion bearings.	505-A-12-20-02-00A-242A-A	420	N/A	
62-20-00-012	LUB	Lubricate the bearing of the pillow block assemblies.	505-A-12-20-03-00A-242A-A	420	N/A	
62-30-00-011	*LUB*	*Lubricate the swashplate and support assembly (duplex bearing).*	505-A-12-20-04-00A-242A-A	*432AR, 432AL*	*N/A*	

POST OFFICE BOX 482 • FORT WORTH, TEXAS 76101

Intentionally blank page

POST OFFICE BOX 482 • FORT WORTH, TEXAS 76101

100 flight hours inspection - Function, data for plans and description

NOTE

Refer to 505-A-06-30-00-00A-030A-A for the identification and complete description of the zones.

Table 1. 100 flight hours inspection

Task No.	Task type	Task description	Reference (DMC)	Zone	Access	Initials
62-20-00-002	FNC	Do a torque check of the pillow block assemblies attaching hardware.	505-A-62-20-01-00A-281B-A	420	N/A	
Deleted						
Deleted						
64-30-00-003	LUB	Lubricate the tail rotor pitch change mechanism.	505-A-12-20-05-00A-242A-A	460	N/A	
67-10-00-033	*DET*	*Do a detailed inspection of the bellcrank assembly spherical bearings.*	505-A-67-11-15-00A-281B-A, 505-A-67-12-16-00A-281B-A, 505-A-67-12-17-00A-281B-A	*432*	*432AL, 432AR*	

POST OFFICE BOX 482 • FORT WORTH, TEXAS 76101

Intentionally blank page

POST OFFICE BOX 482 • FORT WORTH, TEXAS 76101

150 flight hours inspection - Function, data for plans and description

NOTE

Refer to 505-A-06-30-00-00A-030A-A for the identification and complete description of the zones.

Refer to 505-A-06-40-00-00A-030A-A for the identification and complete description of the access panels.

Table 1. 150 flight hours inspection

Task No.	Task type	Task description	Reference (DMC)	Zone	Access	Initials
29-10-00-004	*DET*	Do a detailed inspection of the pump driveshaft assembly.	505-A-29-10-03-02A-281A-A	433	433AL, 433BR	

POST OFFICE BOX 482 • FORT WORTH, TEXAS 76101

Intentionally blank page

POST OFFICE BOX 482 • FORT WORTH, TEXAS 76101

200 flight hours inspection - Function, data for plans and description

NOTE

Refer to 505-A-06-30-00-00A-030A-A for the identification and complete description of the zones.

Refer to 505-A-06-40-00-00A-030A-A for the identification and complete description of the access panels.

Table 1. 200 flight hours inspection

Task No.	Task type	Task description	Reference (DMC)	Zone	Access	Initials
25-11-00-002	LUB	Lubricate the crew seat positioning mechanism.	505-A-12-20-11-00A-241A-A	210, 220	210AL, 220AR	
25-11-00-003	DET	Do a detailed inspection of the locking pins.	505-A-25-10-02-06A-281A-A	210, 220	210AL, 220AR	
25-11-00-004	GVI	Do a general visual inspection of the seat tracks.	505-A-25-10-03-00A-281A-A	210, 220	210AL, 220AR	
73-10-00-001	OPC	**NOTE** If the FOPS TST INPROG CAS message is not shown during the Flame Out Protection System (FOPS) test and if the FOPS TST OK message or the FOPS TST FAIL message are not shown at the end of the test, refer to the 505-A-46-40-00-00A-320A-A. Do the FOPS test.	BHT-505-FM	N/A	N/A	
73-10-00-003	RST	Do the restoration of the preference injector.	*PRE TF 91. Refer to the manufacturer's manual for the applicability.*	440	N/A	

POST OFFICE BOX 482 • FORT WORTH, TEXAS 76101

Intentionally blank page

POST OFFICE BOX 482 • FORT WORTH, TEXAS 76101

300 flight hours inspection - Function, data for plans and description

NOTE

Refer to 505-A-06-30-00-00A-030A-A for the identification and complete description of the zones.

Refer to 505-A-06-40-00-00A-030A-A for the identification and complete description of the access panels.

Table 1. 300 flight hours inspection

Task No.	Task type	Task description	Reference (DMC)	Zone	Access	Initials
18-10-00-001	DET	Do a detailed inspection of the tail damper assembly.	505-A-18-60-20-00A-281A-A	310	N/A	
29-10-00-001	DIS	*Discard and replace the HRFM hydraulic filter element.*	505-A-29-10-01-01A-921A-A	432	432AL	
29-10-00-002	GVI	Do a general visual inspection of the hydraulic pressure tube.	505-A-29-10-04-00A-281A-A	432, 433	432AL, 433AL	
29-10-00-003	GVI	Do a general visual inspection of the hydraulic suction tube.	505-A-29-10-05-00A-281A-A	432, 433	432BR, 433BR	
29-10-00-007	RST	*Restore the hydraulic pressure filter element by cleaning.*	505-A-29-10-09-01A-281A-A	432, 433	432AL, 433AL	
Deleted						
52-10-00-001	DET	Do a detailed inspection of the left crew door.	505-A-52-10-01-00A-281A-A	210	210AL	
52-10-00-002	DET	Do a detailed inspection of the right crew door.	505-A-52-10-02-00A-281A-A	220	220AR	
52-10-00-003	DET	Do a detailed inspection of the clamshell door.	505-A-52-10-03-00A-281A-A	140	140AL	
62-30-00-001	DET	Do a detailed inspection of the pivot sleeve assembly.	505-A-62-30-01-13A-281A-A	432	432AL, 432BR	
62-30-00-003	DET	Do a detailed inspection of the support assembly.	505-A-62-30-01-17A-281A-A	432	432AL, 432BR	
62-30-00-005	DET	Do a detailed inspection of the collective lever assembly.	505-A-62-30-01-01A-281A-A	432	432AL, 432BR	
62-30-00-007	DET	Do a detailed inspection of the idler assembly.	505-A-62-30-01-04A-281A-A	432	432AL, 432BR	
62-30-00-009	DET	Do a detailed inspection of the inner ring assembly.	505-A-62-30-01-16A-281A-A	432	432AL, 432BR	
62-30-00-010	FNC	Do an inspection and a functional check of the drive lever assembly, idler link assembly, and collar set swashplate drive assembly.	505-A-62-30-03-00A-281A-A, 505-A-62-30-04-00A-281A-A, 505-A-62-30-05-00A-281A-A	432	432AL, 432BR	
62-30-00-012	DET	Do a detailed inspection of the duplex bearing of the swashplate and support assembly.	505-A-62-30-01-11A-281A-A	432	432AL, 432BR	
62-30-00-013	FNC	Do a functional check (tilt friction check) of the swashplate and support assembly.	505-A-62-30-01-00A-360A-A	432, 433	432AL, 432BR, 433AL, 433BR	
62-30-00-014	DET	Do a detailed inspection of the slide bearing assemblies.	505-A-62-30-01-12A-281A-A	432	432AL, 432BR	
62-30-00-016	DET	Do a detailed inspection of the outer ring assembly.	505-A-62-30-01-10A-281A-A	432	432AL, 432BR	
62-30-00-017	DET	Do a detailed inspection of the pitch link assemblies.	505-A-62-30-02-00A-281A-A	432	432AL, 432BR	

POST OFFICE BOX 482 • FORT WORTH, TEXAS 76101

Table 1. 300 flight hours inspection (continued)

Task No.	Task type	Task description	Reference (DMC)	Zone	Access	Initials
62-30-00-026	FNC	Do a functional check of the swashplate and support assembly (outer ring assembly).	505-A-62-30-01-10A-340A-A	432	432AL, 432BR	
63-31-00-003	FNC	Do a functional check (pressure check) of the nitrogen in the Liquid Inertia Vibration Eliminator (LIVE) mount units.	505-A-12-10-08-00A-362A-A	432	432AL, 433BR	
63-40-00-001	OPC	Do an operational check of the transmission and freewheel chip detectors.	505-A-63-41-00-00A-340A-A, 505-A-63-42-00-00A-340A-A	432, 433, 441	432AL, 433BR, 441AT	
63-50-00-001	SVC	Do a fluid level check of the rotor brake system and service if necessary, if installed.	505-A-12-10-06-00A-369A-A 505-A-12-10-06-00A-218A-A	192	192AR	
64-10-00-001	FNC	Do a functional check (dynamic balance) of the tail rotor.	505-A-18-62-00-00A-271A-A	460, 470	N/A	
64-30-00-001	GVI	Do a general visual inspection of the crosshead, pitch link assemblies, pitch change mechanism, and tail rotor control tube.	505-A-64-30-01-00A-281A-A, 505-A-64-30-02-00A-281A-A, 505-A-67-20-24-00A-281A-A, 505-A-67-20-25-00A-281A-A	460, 470	N/A	
65-10-00-001	GVI	Do a general visual inspection of the forward driveshaft.	505-A-65-10-01-00A-281B-A	443	443AT	
65-10-00-003	GVI	Do a general visual inspection of the fan shaft assembly.	505-A-65-10-02-00A-281C-A	443, 444	443AT, 444AT	
65-10-00-004	GVI	Do a general visual inspection of the aft driveshaft.	505-A-65-10-03-00A-281B-A	444, 450	444AT, 450AT	
65-10-00-006	GVI	Do a general visual inspection of the driveshaft segments.	505-A-65-10-04-00A-281B-A, 505-A-65-10-05-00A-281B-A, 505-A-65-10-06-00A-281B-A, 505-A-65-10-07-00A-281B-A, 505-A-65-10-08-00A-281B-A	450	450AT, 450BT, 450CT	
65-10-00-008	GVI	Do a general visual inspection of the forward adapter.	505-A-65-10-02-00A-281D-A	443, 444	443AT, 444AT	
65-10-00-010	GVI	Do a general visual inspection of the aft adapters.	505-A-65-10-02-00A-281D-A, 505-A-65-20-01-00A-281B-A	443, 444, 450	443AT, 444AT, 450CT	
65-10-00-011	FNC	Do a functional check (torque check) of the attaching hardware of the disc packs of the forward driveshaft.	505-A-65-10-00-00A-281A-A	443	443AT	
65-10-00-012	DET	Do a detailed inspection of the disc packs of the forward driveshaft.	505-A-65-10-09-00A-281B-A	443	443AT	
65-10-00-013	FNC	Do a functional check (torque check) of the attaching hardware of the disc packs of the aft driveshaft and the driveshaft segments.	505-A-65-10-00-00A-281A-A	450	450AT, 450BT, 450CT	
65-10-00-014	DET	Do a detailed inspection of the disc packs of the aft driveshaft and the driveshaft segments.	505-A-65-10-09-00A-281B-A	450	450AT, 450BT, 450CT	
65-20-00-003	FNC	Do a functional check (torque check) of the attaching hardware of the tail rotor gearbox.	505-A-65-20-00-00A-281A-A	310	310CB	
65-40-00-001	OPC	Do an operational check of the tail rotor gearbox indicating system.	505-A-65-40-00-00A-340A-A	192	192BR	

POST OFFICE BOX 482 • FORT WORTH, TEXAS 76101

Table 1. 300 flight hours inspection (continued)

Task No.	Task type	Task description	Reference (DMC)	Zone	Access	Initials
67-20-00-006	GVI	Do a general visual inspection of the forward cable assemblies.	505-A-67-20-10-00A-281A-A, 505-A-67-20-11-00A-281A-A	127, 128, 129, 135, 136, 160, 193, 433	120AB, 129AZ, 130AZ, 160AB, 192AR, 433BR	
67-20-00-007	GVI	Do a general visual inspection of the aft cable assemblies.	505-A-67-20-16-00A-281A-A, 505-A-67-20-17-00A-281A-A	193, 310	192AR, 310AB, 310BB, 310CB	
67-20-00-016	FNC	Do a functional check (tension check) of the cables assemblies.	505-A-67-20-00-00A-360B-A	127, 160, 193	120AB, 160AB, 192AR	
71-20-00-001	DET	Do a detailed inspection of the forward left and right mounts and the aft mount of the engine.	505-A-71-20-01-00A-281B-A 505-A-71-20-02-00A-281B-A 505-A-71-20-03-00A-281B-A	441, 443, 444	441AT, 443AT, 444AT	
79-21-00-001	GVI	Do a general visual inspection of the oil cooler assembly.	505-A-79-20-01-00A-281A-A	193	191AL, 192AR	

POST OFFICE BOX 482 • FORT WORTH, TEXAS 76101

Intentionally blank page

POST OFFICE BOX 482 • FORT WORTH, TEXAS 76101

400 flight hours inspection - Function, data for plans and description

NOTE

Refer to 505-A-06-30-00-00A-030A-A for the identification and complete description of the zones.

Table 1. 400 flight hours inspection

Task No.	Task type	Task description	Reference (DMC)	Zone	Access	Initials
Deleted						
73-10-00-002	FNC	Do a fuel flow check of the left and right injector half-manifolds.	Refer to the manufacturer's maintenance manual for the remove and install procedures of the injector half-manifolds. Send the left and right injector half-manifolds for a fuel flow check. www.turbomeca-support.com/	440	N/A	

POST OFFICE BOX 482 • FORT WORTH, TEXAS 76101

Intentionally blank page

POST OFFICE BOX 482 • FORT WORTH, TEXAS 76101

500 flight hours inspection - Function, data for plans and description

NOTE

Refer to 505-A-06-30-00-00A-030A-A for the identification and complete description of the zones.

Refer to 505-A-06-40-00-00A-030A-A for the identification and complete description of the access panels.

Table 1. 500 flight hours inspection

Task No.	Task type	Task description	Reference (DMC)	Zone	Access	Initials
24-30-00-001	RST	*Restore the starter generator by replacing the brushes.*	505-A-24-30-01-00A-520A-A Send the starter generator for brushes replacement. 505-A-24-30-01-00A-720A-A	441	441AT	
25-11-00-005	DET	Do a detailed inspection of the restraint assembly of the crew seats.	505-A-25-10-02-01A-281A-A	210, 220	210AL, 220AR	
25-11-00-007	GVI	*Do a general visual inspection of the crew seat cushions.*	505-A-25-10-02-07A-281A-A	210, 220	210AL, 220AR	

POST OFFICE BOX 482 • FORT WORTH, TEXAS 76101

Intentionally blank page

POST OFFICE BOX 482 • FORT WORTH, TEXAS 76101

600 flight hours inspection - Function, data for plans and description

NOTE

Refer to 505-A-06-30-00-00A-030A-A for the identification and complete description of the zones.

Refer to 505-A-06-40-00-00A-030A-A for the identification and complete description of the access panels.

Table 1. 600 flight hours inspection

Task No.	Task type	Task description	Reference (DMC)	Zone	Access	Initials
26-10-00-001	FNC	Do a functional check of the fire detection system.	505-A-26-10-00-00A-340A-A	441, 443	441AT, 443AT	
52-10-00-004	GVI	Do a general visual inspection of the left crew door window.	505-A-56-30-01-00A-281A-A	210	210AL	
52-10-00-005	GVI	Do a general visual inspection of the right crew door window.	505-A-56-30-02-00A-281A-A	220	220AR	
52-10-00-006	GVI	Do a general visual inspection of the clamshell door window.	505-A-56-30-03-00A-281A-A	140	140AL	
52-10-00-007	GVI	Do a general visual inspection of the left crew door seal.	505-A-52-10-01-03A-281A-A	210	210AL	
52-10-00-008	GVI	Do a general visual inspection of the right crew door seal.	505-A-52-10-02-03A-281A-A	220	220AR	
52-10-00-009	GVI	Do a general visual inspection of the clamshell door seal.	505-A-52-10-03-01A-281A-A	140	140AL	
62-20-00-009	OPC	Do an operational check of the flap restraint assembly.	505-A-62-20-02-00A-281A-A	420	N/A	
62-20-00-016	DET	Do a detailed inspection of the main rotor hub assembly.	505-A-62-20-01-00A-281A-A	420	N/A	
62-20-00-025	DET	Do a detailed inspection of the static stops.	505-A-62-20-01-17A-281A-A	420	N/A	
62-20-00-026	GVI	Do a general visual inspection of the weight retainers.	505-A-62-20-00-04A-281A-A	420	N/A	
63-32-00-002	GVI	Do a general visual inspection of left and right stop mount assemblies.	505-A-63-30-02-00A-281A-A, 505-A-63-30-03-00A-281A-A	433	433AL, 433BR	
63-50-00-002	FNC	*Do a functional check (measure the thickness of the friction pads) on the calipers, if installed.*	505-A-63-23-05-01A-281A-A	441	441AT	
67-10-00-017	DET	Do a detailed inspection of the copilot cyclic stick and grip assembly, if installed.	505-A-67-12-22-00A-281A-A	210	210AL	
67-10-00-028	DET	Do a detailed inspection of the copilot collective stick and grip assembly, if installed.	505-A-67-11-18-00A-281A-A	*125, 210*	210AL	
67-10-00-029	DET	Do a detailed inspection of the copilot collective jackshaft assembly, if installed.	505-A-67-11-03-00A-281A-A	125	125AZ	
67-10-00-031	FNC	*Do a functional check (friction check) of the collective control system.*	505-A-67-11-00-00A-360B-A	*129, 220*	220AR	
67-10-00-034	DET	Do a detailed inspection of the left, collective, and right servo-actuators.	505-A-67-30-01-00A-281B-A, 505-A-67-30-03-00A-281B-A, 505-A-67-30-05-00A-281B-A	*431, 432*	432AL, 432BR	
67-20-00-001	DET	Do a detailed inspection of the left and right pedals.	505-A-67-20-01-01A-281A-A, 505-A-67-20-02-01A-281A-A	122	120AB	
67-20-00-002	DET	Do a detailed inspection of the left and right upright tubes.	505-A-67-20-01-02A-281A-A, 505-A-67-20-02-02A-281A-A	122	120AB	

POST OFFICE BOX 482 • FORT WORTH, TEXAS 76101

Table 1. 600 flight hours inspection (continued)

Task No.	Task type	Task description	Reference (DMC)	Zone	Access	Initials
67-20-00-003	DET	Do a detailed inspection of the forward and aft pedal jackshaft assemblies.	505-A-67-20-03-01A-281A-A, 505-A-67-20-03-02A-281A-A	121, 122, 127	120AB	
67-20-00-004	DET	Do a detailed inspection of the left and right pedal links.	505-A-67-20-06-00A-281A-A, 505-A-67-20-07-00A-281A-A	127	120AB	
67-20-00-005	DET	Do a detailed inspection of the directional quadrant assembly.	505-A-67-20-08-00A-281A-A	127	120AB	
67-20-00-008	DET	Do a detailed inspection of the directional bellcranks.	505-A-67-20-18-00A-281A-A, 505-A-67-20-19-00A-281A-A	310	310CB	
67-20-00-009	DET	Do a detailed inspection of the left and right control supports.	505-A-67-20-20-00A-281A-A, 505-A-67-20-21-00A-281A-A	310	310CB	
67-20-00-010	DET	Do a detailed inspection of the short and long rod assemblies.	505-A-67-20-22-00A-281A-A, 505-A-67-20-23-00A-281A-A	310	310CB	
67-20-00-011	DET	Do a detailed inspection of the forward pulley assembly.	505-A-67-20-12-00A-281A-A	129	120AB	
67-20-00-012	DET	Do a detailed inspection of the mid lower pulley assembly.	505-A-67-20-13-00A-281A-A	160	160AB	
67-20-00-013	DET	Do a detailed inspection of the mid upper pulley assembly.	505-A-67-20-14-00A-281A-A	433	433BR	
67-20-00-014	DET	Do a detailed inspection of the aft pulley assembly.	505-A-67-20-15-00A-281A-A	192	192AR	
67-20-00-015	GVI	Do a general visual inspection of the directional quadrant assembly stop.	505-A-67-20-09-00A-281A-A	127	120AB	
67-20-00-017	GVI	Do a general visual inspection of the jackshaft support assemblies.	505-A-67-20-03-03A-281A-A	121, 122, 127	120AB	
71-30-00-001	GVI	Do a general visual inspection of the parts that follow: - Forward vertical firewall - Main driveshaft access panel - Left firewall - Right firewall - Aft vertical firewall - Horizontal firewall - Aft horizontal firewall	505-A-71-30-01-00A-281A-A, 505-A-71-30-02-00A-281A-A, 505-A-71-30-05-00A-281A-A, 505-A-71-30-06-00A-281A-A, 505-A-71-30-07-00A-281A-A, 505-A-71-30-08-00A-281A-A, 505-A-71-30-09-00A-281A-A	191, 192, 432, 441, 442, 443, 444	191AL, 192AR, 432AL, 432BR, 441AT, 443AT, 444AT, Inlet Barrier Filter (IBF)	
71-30-00-002	GVI	Do a general visual inspection of the left and right intake assembly halves.	505-A-71-60-01-00A-281A-A, 505-A-71-60-02-00A-281A-A	*441, 442, 443*	441AT, 443AT	
71-30-00-003	DET	Do a detailed inspection of the grommets below the horizontal firewall.	505-A-71-30-08-00A-281B-A	191, 192	*191AL, 192AR*	
73-20-00-002	FNC	*Do a functional check (Auxiliary Control Unit (ACU) test) of the engine back up control.*	BHT-505-FM	N/A	N/A	
78-10-00-001	GVI	Do a general visual inspection of the exhaust pipe.	505-A-78-10-01-00A-281A-A	444	444AT	
78-10-00-002	GVI	Do a general visual inspection of the exhaust tip.	505-A-78-10-01-00A-281B-A	444	444AT	
79-30-00-001	FNC	*Do a functional check (magnetism test) of the electrical magnetic plugs.*	Refer to the manufacturer's maintenance manual for the magnetism test procedure. www.turbomeca-support.com/	441, 443	441AT, 443AT	

POST OFFICE BOX 482 • FORT WORTH, TEXAS 76101

1000 flight hours inspection - Function, data for plans and description

NOTE

Refer to 505-A-06-30-00-00A-030A-A for the identification and complete description of the zones.

Refer to 505-A-06-40-00-00A-030A-A for the identification and complete description of the access panels.

Table 1. ***1000 flight hours inspection***

Task No.	*Task type*	*Task description*	*Reference (DMC)*	*Zone*	*Access*	*Initials*
24-30-00-002	*RST*	*Do a restoration (overhaul) of the starter generator.*	505-A-24-30-01-00A-520A-A. *Send the starter generator for restoration (overhaul).* 505-A-24-30-01-00A-720A-A.	*441*	*441AT*	

POST OFFICE BOX 482 • FORT WORTH, TEXAS 76101

Intentionally blank page

POST OFFICE BOX 482 • FORT WORTH, TEXAS 76101

1200 flight hours inspection - Function, data for plans and description

NOTE

Refer to 505-A-06-30-00-00A-030A-A for the identification and complete description of the zones.

Refer to 505-A-06-40-00-00A-030A-A for the identification and complete description of the access panels.

Table 1. 1200 flight hours inspection

Task No.	Task type	Task description	Reference (DMC)	Zone	Access	Initials
29-10-00-006	DIS	Discard and replace the pressure filter element.	505-A-29-10-09-01A-921A-A	433	433AL	
Delete						
63-20-00-009	DET	Do a detailed inspection of the union filter (P/N 50-075-1).	505-A-63-22-08-00A-281A-A	191, 433, 441	191AL, 433AL, 441AT	
63-20-00-010	DET	Do a detailed inspection of the union fitting.	505-A-63-22-08-00A-281A-A	191, 433, 441	191AL, 433AL, 441AT	
63-20-00-011	DET	Do a detailed inspection of the restrictor fittings.	505-A-63-22-08-00A-281A-A	191, 433, 441	191AL, 433AL, 441AT	
72-00-00-006	SDI	**NOTE** Only applicable to Electronic Engine Control Unit (EECU) software version TF-87. Do a special detailed inspection of the combustion chamber with a borescope, for damage or cracks.	Refer to the manufacturer's maintenance manual for the procedure and for more information. www.turbomeca-support.com/	440, 441, 442, 443	441AT, 443AT	

POST OFFICE BOX 482 • FORT WORTH, TEXAS 76101

Intentionally blank page

POST OFFICE BOX 482 • FORT WORTH, TEXAS 76101

1500 flight hours inspection - Function, data for plans and description

NOTE

Refer to 505-A-06-30-00-00A-030A-A for the identification and complete description of the zones.

Refer to 505-A-06-40-00-00A-030A-A for the identification and complete description of the access panels.

Table 1. 1500 flight hours inspection

Task No.	Task type	Task description	Reference (DMC)	Zone	Access	Initials
63-20-00-008	DET	Do a detailed inspection of the mast assembly.	505-A-63-21-01-00A-281C-A. *D E L E T E D* *D E L E T E D*	420, 432, 433	432AL, 432BR	

POST OFFICE BOX 482 • FORT WORTH, TEXAS 76101

Intentionally blank page

POST OFFICE BOX 482 • FORT WORTH, TEXAS 76101

1800 flight hours inspection - Function, data for plans and description

NOTE

Refer to 505-A-06-30-00-00A-030A-A for the identification and complete description of the zones.

Refer to 505-A-06-40-00-00A-030A-A for the identification and complete description of the access panels.

Table 1. 1800 flight hours inspection

Task No.	Task type	Task description	Reference (DMC)	Zone	Access	Initials
63-50-00-003	RST	Do a restoration (overhaul) of the calipers of the rotor brake kit, if installed.	505-A-63-23-05-00A-520A-A. Send the calipers for restoration (overhaul). 505-A-63-23-05-00A-720A-A.	441	441AT	

POST OFFICE BOX 482 • FORT WORTH, TEXAS 76101

Intentionally blank page

POST OFFICE BOX 482 • FORT WORTH, TEXAS 76101

2000 flight hours inspection - Function, data for plans and description

NOTE

Refer to 505-A-06-30-00-00A-030A-A for the identification and complete description of the zones.

Refer to 505-A-06-40-00-00A-030A-A for the identification and complete description of the access panels.

Table 1. 2000 flight hours inspection

Task No.	Task type	Task description	Reference (DMC)	Zone	Access	Initials
25-11-00-001	DET	Do a detailed inspection of the seat structure of the two crew seats.	505-A-25-10-02-04A-281A-A	210, 220	*210AL, 220AR*	
25-11-00-006	DET	Do a detailed inspection of the bucket assembly of the two crew seats.	505-A-25-10-02-03A-281A-A	210, 220	*210AL, 220AR*	
63-11-00-002	RST	Do a restoration (overhaul) of the main driveshaft.	505-A-63-10-01-00A-520A-A. Send the main driveshaft for restoration (overhaul). 505-A-63-10-01-00A-720A-A.	*432, 441*	432AL, 432BR, 432CZ, 441AT	

POST OFFICE BOX 482 • FORT WORTH, TEXAS 76101

Intentionally blank page

POST OFFICE BOX 482 • FORT WORTH, TEXAS 76101

2400 flight hours inspection - Function, data for plans and description

NOTE

Refer to 505-A-06-30-00-00A-030A-A for the identification and complete description of the zones.

Table 1. 2400 flight hours inspection

Task No.	Task type	Task description	Reference (DMC)	Zone	Access	Initials
62-20-00-003	RST	Do a restoration (overhaul) of the main rotor hub assembly.	505-A-62-20-01-00A-520A-A. Send the main rotor hub assembly for restoration (overhaul). 505-A-62-20-01-00A-720A-A.	420	N/A	

POST OFFICE BOX 482 • FORT WORTH, TEXAS 76101

Intentionally blank page

POST OFFICE BOX 482 • FORT WORTH, TEXAS 76101

2500 flight hours inspection - Function, data for plans and description

NOTE

Refer to 505-A-06-30-00-00A-030A-A for the identification and complete description of the zones.

Table 1. 2500 flight hours inspection

Task No.	Task type	Task description	Reference (DMC)	Zone	Access	Initials
64-10-00-004	RST	Do a restoration (overhaul) of the tail rotor hub assembly.	505-A-64-20-01-00A-520A-A. Send the tail rotor hub assembly for restoration (overhaul). 505-A-64-20-01-00A-720A-A.	460	N/A	

POST OFFICE BOX 482 • FORT WORTH, TEXAS 76101

Intentionally blank page

POST OFFICE BOX 482 • FORT WORTH, TEXAS 76101

3000 flight hours inspection - Function, data for plans and description

NOTE

Refer to 505-A-06-30-00-00A-030A-A for the identification and complete description of the zones.

Refer to 505-A-06-40-00-00A-030A-A for the identification and complete description of the access panels.

Table 1. 3000 flight hours inspection

Task No.	Task type	Task description	Reference (DMC)	Zone	Access	Initials
25-70-00-002	*DET*	*Do a detailed inspection of the cargo hook dead link for axial play.*	505-A-25-71-01-00A-281A-A.	*171*		
63-12-00-001	RST	Do a restoration (overhaul) of the freewheel assembly.	505-A-63-10-02-00A-520A-A. Send the freewheel assembly to an approved service facility for restoration (overhaul). 505-A-63-10-02-00A-720A-A.	441, 443	441AT, 443AT	
63-20-00-006	RST	Do a restoration (overhaul) of the mast assembly.	505-A-63-21-01-00A-520A-A. Send the mast assembly to an approved service facility for restoration (overhaul). 505-A-63-21-01-00A-720A-A.	420, 432, 433	432AL, 432BR	
64-30-00-002	GVI	Do a general visual inspection of the tail rotor control tube.	505-A-67-20-25-00A-281B-A	450	N/A	
72-00-00-001	RST	Do a restoration (overhaul) of the gas generator module of the engine.	505-A-71-00-01-00A-520A-A. Send the engine to an approved service facility for restoration (overhaul). 505-A-71-00-01-00A-720A-A.	441, 442, 443	441AT, 443AT	
72-00-00-002	RST	Do a restoration (overhaul) of the reduction gear module of the engine.	505-A-71-00-01-00A-520A-A. Send the engine to an approved service facility for restoration (overhaul). 505-A-71-00-01-00A-720A-A.	441, 442, 443	441AT, 443AT	
73-20-00-001	RST	Do a restoration (overhaul) of the pump and metering unit assembly of the engine.	505-A-71-00-01-00A-520A-A. Send the engine to an approved service facility for restoration (overhaul). 505-A-71-00-01-00A-720A-A.	441, 442, 443	441AT, 443AT	

POST OFFICE BOX 482 • FORT WORTH, TEXAS 76101

Intentionally blank page

POST OFFICE BOX 482 • FORT WORTH, TEXAS 76101

4500 flight hours inspection - Function, data for plans and description

NOTE

Refer to 505-A-06-30-00-00A-030A-A for the identification and complete description of the zones.

Refer to 505-A-06-40-00-00A-030A-A for the identification and complete description of the access panels.

Table 1. 4500 flight hours inspection

Task No.	Task type	Task description	Reference (DMC)	Zone	Access	Initials
63-20-00-004	RST	Do a restoration (overhaul) of the transmission assembly.	505-A-63-21-02-00A-520A-A. Send the transmission assembly for restoration (overhaul). 505-A-63-21-02-00A-720A-A.	433	432AL, 432BR, 433AL, 433BR	

POST OFFICE BOX 482 • FORT WORTH, TEXAS 76101

Intentionally blank page

POST OFFICE BOX 482 • FORT WORTH, TEXAS 76101

4800 flight hours inspection - Function, data for plans and description

NOTE

Refer to 505-A-06-30-00-00A-030A-A for the identification and complete description of the zones.

Refer to 505-A-06-40-00-00A-030A-A for the identification and complete description of the access panels.

Table 1. 4800 flight hours inspection

Task No.	Task type	Task description	Reference (DMC)	Zone	Access	Initials
62-30-00-015	RST	Do a restoration (overhaul) of the swashplate and support assembly.	505-A-62-30-01-00A-520A-A. Send the swashplate and support assembly for restoration (overhaul). 505-A-62-30-01-00A-720A-A.	432	432AL, 432BR	

POST OFFICE BOX 482 • FORT WORTH, TEXAS 76101

Intentionally blank page

POST OFFICE BOX 482 • FORT WORTH, TEXAS 76101

6000 flight hours inspection - Function, data for plans and description

NOTE

Refer to 505-A-06-30-00-00A-030A-A for the identification and complete description of the zones.

Table 1. 6000 flight hours inspection

Task No.	Task type	Task description	Reference (DMC)	Zone	Access	Initials
65-20-00-006	RST	Do a restoration (overhaul) of the tail rotor gearbox.	505-A-65-20-01-00A-520A-A. Send the tail rotor gearbox for restoration (overhaul). 505-A-65-20-01-00A-720A-A.	450	N/A	

POST OFFICE BOX 482 • FORT WORTH, TEXAS 76101

Intentionally blank page

POST OFFICE BOX 482 • FORT WORTH, TEXAS 76101

30 days inspection - Function, data for plans and description

NOTE

Refer to 505-A-06-30-00-00A-030A-A for the identification and complete description of the zones.

Refer to 505-A-06-40-00-00A-030A-A for the identification and complete description of the access panels.

Table 1. 30 days inspection

Task No.	Task type	Task description	Reference (DMC)	Zone	Access	Initials
DELETED						

POST OFFICE BOX 482 • FORT WORTH, TEXAS 76101

Intentionally blank page

POST OFFICE BOX 482 • FORT WORTH, TEXAS 76101

1 year inspection - Function, data for plans and description

NOTE

Refer to 505-A-06-30-00-00A-030A-A for the identification and complete description of the zones.

Refer to 505-A-06-40-00-00A-030A-A for the identification and complete description of the access panels.

NOTE

Examine the first aid kit contents to make sure that nothing is expired.

Table 1. 1 year inspection

Task No.	Task type	Task description	Reference (DMC)	Zone	Access	Ini-tials
21-20-00-001	OPC	Do an operational check of the inlet duct water drain.	505-A-30-20-01-00A-281A-A	110	N/A	
25-61-00-004	DET	Do a detailed inspection of the Emergency Locator Transmitter (ELT) system components, if installed.	Refer to ICA AA-14021.	193, 230	191AL, 192AR, 210AL, 220AR	
25-61-00-005	FNC	Do a functional check of the ELT system, if installed.	Refer to ICA AA-14021.	193, 230	191AL, 192AR, 210AL, 220AR	
26-20-00-001	DET	*Do a detailed inspection of portable fire extinguisher bottle and bracket. (RT protection RT-A400 and Ansul 429107).*	505-A-26-20-01-00A-281A-A	200	210AL, 220AR	
26-20-00-002	FNC	*Do a functional check of the fire extinguisher. (RT protection RT-A400 and Ansul 429107).*	505-A-26-20-01-00A-281B-A	210, 220	210AL, 220AR	
53-80-02-001	DET	Do a detailed inspection of the truss pitch restraint, engine mounts fittings, and bushings for accidental damage and environmental deterioration.	505-A-53-30-03-00A-281C-A	191, 192, 193, 432, 433	191AL, 192AR, 432AL, 432BR, 433AL, 433BR	
63-20-00-013	DET	Do a detailed inspection of the internal surface of the mast assembly.	505-A-63-21-01-00A-281B-A	420, 432	432AL, 432BR	
71-30-00-004	OPC	Do an operational check of the engine drains.	505-A-71-70-00-00A-281A-A	193	441AT, 443AT	
71-60-00-002	FNC	Do a functional check of the Inlet Barrier Filter differential pressure switch indicating system.	Refer to the manufacturer's maintenance manual and IPB input (BHT-505-IBF-MM-IPB) in the BHT-505-CMM-V for the procedure and more information.	442	N/A	

POST OFFICE BOX 482 • FORT WORTH, TEXAS 76101

Intentionally blank page

POST OFFICE BOX 482 • FORT WORTH, TEXAS 76101

2 years inspection - Function, data for plans and description

NOTE

Refer to 505-A-06-30-00-00A-030A-A for the identification and complete description of the zones.

Refer to 505-A-06-40-00-00A-030A-A for the identification and complete description of the access panels.

Table 1. 2 years inspection

Task No.	Task type	Task description	Reference (DMC)	Zone	Access	Ini-tials
24-30-00-003	FNC	Do a functional check (capacity check) of the battery.	Refer to the manufacturer's maintenance manual for the procedure and for more information. True Blue Power - Installation Manual and Operating Instructions - TB17 Series Advanced Lithium-Ion Battery	192	192AR	
24-30-00-004	DET	Do a detailed inspection of the battery.	505-A-24-30-04-00A-281A-A	192	192AR	
28-20-00-002	GVI	Do a general visual inspection of the strainer.	505-A-28-20-05-01A-281A-A	171	180CZ, fuel access cover plate	
28-40-00-001	FNC	Do a functional check of the low level sensor.	505-A-28-00-00-00B-340A-A	180	180CZ	
28-40-00-002	FNC	Do a functional check of the fuel level system.	505-A-28-00-00-00C-340A-A	180	180CZ	
34-10-00-001	FNC	Do a functional check (leak test) of the pitot system and of the static system.	505-A-34-10-00-00A-340A-A	210, 220	N/A	
34-22-00-001	FNC	Do a functional check (leak test) of the pitot system and of the static system.	505-A-34-10-00-00A-340A-A	210, 220	N/A	
192-001	Zonal	Do a general visual inspection of the internal areas of zone 192.	505-A-05-40-00-00A-028A-A / 00019	192	192AR	
192-001E	Zonal	Clean zone 192 to remove dust and debris.	505-A-05-40-00-00A-028B-A / 00020	192	192AR	
192-001L	Zonal	Do a general visual inspection, in zone 192, of the electrical bonding strips for condition.	505-A-05-40-00-00A-028C-A / 00021	192	192AR	
192-002L	Zonal	Do a general visual inspection, in zone 192, of the visible areas of the harness shielding material and backshell of the connectors for condition.	505-A-05-40-00-00A-028C-A / 00021	192	192AR	
193-001	Zonal	Do a general visual inspection of the internal areas of zone 193.	505-A-05-40-00-00A-028A-A / 00019	193	191AL, 192AR	
193-001E	Zonal	Clean zone 193 to remove dust and debris.	505-A-05-40-00-00A-028B-A / 00020	193	191AL, 192AR	

POST OFFICE BOX 482 • FORT WORTH, TEXAS 76101

Table 1. 2 years inspection (continued)

Task No.	Task type	Task description	Reference (DMC)	Zone	Access	Ini-tials
193-001L	Zonal	Do a general visual inspection, in zone 193, of the visible areas of the harness shielding material and backshell of the connector for condition.	505-A-05-40-00-00A-028C-A / 00021	193	191AL, 192AR	
193-002L	Zonal	Do a general visual inspection, in zone 193, of the visible areas of the pigtails behind the connectors for correct installation.	505-A-05-40-00-00A-028C-A / 00021	193	191AL, 192AR	

POST OFFICE BOX 482 • FORT WORTH, TEXAS 76101

3 years inspection - Function, data for plans and description

NOTE

Refer to 505-A-06-30-00-00A-030A-A for the identification and complete description of the zones.

Refer to 505-A-06-40-00-00A-030A-A for the identification and complete description of the access panels.

Table 1. 3 years inspection

Task No.	Task type	Task description	Reference (DMC)	Zone	Access	Initials
25-70-01-001	DET	Do a detailed inspection of the cargo hook main beam, beam mounts, fittings, backing plates, and dead link for accidental damage and environmental deterioration, if installed.	505-A-25-71-00-00A-281A-A.	153, 154, 171	153AL, 154AR	
32-70-01-001	GVI	Do a general visual inspection of the forward crosstube assembly for accidental damage and environmental deterioration.	505-A-32-10-03-00A-281A-A	710	N/A	
32-70-02-001	GVI	Do a general visual inspection of the aft crosstube assembly for accidental damage and environmental deterioration.	505-A-32-10-04-00A-281A-A	720	N/A	
32-70-03-001	GVI	Do a general visual inspection of the left skid tube assembly for accidental damage and environmental deterioration.	505-A-32-10-01-00A-281A-A	730	N/A	
32-70-04-001	GVI	Do a general visual inspection of the right skid tube assembly for accidental damage and environmental deterioration.	505-A-32-10-02-00A-281A-A	740	N/A	
53-75-01-002	GVI	Do a general visual inspection of the cabin floor.	505-A-53-10-06-00A-281A-A	140, 210, 220	140AL, 210AL, 220AR	
53-76-01-002	GVI	Do a general visual inspection of the baggage compartment panel.	505-A-53-20-06-00A-281A-A	180	180BR	
53-76-02-002	GVI	Do a general visual inspection of the baggage compartment floor.	505-A-53-20-04-00A-281A-A	180	180BR	
53-80-01-001	DET	Do a detailed inspection of the truss assembly for accidental damage and environmental deterioration.	505-A-53-30-03-00A-281A-A	191, 192, 193, 432, 433	191AL, 192AR, 432AL, 432BR, 433AL, 433BR	
55-30-01-001	GVI	Do a general visual inspection of the external areas of the vertical stabilizer assembly and the tail skid tube for accidental damage and environmental deterioration.	505-A-32-20-01-00A-281A-A, 505-A-55-30-01-00A-281A-A	330	N/A	

Table 1. 3 years inspection (continued)

Task No.	Task type	Task description	Reference (DMC)	Zone	Access	Initials
62-30-00-025	DET	Do a detailed inspection of the swashplate and support assembly for accidental damage and environmental deterioration.	505-A-62-30-01-00A-281A-A	432	432AL, 432BR	
65-10-00-015	GVI	Do a general visual inspection of the forward driveshaft.	505-A-65-10-01-00A-281A-A	443	443AT	
65-10-00-016	GVI	Do a general visual inspection of the fan shaft assembly.	505-A-65-10-02-00A-281A-A	443, 444	443AT, 444AT	
65-10-00-017	GVI	Do a general visual inspection of the aft driveshaft.	505-A-65-10-03-00A-281A-A	444, 450	444AT, 450AT	
65-10-00-018	GVI	Do a general visual inspection of the driveshaft segments.	505-A-65-10-04-00A-281A-A, 505-A-65-10-05-00A-281A-A, 505-A-65-10-06-00A-281A-A, 505-A-65-10-07-00A-281A-A, 505-A-65-10-08-00A-281A-A	450	450AT, 450BT, 450CT	
65-10-00-019	GVI	Do a general visual inspection of the forward adapter.	505-A-65-10-02-00A-281B-A	443, 444	443AT, 444AT	
65-10-00-020	GVI	Do a general visual inspection of the aft adapters.	505-A-65-10-02-00A-281B-A, 505-A-65-20-01-00A-281A-A	443, 444, 450	443AT, 444AT, 450CT	
65-10-00-021	GVI	Do a general visual inspection of the disc packs of the forward and aft driveshafts.	505-A-65-10-09-00A-281A-A	443, 444, 450	443AT, 444AT, 450AT	
65-10-00-022	GVI	Do a general visual inspection of the disc packs of the driveshaft segments.	505-A-65-10-09-00A-281A-A	450	450AT, 450BT, 450CT	
141-001	Zonal	Do a general visual inspection of the internal areas of zone 140.	505-A-05-40-00-00A-028A-A / 00019	140	140AL, 210AL, 220AR	
142-001	Zonal	Do a general visual inspection of the external surfaces of zone 140.	505-A-05-40-00-00A-028A-A / 00019	140	N/A	
211-001	Zonal	Do a general visual inspection of the internal areas of zone 210.	505-A-05-40-00-00A-028A-A / 00019	210	210AL	
212-001	Zonal	Do a general visual inspection of the external surfaces of zone 210.	505-A-05-40-00-00A-028A-A / 00019	210	N/A	
221-001	Zonal	Do a general visual inspection of the internal areas of zone 220.	505-A-05-40-00-00A-028A-A / 00019	220	220AR	
222-001	Zonal	Do a general visual inspection of the external surfaces of zone 220.	505-A-05-40-00-00A-028A-A / 00019	220	N/A	
231-002	Zonal	Do a general visual inspection of the internal areas of zone 230, with the air conditioning kit installed.	505-A-05-40-00-00A-028A-A / 00019	230	210AL, 220AR, Glaresh-ield as-sembly, pedestal front panel	
232-001	Zonal	Do a general visual inspection of the external surfaces of zone 230.	505-A-05-40-00-00A-028A-A / 00019	230	210AL, 220AR	
312-001	Zonal	Do a general visual inspection of the external surfaces of zone 310.	505-A-05-40-00-00A-028A-A / 00019	310	N/A	

POST OFFICE BOX 482 • FORT WORTH, TEXAS 76101

Table 1. 3 years inspection (continued)

Task No.	Task type	Task description	Reference (DMC)	Zone	Access	Initials
321-001	Zonal	Do a general visual inspection of the external surfaces of zone 320.	505-A-05-40-00-00A-028A-A / 00019	320	N/A	
321-001L	Zonal	Do a general visual inspection, in zone 320, of the horizontal stabilizer bonding strap.	505-A-05-40-00-00A-028C-A / 00021	320	N/A	
332-001	Zonal	Do a general visual inspection of the external surfaces of zone 330.	505-A-05-40-00-00A-028A-A / 00019	330	N/A	
332-001L	Zonal	Do a general visual inspection, in zone 330, of the vertical stabilizer bonding strap.	505-A-05-40-00-00A-028C-A / 00021	330	N/A	
431-001	Zonal	Do a general visual inspection of the internal areas of zone 431.	505-A-05-40-00-00A-028A-A / 00019	431	432AL, 432BR	
432-001	Zonal	Do a general visual inspection of the internal areas of zone 432.	505-A-05-40-00-00A-028A-A / 00019	432	432AL, 432BR	
432-001E	Zonal	Clean zone 432 to remove dust, fuel/oil deposits, and debris.	505-A-05-40-00-00A-028B-A / 00020	432	432AL, 432BR	
433-001	Zonal	Do a general visual inspection of the internal areas of zone 433.	505-A-05-40-00-00A-028A-A / 00019	433	433AL, 433BR	
433-001E	Zonal	Clean zone 433 to remove dust, fuel/oil deposits, and debris.	505-A-05-40-00-00A-028B-A / 00020	433	433AL, 433BR	
441-001	Zonal	Do a general visual inspection of the internal areas of zone 441.	505-A-05-40-00-00A-028A-A / 00019	441	441AT	
441-001E	Zonal	Clean zone 441 to remove dust, fuel/oil deposits, and debris.	505-A-05-40-00-00A-028B-A / 00020	441	441AT	
443-001	Zonal	Do a general visual inspection of the internal areas of zone 443.	505-A-05-40-00-00A-028A-A / 00019	443	443AT	
443-001E	Zonal	Clean zone 443 to remove dust, fuel/oil deposits, and debris.	505-A-05-40-00-00A-028B-A / 00020	443	443AT	
443-001L	Zonal	Do a general visual inspection, in zone 443, of the visible areas of the harness shielding material and backshell of the connectors for condition.	505-A-05-40-00-00A-028C-A / 00021	443	443AT	
444-001	Zonal	Do a general visual inspection of the internal areas of zone 444.	505-A-05-40-00-00A-028A-A / 00019	444	444AT	
451-001	Zonal	Do a general visual inspection of the internal areas of zone 450.	505-A-05-40-00-00A-028A-A / 00019	450	450AT, 450BT, 450CT	
471-001	Zonal	Do a general visual inspection of the external surfaces of zone 470.	505-A-05-40-00-00A-028A-A / 00019	470	N/A	

POST OFFICE BOX 482 • FORT WORTH, TEXAS 76101

Intentionally blank page

POST OFFICE BOX 482 • FORT WORTH, TEXAS 76101

4 years inspection - Function, data for plans and description

NOTE

Refer to 505-A-06-30-00-00A-030A-A for the identification and complete description of the zones.

Refer to 505-A-06-40-00-00A-030A-A for the identification and complete description of the access panels.

Table 1. 4 years inspection

Task No.	Task type	Task description	Reference (DMC)	Zone	Access	Initials
53-90-01-001	GVI	*Do a general visual inspection of the external areas of the tailboom assembly for accidental damage and environmental deterioration.*	505-A-53-50-01-00A-281C-A	310	N/A	
D E L E T E D						
53-90-01-003	*GVI*	*Do a general visual inspection of the internal areas of the tailboom assembly for accidental damage and environmental deterioration.*	505-A-53-50-01-00A-281D-A	*191, 192, 310*	191AL, 192AR, 310AB, 310BB, 310CB	
D E L E T E D						
711-001	Zonal	Do a general visual inspection of the external surfaces of zone 710.	505-A-05-40-00-00A-028A-A / 00019	710	N/A	
711-001L	Zonal	Do a general visual inspection, in zone 710, of the bonding strap on the forward crosstube assembly.	505-A-05-40-00-00A-028C-A / 00021	710	N/A	
721-001	Zonal	Do a general visual inspection of the external surfaces of zone 720.	505-A-05-40-00-00A-028A-A / 00019	720	N/A	
721-001L	Zonal	Do a general visual inspection, in zone 720, of the bonding strap on the aft crosstube assembly.	505-A-05-40-00-00A-028C-A / 00021	720	N/A	
731-001	Zonal	Do a general visual inspection of the external surfaces of zone 730.	505-A-05-40-00-00A-028A-A / 00019	730	N/A	
741-001	Zonal	Do a general visual inspection of the external surfaces of zone 740.	505-A-05-40-00-00A-028A-A / 00019	740	N/A	

POST OFFICE BOX 482 • FORT WORTH, TEXAS 76101

Intentionally blank page

POST OFFICE BOX 482 • FORT WORTH, TEXAS 76101

5 years inspection - Function, data for plans and description

NOTE

Refer to 505-A-06-30-00-00A-030A-A for the identification and complete description of the zones.

Refer to 505-A-06-40-00-00A-030A-A for the identification and complete description of the access panels.

Table 1. 5 years inspection

Task No.	Task type	Task description	Reference (DMC)	Zone	Access	Initials
25-61-00-001	RST	**NOTE** *The battery replacement interval is five years or the battery expiration date. Replace the battery in the transmitter of the Emergency Locator Transmitter (ELT) with a lithium battery from the same manufacturer and same part number.* *Replace the battery in the transmitter of the ELT system, if installed.*	Refer to ICA AA-14021.	193	191AL, 192AR	
25-61-00-002	RST	**NOTE** *The battery replacement interval is 10 years for a lithium battery. If an alkaline battery is installed, the battery replacement interval is five years. Replace the battery in the remote control panel indicator of the ELT with a lithium or an alkaline battery from the same manufacturer and same part number.* Replace the battery in the remote control panel indicator of the ELT system, if installed.	Refer to ICA AA-14021.	230	210AL, 220AR	
D E L E T E D						
53-71-01-002	*GVI*	*Do a general visual inspection of the fuselage phase 1 for accidental damage and environmental deterioration.*	505-A-53-00-00-01A-281A-A	*110, 120, 130, 150, 160*	*110AB, 120AB, 125AZ, 126AZ, 129AZ, 130AZ, 153AL, 154AR, 160AB*	
53-72-01-001	*GVI*	*Do a general visual inspection of the fuselage phase 2 for accidental damage and environmental deterioration.*	505-A-53-00-00-04A-281A-A	*120, 130, 150, 160, 210, 220*	*120AB, 125AZ, 126AZ, 129AZ, 130AZ, 153AL, 154AR, 160AB*	
53-72-01-002	GVI	*Do a general visual inspection of the forward belly panel and the mid fuse belly skin bonded panel for accidental damage and environmental deterioration.*	505-A-53-10-00-02A-281A-A	120, 150, 160	153AL, 154AR, 160AB	

Table 1. 5 years inspection (continued)

Task No.	Task type	Task description	Reference (DMC)	Zone	Access	Initials
D E L E T E D						
D E L E T E D						
53-73-01-001	*GVI*	*Do a general visual inspection of the fuselage phase 3 for accidental damage and environmental deterioration.*	505-A-53-00-00-05A-281A-A	*140, 150, 160, 180, 191, 192, 230, 433*	*153AL, 154AR, 160AB, 180AL, 191AL, 192AR, 433AL, 433BR*	
53-73-01-002	GVI	*Do a general visual inspection of the baggage door skin (contour) for accidental damage and environmental deterioration.*	505-A-53-20-00-01A-281A-A	180	180BR	
D E L E T E D						
53-73-02-001	*GVI*	*Do a general visual inspection of the tunnel left beam for accidental damage and environmental deterioration.*	505-A-53-20-00-02A-281A-A	*160*	*160AB, 180AL, 433AL*	
D E L E T E D						
53-73-03-001	*GVI*	*Do a general visual inspection of the tunnel right beam for accidental damage and environmental deterioration.*	505-A-53-20-00-03A-281A-A	*160*	*160AB, 180BR, 433BR*	
D E L E T E D						
53-74-01-001	*GVI*	*Do a general visual inspection of the fuselage phase 4 for accidental damage and environmental deterioration.*	505-A-53-00-00-06A-281A-A	*140, 210, 220*	*140AL, 210AL, 220AR*	
53-74-01-002	GVI	*Do a general visual inspection of the sidebodies and the right passenger window for accidental damage and environmental deterioration.*	505-A-53-10-00-03A-281A-A, 505-A-56-20-01-00A-281A-A	140, 210, 220	140AL, 210AL, 220AR	
D E L E T E D						

POST OFFICE BOX 482 • FORT WORTH, TEXAS 76101

6 years inspection - Function, data for plans and description

NOTE

Refer to 505-A-06-30-00-00A-030A-A for the identification and complete description of the zones.

Refer to 505-A-06-40-00-00A-030A-A for the identification and complete description of the access panels.

Table 1. 6 years inspection

Task No.	Task type	Task description	Reference (DMC)	Zone	Access	Initials
28-10-00-001	OPC	Do an operational check of the forward and aft rollover valves.	505-A-28-10-06-00A-281A-A, 505-A-28-10-08-00A-281A-A	170	180AL, 180CZ	
28-10-00-002	DET	Do a detailed inspection of the forward and aft vent of the fuel.	505-A-28-10-05-00A-281A-A, 505-A-28-10-07-00A-281A-A	160, 180, 433	160AB, 180CZ, 433AL	
34-22-00-002	DIS	*Discard and replace the Standby Attitude Module (SAM) lithium ion battery.*	505-A-34-00-02-02A-921A-A	230	210AL, 220AR	
55-10-01-001	GVI	*Do a general visual inspection of the horizontal stabilizer assembly for accidental damage and environmental deterioration.*	505-A-55-10-01-00A-281A-A	320	N/A	
D E L E T E D						
62-30-00-018	GVI	Do a general visual inspection of the pivot sleeve assembly.	505-A-62-30-01-13A-281B-A	432	432AL, 432BR	
62-30-00-019	GVI	Do a general visual inspection of the support assembly.	505-A-62-30-01-17A-281B-A	432	432AL, 432BR	
62-30-00-020	GVI	Do a general visual inspection of the collective lever assembly.	505-A-62-30-01-01A-281B-A	432	432AL, 432BR	
62-30-00-021	GVI	Do a general visual inspection of the idler assembly.	505-A-62-30-01-04A-281B-A	432	432AL, 432BR	
62-30-00-023	GVI	Do a general visual inspection of the inner ring assembly.	505-A-62-30-01-16A-281B-A	432	432AL, 432BR	
62-30-00-024	GVI	Do a general visual inspection of the collective lever assembly.	505-A-62-30-01-01A-281B-A	432	432AL, 432BR	
D E L E T E D						
62-30-00-027	*DET*	*Do a detailed inspection of the outer ring assembly.*	505-A-62-30-01-10A-281C-A	*432*	*432AL, 432BR*	
D E L E T E D						
63-12-00-003	DET	Do a detailed inspection of the internal areas of the freewheel assembly.	505-A-63-10-02-00A-281A-A. *D E L E T E D* *D E L E T E D*	441, 443	441AT, 443AT	
63-32-00-003	GVI	Do a general visual inspection of the right stop mount assembly.	505-A-63-30-03-00A-281A-A	433	*433BR*	
63-32-00-004	GVI	Do a general visual inspection of the left stop mount assembly.	505-A-63-30-02-00A-281A-A	433	*433AL*	
D E L E T E D						
71-20-01-001	DET	*Do a detailed inspection of the engine mounts assembly for accidental damage and environmental deterioration.*	505-A-71-20-01-00A-281B-A 505-A-71-20-02-00A-281B-A 505-A-71-20-03-00A-281B-A	*441, 443, 444*	*441AT, 443AT, 444AT*	
D E L E T E D						

Table 1. 6 years inspection (continued)

Task No.	Task type	Task description	Reference (DMC)	Zone	Access	Initials
111-001	Zonal	Do a general visual inspection of the internal areas of zone 110.	505-A-05-40-00-00A-028A-A / 00019	110	110AB	
112-001	Zonal	Do a general visual inspection of the external areas of zone 110.	505-A-05-40-00-00A-028A-A / 00019	110	N/A	
121-001	Zonal	Do a general visual inspection of the internal areas of zone 121.	505-A-05-40-00-00A-028A-A / 00019	121	120AB	
121-001L	Zonal	*Do a general visual inspection, in zone 121, of the external surfaces of the forward belly panel for condition of the skin and for possible entry or exit points of lightning discharge.*	505-A-05-40-00-00A-028C-A / 00021	*121*	N/A	
121-002	Zonal	Do a general visual inspection of the external surfaces of zone 121.	505-A-05-40-00-00A-028A-A / 00019	*121*	N/A	
121-002L	Zonal	*Do a general visual inspection, in zone 121, of the visible areas of the harness shielding material, backshell of the connector, and bonding straps for condition and security.*	505-A-05-40-00-00A-028C-A / 00021	*121*	120AB	
122-001	Zonal	Do a general visual inspection of the internal areas of zone 122.	505-A-05-40-00-00A-028A-A / 00019	122	120AB	
123-001	Zonal	Do a general visual inspection of the internal areas of zone 123.	505-A-05-40-00-00A-028A-A / 00019	123	120AB	
124-001	Zonal	Do a general visual inspection of the internal areas of zone 124.	505-A-05-40-00-00A-028A-A / 00019	124	120AB	
125-001	Zonal	Do a general visual inspection of the internal areas of zone 125.	505-A-05-40-00-00A-028A-A / 00019	125	125AZ	
126-001	Zonal	Do a general visual inspection of the internal areas of zone 126.	505-A-05-40-00-00A-028A-A / 00019	126	126AZ	
127-001	Zonal	Do a general visual inspection of the internal areas of zone 127.	505-A-05-40-00-00A-028A-A / 00019	127	120AB	
D E L E T E D						
128-001	Zonal	Do a general visual inspection of the internal areas of zone 128.	505-A-05-40-00-00A-028A-A / 00019	128	120AB	
129-001	Zonal	Do a general visual inspection of the internal areas of zone 129.	505-A-05-40-00-00A-028A-A / 00019	129	129AZ	
131-001	Zonal	Do a general visual inspection of the internal areas of zone 131.	505-A-05-40-00-00A-028A-A / 00019	131	130AZ	
131-001L	Zonal	*Do a general visual inspection, in zone 131, of the visible areas of the cargo hook harness shielding material and the backshell of the connector for condition, if installed.*	505-A-05-40-00-00A-028C-A / 00021	*131*	130AZ	
132-001	Zonal	Do a general visual inspection of the internal areas of zone 132.	505-A-05-40-00-00A-028A-A / 00019	132	130AZ	
133-001	Zonal	Do a general visual inspection of the internal areas of zone 133.	505-A-05-40-00-00A-028A-A / 00019	133	130AZ	
134-001	Zonal	Do a general visual inspection of the internal areas of zone 134.	505-A-05-40-00-00A-028A-A / 00019	134	130AZ	
135-001	Zonal	Do a general visual inspection of the internal areas of zone 135.	505-A-05-40-00-00A-028A-A / 00019	135	130AZ	
136-001	Zonal	Do a general visual inspection of the internal areas of zone 136.	505-A-05-40-00-00A-028A-A / 00019	136	130AZ	

POST OFFICE BOX 482 • FORT WORTH, TEXAS 76101

Table 1. 6 years inspection (continued)

Task No.	Task type	Task description	Reference (DMC)	Zone	Access	Initials
137-001	Zonal	Do a general visual inspection of the external surfaces of zone 130 and the forward crosstube supports.	505-A-05-40-00-00A-028A-A / 00019	130	N/A	
137-001L	Zonal	*Do a general visual inspection, in zone 130, of the cargo hook kit electrical quick release disconnect connector and shielded (over braid) wiring, if installed.*	505-A-05-40-00-00A-028C-A / 00021	130	N/A	
151-001	Zonal	Do a general visual inspection of the internal areas of zone 151.	505-A-05-40-00-00A-028A-A / 00019	151	130AZ, 153AL	
152-001	Zonal	Do a general visual inspection of the internal areas of zone 152.	505-A-05-40-00-00A-028A-A / 00019	152	130AZ, 154AR	
153-001	Zonal	Do a general visual inspection of the internal areas of zone 153.	505-A-05-40-00-00A-028A-A / 00019	153	153AL	
154-001	Zonal	Do a general visual inspection of the internal areas of zone 154.	505-A-05-40-00-00A-028A-A / 00019	154	154AR	
155-001	Zonal	Do a general visual inspection of the external surfaces of zone 150.	505-A-05-40-00-00A-028A-A / 00019	150	N/A	
155-001L	Zonal	*Do a general visual inspection, in zone 150, of the external surfaces of the mid fuse belly skin bonded panel for condition of the skin and for possible entry or exit points of lightning discharge and cargo hook wirings and connectors, if installed.*	505-A-05-40-00-00A-028C-A / 00021	150	N/A	
161-001	Zonal	Do a general visual inspection of the internal areas of zone 160.	505-A-05-40-00-00A-028A-A / 00019	160	160AB	
162-001	Zonal	Do a general visual inspection of the external surfaces of zone 160.	505-A-05-40-00-00A-028A-A / 00019	160	N/A	
172-001	Zonal	Do a general visual inspection of the internal areas of zone 172.	505-A-05-40-00-00A-028A-A / 00019	*172*	*172AL*	
173-001	Zonal	Do a general visual inspection of the external surfaces of zone 170.	505-A-05-40-00-00A-028A-A / 00019	170	N/A	
173-001L	Zonal	Do a general visual inspection, in zone 170, of the external surfaces of the mid fuse belly skin bonded panel for condition of the skin and for possible entry or exit points of lightning discharge.	505-A-05-40-00-00A-028C-A / 00021	170	N/A	
181-001	Zonal	Do a general visual inspection of the internal areas of zone 180.	505-A-05-40-00-00A-028A-A / 00019	180	180AL, 180BR	
182-001	Zonal	Do a general visual inspection of the external surfaces of zone 180.	505-A-05-40-00-00A-028A-A / 00019	180	N/A	
191-001	Zonal	Do a general visual inspection of the internal areas of zone 191.	505-A-05-40-00-00A-028A-A / 00019	191	191AL	
191-001E	Zonal	Clean zone 191 to remove dust and debris.	505-A-05-40-00-00A-028B-A / 00020	191	191AL	
191-001L	Zonal	Do a general visual inspection, in zone 191, of the bonding jumper for condition.	505-A-05-40-00-00A-028C-A / 00021	191	191AL	

Table 1. 6 years inspection (continued)

Task No.	Task type	Task description	Reference (DMC)	Zone	Access	Initials
191-002L	Zonal	Do a general visual inspection, in zone 191, of the visible areas of the harnesses shielding material and backshell of the connectors for condition.	505-A-05-40-00-00A-028C-A / 00021	191	191AL	
194-001	Zonal	Do a general visual inspection of the external surfaces of zone 190.	505-A-05-40-00-00A-028A-A / 00019	190	N/A	
231-001	Zonal	Do a general visual inspection of the internal areas of zone 230, without the air conditioning kit installed.	505-A-05-40-00-00A-028A-A / 00019	230	210AL, 220AR, Glaresh-ield as-sembly, pedestal front panel	
231-001E	Zonal	Clean zone 230 to remove dust and debris.	505-A-05-40-00-00A-028B-A / 00020	230	210AL, 220AR, Glaresh-ield as-sembly, pedestal front panel	
231-001L	Zonal	Do a general visual inspection, in zone 230, of the visible areas of the harness shielding material and backshell of the connector for condition.	505-A-05-40-00-00A-028C-A / 00021	230	210AL, 220AR, Glaresh-ield as-sembly, pedestal front panel	
231-002L	Zonal	Do a general visual inspection, in zone 230, of the visible areas of the pigtails behind the connectors for correct installation.	505-A-05-40-00-00A-028C-A / 00021	230	210AL, 220AR, Glaresh-ield as-sembly, pedestal front panel	
311-001	Zonal	Do a general visual inspection of the internal areas of zone 310.	505-A-05-40-00-00A-028A-A / 00019	310	310AB, 310BB, 310CB	
411-001	Zonal	Do a general visual inspection of the external surfaces of zone 410.	505-A-05-40-00-00A-028A-A / 00019	410	N/A	
421-001	Zonal	Do a general visual inspection of the external surfaces of zone 420.	505-A-05-40-00-00A-028A-A / 00019	420	N/A	
431-001L	Zonal	*Do a general visual inspection, in zone 431, of the forward cowl bonding straps for condition and security.*	505-A-05-40-00-00A-028C-A / 00021	*431*	432AL, 432BR	
433-001L	Zonal	Do a general visual inspection, in zone 433, of the bonding jumpers for condition.	505-A-05-40-00-00A-028C-A / 00021	433	433AL, 433BR	
433-002L	Zonal	Do a general visual inspection, in zone 433, of the visible areas of the harness shielding material and backshell of the connectors for condition.	505-A-05-40-00-00A-028C-A / 00021	433	433AL, 433BR	

POST OFFICE BOX 482 • FORT WORTH, TEXAS 76101

Table 1. 6 years inspection (continued)

Task No.	Task type	Task description	Reference (DMC)	Zone	Access	Initials
434-001	Zonal	Do a general visual inspection of the external surfaces of zone 430.	505-A-05-40-00-00A-028A-A / 00019	430	N/A	
434-001L	Zonal	*Do a general visual inspection, in zone 430, of the external surfaces of the upper-right mid-fuselage access-panel for condition of the skin and for possible entry or exit points of lightning discharge.*	505-A-05-40-00-00A-028C-A / 00021	430	N/A	
435-001L	Zonal	*Do a general visual inspection, in zone 430, of the transmission bonding jumper assembly for condition.*	505-A-05-40-00-00A-028C-A / 00021	*430*	432AL, 432BR	
441-001L	Zonal	Do a general visual inspection, in zone 441, of the visible areas of the harness shielding material and backshell of the connectors for condition.	505-A-05-40-00-00A-028C-A / 00021	441	441AT	
441-002L	Zonal	Do a general visual inspection, in zone 441, of the bonding jumper for condition.	505-A-05-40-00-00A-028C-A / 00021	441	441AT	
442-001	Zonal	Do a general visual inspection of the internal areas of zone 442.	505-A-05-40-00-00A-028A-A / 00019	442	Inlet Barrier Filter (IBF) assembly	
444-001L	Zonal	Do a general visual inspection, in zone 444, of the visible areas of the harness shielding material and backshell of the connector for condition.	505-A-05-40-00-00A-028C-A / 00021	444	444AT	
445-001	Zonal	Do a general visual inspection of the external surfaces of zone 440.	505-A-05-40-00-00A-028A-A / 00019	440	N/A	
452-001	Zonal	Do a general visual inspection of the external surfaces of zone 450.	505-A-05-40-00-00A-028A-A / 00019	450	N/A	
452-001L	Zonal	*Do a general visual inspection, in zone 450, of the tail rotor gearbox bonding strap and pig to the vertical stabilizer connectors.*	505-A-05-40-00-00A-028C-A / 00021	450	N/A	
461-001	Zonal	Do a general visual inspection of the external surfaces of zone 460.	505-A-05-40-00-00A-028A-A / 00019	460	N/A	

POST OFFICE BOX 482 • FORT WORTH, TEXAS 76101

Intentionally blank page

POST OFFICE BOX 482 • FORT WORTH, TEXAS 76101

7 years inspection - Function, data for plans and description

NOTE

Refer to 505-A-06-30-00-00A-030A-A for the identification and complete description of the zones.

Refer to 505-A-06-40-00-00A-030A-A for the identification and complete description of the access panels.

Table 1. 7 years inspection

Task No.	Task type	Task description	Reference (DMC)	Zone	Access	Initials
53-71-01-001	GVI	*Do a general visual inspection of the canted panel for accidental damage and environmental deterioration.*	505-A-53-10-00-01A-281A-A	*110, 120*	110AB, 120AB	
D E L E T E D						
D E L E T E D						
53-71-02-001	GVI	*Do a general visual inspection of the left keel beam for accidental damage and environmental deterioration.*	505-A-53-00-00-02A-281A-A	*125, 129, 131, 133, 135, 136, 153, 171, 191, 193*	125AZ, 129AZ, 130AZ, 153AL, 160AB, 191AL	
D E L E T E D						
53-71-03-001	GVI	*Do a general visual inspection of the right keel beam for accidental damage and environmental deterioration.*	505-A-53-00-00-03A-281A-A	*126, 129, 132, 134, 135, 136, 154, 171, 192, 193*	126AZ, 129AZ, 130AZ, 154AR, 160AB, 192AR	
D E L E T E D						
D E L E T E D						
D E L E T E D						
D E L E T E D						
D E L E T E D						
D E L E T E D						
D E L E T E D						
D E L E T E D						

POST OFFICE BOX 482 • FORT WORTH, TEXAS 76101

Intentionally blank page

POST OFFICE BOX 482 • FORT WORTH, TEXAS 76101

9 years inspection - Function, data for plans and description

NOTE

Refer to 505-A-06-30-00-00A-030A-A for the identification and complete description of the zones.

Refer to 505-A-06-40-00-00A-030A-A for the identification and complete description of the access panels.

Table 1. 9 years inspection

Task No.	Task type	Task description	Reference (DMC)	Zone	Access	Initials
53-75-01-001	SDI	Do a special detailed inspection of the cabin floor.	505-A-53-10-06-00A-281B-A	140	140AL, 210AL, 220AR	
53-76-01-001	SDI	Do a special detailed inspection of the baggage compartment panel.	505-A-53-20-06-00A-281B-A	180	180BR	
53-76-02-001	SDI	Do a special detailed inspection of the baggage compartment floor.	505-A-53-20-04-00A-281B-A	180	180BR	
62-30-00-022	DET	*Do a detailed inspection of the inner ring assembly, anti-rotation bearing and anti-rotation bearing hardware.*	Send the swashplate and support assembly to an approved repair facility for inspection. 505-A-62-30-01-00A-322A-B	432	432AL, 432BR	
171-001	Zonal	Do a general visual inspection of the internal areas of zone 171.	505-A-05-40-00-00A-028A-A / 00019	171	180BR, 180CZ, 180DZ	
171-001L	GVI	Do a general visual inspection, in zone 170, of the bonding straps for condition and security.	505-A-05-40-00-00A-028C-A / 00021	170	180CZ, 180DZ	
331-001	Zonal	Do a general visual inspection of the internal areas of zone 330.	505-A-05-40-00-00A-028A-A / 00019	330	Upper trailing edge cap	

POST OFFICE BOX 482 • FORT WORTH, TEXAS 76101

Intentionally blank page

POST OFFICE BOX 482 • FORT WORTH, TEXAS 76101

10 years inspection - Function, data for plans and description

NOTE

Refer to 505-A-06-30-00-00A-030A-A for the identification and complete description of the zones.

Refer to 505-A-06-40-00-00A-030A-A for the identification and complete description of the access panels.

Table 1. 10 years inspection

Task No.	Task type	Task description	Reference (DMC)	Zone	Access	Initials
25-61-00-002	RST	**NOTE** *The battery replacement interval is 10 years for a lithium battery. Use of Duracell lithium batteries is not recommended.* Replace the battery in the remote control panel indicator of the ELT system, if installed.	Refer to ICA AA-14021.	230	210AL, 220AR	
25-61-00-003	RST	**WARNING** **THE BATTERY REPLACEMENT INTERVAL IS 10 YEARS AND/OR THE BATTERY EXPIRATION DATE. IF YOU DO NOT OBEY, THE EMERGENCY EQUIPMENT CAN OPERATE INCORRECTLY.** **NOTE** *The battery replacement interval is 10 years for a lithium battery. Use of Duracell lithium batteries is not recommended.* Replace the battery in the audio alert indicator of the Emergency Locator Transmitter (ELT) system, if installed.	Refer to ICA AA-14021.	230	210AL, 220AR	
73-20-00-003	DIS	Discard of the pump and metering unit elastomer membrane.	505-A-71-00-01-00A-520A-A. Send the engine to an approved repair facility to replace the elastomer membrane. 505-A-71-00-01-00A-720A-A.	440		

POST OFFICE BOX 482 • FORT WORTH, TEXAS 76101

Intentionally blank page

POST OFFICE BOX 482 • FORT WORTH, TEXAS 76101

12 years inspection - Function, data for plans and description

NOTE

Refer to 505-A-06-30-00-00A-030A-A for the identification and complete description of the zones.

Refer to 505-A-06-40-00-00A-030A-A for the identification and complete description of the access panels.

Table 1. 12 years inspection

Task No.	Task type	Task description	Reference (DMC)	Zone	Access	Initials
26-20-00-003	DIS	*Discard the fire extinguisher. (RT Protection RT-A400 and Ansul 429107).*	505-A-26-20-01-00A-520A-A, 505-A-26-20-01-00A-720A-A	200	210AL, 220AR	

POST OFFICE BOX 482 • FORT WORTH, TEXAS 76101

Intentionally blank page

POST OFFICE BOX 482 • FORT WORTH, TEXAS 76101

15 years inspection - Function, data for plans and description

NOTE

Refer to 505-A-06-30-00-00A-030A-A for the identification and complete description of the zones.

Table 1. ***15 years inspection***

Task No.	*Task type*	*Task description*	*Reference (DMC)*	*Zone*	*Access*	*Initials*
72-00-00-004	*SDI*	*Do a special detailed inspection of the gas generator high speed bearings.*	505-A-71-00-01-00A-520A-A, *Send the engine to an approved repair facility for the inspection.* *www.turbomeca-support.com/* 505-A-71-00-01-00A-720A-A	*440*	*N/A*	

POST OFFICE BOX 482 • FORT WORTH, TEXAS 76101

Intentionally blank page

POST OFFICE BOX 482 • FORT WORTH, TEXAS 76101

1000 landing cycles inspection - Function, data for plans and description

NOTE

Refer to 505-A-06-30-00-00A-030A-A for the identification and complete description of the zones.

Table 1. ***1000 landing cycles inspection***

Task No.	*Task type*	*Task description*	*Reference (DMC)*	*Zone*	*Access*	*Initials*
32-70-00-001	*GVI*	*Do a general visual inspection of the forward crosstube assembly.*	505-A-32-10-03-00A-283A-A	*710*	*N/A*	
32-70-00-002	*GVI*	*Do a general visual inspection of the aft crosstube assembly.*	505-A-32-10-04-00A-283A-A	*720*	*N/A*	
32-70-00-003	*GVI*	*Do a general visual inspection of the skid tube assemblies.*	505-A-32-10-01-00A-283A-A, 505-A-32-10-02-00A-283A-A	*730, 740*	*N/A*	
32-70-00-004	*DET*	*Do a detailed inspection of the skid shoes.*	505-A-32-10-01-01A-283A-A	*730, 740*	*N/A*	
32-70-00-008	*DET*	*Do a detailed inspection of the forward crosstube supports.*	505-A-32-10-03-02A-283A-A	*710*	*N/A*	
32-70-00-009	*DET*	*Do a detailed inspection of the aft crosstube supports.*	505-A-32-10-04-02A-283A-A	*720*	*N/A*	
32-70-00-010	*GVI*	*Do a general visual inspection of the landing gear strap assemblies.*	505-A-32-10-00-01A-283A-A	*700*	*N/A*	
32-70-00-011	*FNC*	*Do an inspection of the landing gear for deflection.*	505-A-32-00-00-00A-283A-A	*700*	*N/A*	
32-70-00-012	*GVI*	*Do a general visual inspection of the saddles.*	505-A-32-10-01-05A-283A-A	*730, 740*	*N/A*	

POST OFFICE BOX 482 • FORT WORTH, TEXAS 76101

Intentionally blank page

POST OFFICE BOX 482 • FORT WORTH, TEXAS 76101

Inspection at engine oil replacement - Function, data for plans and description

NOTE

Refer to 505-A-06-30-00-00A-030A-A for the identification and complete description of the zones.

Refer to 505-A-06-40-00-00A-030A-A for the identification and complete description of the access panels.

Table 1. Inspection at engine oil replacement

Task No.	Task type	Task description	Reference (DMC)	Zone	Access	Initials
79-10-00-001	GVI	Do a general visual inspection of the sight gauge when the engine oil is replaced.	505-A-79-10-01-01A-283A-A	432	432AL	

POST OFFICE BOX 482 • FORT WORTH, TEXAS 76101

Intentionally blank page

POST OFFICE BOX 482 • FORT WORTH, TEXAS 76101

Torque/friction checks - Introduction

NOTE

The components in the list of Table 1 are components that need torque or friction check done at a specified intervals after installation.

Table 1. Torque/friction checks

Reference (DMC)	Task description	Interval						Initials
		1 to 3 FLIGHT HOURS	1 to 5 FLIGHT HOURS	3 to 8 FLIGHT HOURS	10 to 25 FLIGHT HOURS	50 FLIGHT HOURS	100 FLIGHT HOURS	
BHT-505-MM-1, Chapter 62	Do a torque check of the mast nut.		X					
BHT-505-MM-1, Chapter 62	Do a torque check of the pillow block attaching hardware.			X				
BHT-505-MM-1, Chapter 62	Do a tilt friction check of the swashplate and support assembly.				X (1)			
BHT-505-MM-1, Chapter 65	Do a torque check of the attaching hardware of the disc packs of the forward driveshaft, aft driveshaft, and driveshaft segments.				X (2)			
BHT-505-MM-1, Chapter 65	Do a torque check of the attaching hardware of the tail rotor gearbox.				X (2)			
BHT-505-MM-1, Chapter 67	Do a tension check of the anti-torque rotor control cables.					X		
BHT-505-MM-1, Chapter 53	Do a torque check of the attaching hardware of the tailboom assembly.	X (2)						
BHT-505-MM-1, Chapter 55	Do a torque check of the attaching hardware of the horizontal stabilizer assembly.	X (2)						
BHT-505-MM-1, Chapter 55	Do a torque check of the attaching hardware of the vertical stabilizer assembly.	X (2)						
BHT-505-MM-1, Chapter 67	Do a torque check of the attaching hardware of the collective jackshaft assembly.						X (2)	
BHT-505-CMM, Chapter 63	*Do a torque check of the top case stud nuts of the transmission.*						*X* (2)	
Refer to the manufacturer's maintenance manual (PR-505AC-120M) in the BHT-505-CMM-V for the procedure and more information.	*Do a functional check (tension check) of the drive belt of the air conditioning, if installed.*	*X* (3)						

Table 1. Torque/friction checks (continued)

Reference (DMC)	Task description	Interval						Initials
		1 to 3 FLIGHT HOURS	1 to 5 FLIGHT HOURS	3 to 8 FLIGHT HOURS	10 to 25 FLIGHT HOURS	50 FLIGHT HOURS	100 FLIGHT HOURS	
Refer to the manufacturer's maintenance manual (PR-505AC-120M) in the BHT-505-CMM-V for the procedure and more information.	*Do a torque check of the attaching hardware on the air conditioning compressor pulley in accordance with drawing 505AC-330 after installation and anytime the driveshaft and/or pulley are removed and reinstalled.*				*X* (4)			
1 Do the tilt friction check at the specified interval after installation of the swashplate and support assembly or adjustment of the tilt friction, as applicable. 2 Do the torque check at the specified interval after installation of the component and repeat the check at the same interval until the torque is stable. 3 *The belt tension on a newly installed belt should be reset after the first two hours of operation. Replace the belt based on condition.* 4 *Do the torque check at the specified interval if the air conditioner pulley is installed.*								

POST OFFICE BOX 482 • FORT WORTH, TEXAS 76101

Inspection at fuel cell removal/replacement - Function, data for plans and description

NOTE

Refer to 505-A-06-30-00-00A-030A-A for the identification and complete description of the zones.

Refer to 505-A-06-40-00-00A-030A-A for the identification and complete description of the access panels.

Table 1. Inspection at fuel cell removal/replacement

Task No.	Task type	Task description	Reference (DMC)	Zone	Access	Initials
53-73-04-001	GVI	Do a general visual inspection of the fuel tank cavity when the fuel cell is removed or replaced.	505-A-53-20-00-04A-283A-A	171	180CZ	

POST OFFICE BOX 482 • FORT WORTH, TEXAS 76101

Intentionally blank page

POST OFFICE BOX 482 • FORT WORTH, TEXAS 76101

Free wheeling unit oil line filter/screens inspection - Function, data for plans and description

NOTE

Refer to 505-A-06-30-00-00A-030A-A for the identification and complete description of the zones.

Refer to 505-A-06-40-00-00A-030A-A for the identification and complete description of the access panels.

Table 1. Inspection at engine oil replacement

Task No.	Task type	Task description	Reference (DMC)	Zone	Access	Ini-tials
	GVI	Do a special inspection anytime an opening occurs to the Free Wheeling Unit oil supply system between the 50-075-1 filter and the safety screens.	505-A-63-22-00-03A-283A-A	432	432AL	

POST OFFICE BOX 482 • FORT WORTH, TEXAS 76101

Intentionally blank page

POST OFFICE BOX 482 • FORT WORTH, TEXAS 76101

Conditional inspections - Introduction

1. CONDITIONAL INSPECTIONS

A conditional inspection does not occur at a specified time. It is conducted based on the result of known or suspected unusual events, known or suspected malfunctions, or defects.

Evaluate the components that you remove from the helicopter as a result of a conditional inspection as an interrelated group. The removal records that go with each component must cross-reference the part and serial numbers of the other components that you removed for evaluation.

NOTE

The Turbomeca Maintenance Manual Trouble Shooting (MMTS) (X319 R5 460 2) includes all of the instructions for continued airworthiness for the ARRIUS 2R engine, as installed in the Model 505 helicopter and operated in accordance with the limitations contained in the Flight Manual (BHT-505-FM).

Unscheduled maintenance checks for the ARRIUS 2R engine are in addition to those stated in this chapter. Refer to the Turbomeca Maintenance Manual Trouble Shooting (MMTS) (X319 R5 460 2).

Events that require a conditional inspection include (but are not limited to) the following:

- Hard landing (505-A-05-50-01-00B-282A-A / 00074)
- Sudden stoppage (main rotor) power ON or OFF (505-A-05-50-02-00A-284A-A / 00075)
- Sudden stoppage (tail rotor) power ON or OFF (505-A-05-50-03-00A-284A-A / 00076)
- Main rotor overspeed (505-A-05-50-04-00A-284A-A / 00077)
- Overtorque (505-A-05-50-05-00A-284A-A / 00078)
- Compressor stall or surge (505-A-05-50-06-00A-284A-A / 00079)
- Lightning strike (505-A-05-50-07-00A-284A-A / 00080)
- *Overload (*505-A-05-50-08-00A-284A-A / 00081*)*

POST OFFICE BOX 482 • FORT WORTH, TEXAS 76101

Intentionally blank page

POST OFFICE BOX 482 • FORT WORTH, TEXAS 76101

Hard landing - Special irregular inspection

Procedure

NOTE

Do this inspection if you think that the helicopter had a hard landing.

HARD LANDING

NOTE

A hard landing is an incident or accident in which the helicopter hits the ground with sufficient force to cause dangerous pitch movement of the main rotor. Blades that have been in this type of hard landing must be fully visually examined. If you do not find damage, the blades are serviciable.

If, on a hard landing, one of the two main rotor blades comes in contact with the ground, tailboom, or other foreign object, then all main rotor blades are thought to be involved in a sudden stoppage and must be sent to an approved blade repair station for inspection.

If the cabin fuselage touched the ground, then the aircraft is thought to have had loads more than 6 G.

Components removed from helicopter after a hard landing must be examined together as a group. Removal records that go with each component must cross-reference part and serial numbers of other drive system components removed for examination.

1. *Examine the landing gear for condition and correct installation. Examine the skid tubes and cross tubes for damage and deflection.*

2. *Examine cross tube attachment points on the fuselage for damage or distortion.*

3. *Make sure that all cowlings, fairings, and doors fit properly and are aligned. Misaligned cowlings, fairings, or doors can show a twist fuselage, that results in major stresses and damage to components.*

4. *Remove all cowlings and fairings necessary to do a full visual inspection.*

5. *Examine power plant assembly.*

5.1. Refer to SAFRAN ARRIUS 2R Maintenance Manual for applicable inspection.

6. *Examine for leaks in the hydraulic system, interference or binding of hydraulic actuator and controls, and for satisfactory operation.*

7. *Do a full visual inspection of the flight control system from pilot controls to main rotor head. Examine for bent or damaged control tubes, bellcranks, and supports. Carefully examine the pitch link assembly swaged ends for cracks and to swashplate pivot sleeve at the lever attachment points for damage.*

7.1. *Remove damaged control tubes. Use a metal straight edge to roll damaged control tubes on a flat surface to make sure that they are straight. On fixed control tubes the swaged end must be concentric to the tube within* 0.06 inches (1.5 mm) *Total Indicated Runout (TIR). Discard damaged control tubes. If no damage is found, install control tube(s)*

7.2. *If visual inspection shows damage to the swashplate and support assembly, remove the following components for overhaul. Record a hard landing as the cause for removal:*

- *Swashplate and support assembly (*BHT-505-MM, Chapter 62*).*
- *Main rotor hub assembly (*BHT-505-MM, Chapter 62*).*
- *Collar set swashplate drive assembly (*BHT-505-MM, Chapter 62*).*
- *Idler link assembly (*BHT-505-MM, Chapter 62*).*
- *Drive lever assembly (*BHT-505-MM, Chapter 62*).*
- *Control tubes.*
- *Scrap and replace all connecting control bolts.*

7.3. *Examine all bearings for smoothness, axial and radial play.*

8. *Examine truss with a 10X magnifying glass around the transmission mounting points. Carefully examine the transmission restraint system and transmission stop mounts for sheared bolts, and damage to stop pins.*

9. *Examine the transmission LIVE mount assemblies for elastomer tears and deformation of the lower stops for indications of hard contact with the center body.*

10. *Examine complete truss for signs of damage, cracks at welds and contact with drivetrain components.*

11. *Examine the transmission restraint system and transmission mount system for condition at attachment points for cracks.*

12. *Examine the transmission bridge adapters for cracks and loss of nut torque.*

13. *Examine the transmission restraint assembly for damage.*

14. *If one or more of the inspection requirements in* Step 8. *through* Step 13. *shows an unsatisfactory condition, remove the mast assembly (*BHT-505-MM, Chapter 63*) and send it to an approved repair station to perform a mast pole TIR inspection.*

15. *If damage during the inspection requirements of* Step 8. *through* Step 14. *is found, remove the main rotor hub (*BHT-505-MM, Chapter 62*) and send it to an approved repair station for overhaul.*

16. *Examine the mast assembly for indentations caused by static stop(s). If the mast assembly is damaged from too much hard contact with the main rotor static stop, then discard the mast assembly. Remove and overhaul the following components. Record a hard landing as the cause for removal:*

- *Main rotor hub assembly (*BHT-505-MM, Chapter 62*).*
- *Transmission assembly (*BHT-505-MM, Chapter 63*).*
- *Remove the main driveshaft assembly (*BHT-505-MM, Chapter 63*) examine the driveshaft for deformation and cracks. If deformation or cracks are found, scrap the driveshaft.*
- *Transmission restraint.*
- *Main rotor blades (*BHT-505-MM, Chapter 62*).*

17. *Examine the engine mounts and truss attachment points for cracks.*

18. *Examine the tailboom for contact with main rotor blades. If damage is found, do a main rotor sudden stoppage inspection (*505-A-05-50-02-00A-284A-A / 00075*).*

19. *Examine the oil cooler blower shaft for straightness, and impeller and shaft assembly for proper balance.*

20. *Examine the tail rotor blades for damage. If damage is found, do a tail rotor sudden stoppage inspection (*505-A-05-50-03-00A-284A-A / 00076*).*

21. *Examine the tail skid tube and mounting for damage. Examine the tailboom internally and externally for cracks, distortion, waviness, sheared or loose rivets. Examine the tailboom attachment points for elongated bolt holes and for damage fittings at truss junction.*

22. *Examine the fuel and oil systems for damage.*

23. *Remove the baggage bay floor panel, examine fuel cell retention brackets.*

24. *Do a 30 minute ground operation of the helicopter. (BHT-505-FM).*

Check fuel and oil systems for leaks.

25. *If damage to cabin structure or tailboom is such that a major repair is required, remove and overhaul the following components. Record a hard landing as the cause for removal:*

- *Main rotor hub assembly (*BHT-505-MM, Chapter 62*).*
- *Swashplate and support assembly (*BHT-505-MM, Chapter 62*).*
- *Drive collar (*BHT-505-MM, Chapter 62*).*
- *Idler link assembly (*BHT-505-MM, Chapter 62*).*
- *Drive lever assembly (*BHT-505-MM, Chapter 62*).*
- *Control tubes.*
- *Main rotor pitch link assemblies (*BHT-505-MM, Chapter 62*).*
- *Transmission assembly (*BHT-505-MM, Chapter 63*).*
- *Mast Assembly (*BHT-505-MM, Chapter 63*).*
- *Freewheel assembly (*BHT-505-MM, Chapter 63*).*
- *Tail rotor driveshaft assemblies (*BHT-505-MM, Chapter 65*), (*BHT-505-MM, Chapter 65*), (*BHT-505-MM, Chapter 65*), and (*BHT-505-MM, Chapter 65*).*
- *Tail rotor gearbox (*BHT-505-MM, Chapter 65*).*

- *Tail rotor hub assembly (*BHT-505-MM, Chapter 64*).*
- *Tail rotor blade assemblies (*BHT-505-MM, Chapter 64*).*
- *Transmission restraint and mount systems.*

25.1. *Remove the main rotor blades (*BHT-505-MM, Chapter 62*) and send to an approved blade repair facility for examination.*

25.2. *Remove the truss assembly.*

25.3. *Replace all control bolts from hydraulic servo actuator to the main rotor hub.*

25.4. *Main driveshaft must be thought as unserviceable and then discarded.*

26. *Remove the cargo hook and do these functional tests:*

26.1. *Apply* 100 pounds (45360.0 grams) *to the load beam and release electrically.*

26.2. *Apply* 2500 pounds (1134000.0 grams) *to the load beam and release electrically.*

NOTE

Do not release the load beam with the 5000 pounds (2268000.0 grams) *weight attached.*

26.3. *Apply* 5000 pounds (2268000.0 grams) *to the load beam and hold for one minute. Do not release.*

26.4. *If the cargo hook is unsatisfactory, remove it and repair if necessary.*

27. *If no visual damage is found, start engine and examine the main rotor for indications of 1/rev vibration and lateral balance while at flat pitch.*

POST OFFICE BOX 482 • FORT WORTH, TEXAS 76101

Intentionally blank page

POST OFFICE BOX 482 • FORT WORTH, TEXAS 76101

Sudden stoppage (main rotor) power ON or OFF - Special irregular inspection

NOTE

This inspection must be done after an helicopter is suspected of having a main rotor sudden stoppage

MAIN ROTOR SUDDEN STOPPAGE/ACCELERATION

NOTE

Sudden stoppage is defined as any rapid deceleration or acceleration of the drive system whether caused by seizure within the helicopter drive system, sudden freewheel clutch engagement, or by contact of main rotor blade(s) with the ground or with a foreign object of sufficient inertia to cause rapid deceleration.

NOTE

Components removed from helicopter for evaluation following a sudden stoppage/acceleration shall be evaluated as an interrelated group. emoval records accompanying each component shall cross-reference part and serial numbers of other drive system components removed for evaluation.

1. *After sudden stoppage, inspect main rotor blades as follows:*

1.1. *Remove tip cover plate from both main rotor blades.*

1.2. *Inspect blade skin and bonded doublers for visible damage.*

1.3. *Check tip weights. If any movement of tip weights has occurred, blade shall be scrapped.*

2. *After sudden stoppage of the main rotor, remove both main rotor blades. Send blades to a Bell Textron approved blade repair facility for evaluation.*

CAUTION

IF MAIN ROTOR MAST HAS EVIDENCE OF TORSIONAL YIELDING, THE MAST ASSEMBLY, TRANSMISSION ASSEMBLY, MAIN DRIVESHAFT, AND FREEWHEEL ASSEMBLY (OUTER RACE, INNER RACE, AND CLUTCH) SHALL BE CONSIDERED UNSERVICEABLE AND SCRAPPED. MAJOR DAMAGE TO THE MAST ASSEMBLY OTHER THAN TORSIONAL YIELDING REQUIRES REPLACEMENT OF TRANSMISSION TOP CASE. IF TRANSMISSION TOP CASE HAS TO BE SCRAPPED, PYLON BRIDGE ADAPTERS, AND MAST BEARINGS SHALL ALSO BE SCRAPPED.

3. *Remove the following components and visually inspect for evidence of torsional yielding, deformation, cracks, or other obvious damage that would render them non-repairable. Do an overhaul of these components.*

NOTE

If main rotor mast was severed during a main rotor sudden stoppage/acceleration, the main rotor hub assembly must be consider unserviceable and scrapped.

3.1. *Main rotor hub. State main rotor sudden stoppage as reason for removal.*

NOTE

If main rotor mast was severed during a main rotor sudden stoppage/acceleration, with the engine operating, the main rotor mast has sustained torsional yielding.

3.2. *Mast assembly. State main rotor sudden stoppage as reason for removal.*

3.2.1. *Concurrently with the mast assembly overhaul, do the following inspections:*

3.2.1.1. *Do a Total Indicated Runout (TIR) of the main rotor mast.*

3.2.2. *Torsional yielding may be detected by measuring the offset between the mast splines above and below the main rotor trunnion split cone groove using either of the following methods:*

3.2.2.1. *Sliding a 0.1600 inch (4.06 mm) diameter measuring pin across the upper and lower spline.*

3.2.2.2. *Sliding a straight edge across the upper and lower unworn face of the spline (coast side of the spline).*

3.3. *Transmission assembly. State main rotor sudden stoppage as reason for removal.*

POST OFFICE BOX 482 • FORT WORTH, TEXAS 76101

3.4. *Swashplate assembly. State main rotor sudden stoppage as reason for removal.*

NOTE

Replace all control bolts from the hydraulic servo actuators up to main rotor hub.

3.5. *All cyclic and collective control tubes from mixing lever to swashplate.*

3.6. *Main rotor pitch link assemblies.*

3.7. *Freewheel assembly.*

3.8. *Main driveshaft must be considered unserviceable and scrapped.*

3.9. *Inspect transmission restraint and transmission mount system for condition and truss attachment points for cracks.*

3.10. *Inspect engine mounts and at truss attachment points for cracks.*

NOTE

If tail rotor driveshaft failed as a result of torsional overload, ALL hangers, driveshafts, adapters, impeller, and disc couplings shall be considered unserviceable and scrapped. Inspect hanger attachment points for cracks and distortion. Ensure airworthiness of tail rotor gearbox by doing a major overhaul.

If a tail rotor driveshaft has been damaged by main rotor strike or damage other than torsional overload, the hanger assemblies, adapter, and disc couplings fore and aft of the damaged area shall be considered unserviceable and scrapped. Inspect remaining hanger assemblies, adapters, and disc couplings using the magnetic particle or fluorescent penetrant inspection, whichever is applicable, for cracks and distortion.

3.11. *Visually inspect shafts for evidence of twisting and check for out of round and Total Indicated Runout (TIR) exceeding specified limits.*

3.12. *Inspect tail rotor hanger support at tailboom and truss attachment points for cracks.*

3.13. *Inspect tail rotor hanger supports for cracks and distortion.*

4. *Refer to SAFRAN Helicopter Engines, ARRIUS 2R, Maintenance Manual for applicable inspection.*

POST OFFICE BOX 482 • FORT WORTH, TEXAS 76101

Sudden stoppage (tail rotor) power ON or OFF - Special irregular inspection

NOTE

This inspection must be done after a tail rotor sudden stoppage.

TAIL ROTOR SUDDEN STOPPAGE/ACCELERATION

NOTE

Sudden stoppage is defined as all fast deceleration or acceleration of the drive system whether caused by seizure within the helicopter drive system, sudden freewheel clutch engagement, or by contact of tail rotor blade(s) with the ground, water, or with a foreign object of sufficient inertia to cause rapid deceleration.

CAUTION

DAMAGE TO TAIL ROTOR BLADE ASSEMBLY COULD BE PRESENT ALTHOUGH IT MAY NOT BE READILY DETECTED BY STANDARD VISUAL, DIMENSIONAL, AND MAGNETIC PARTICLE OR FLUORESCENT PENETRANT INSPECTION METHODS.

NOTE

Components removed from helicopter for evaluation after a sudden stoppage/acceleration must be examined as an interrelated group. Removal records accompanying each component must cross-reference part and serial numbers of other drive system components removed for evaluation.

1. *Remove and discard tail rotor hub and blade assembly.*
2. *Overhaul the components that follow:*
   - *Tail rotor gearbox assembly.*
   - *Freewheel assembly.*
   - *Tail rotor pitch change mechanism.*
3. *Examine all tail rotor driveshafts, impeller, adapters, flexible coupling discs, and hangers by use of magnetic particle or fluorescent penetrant methods, as applicable.*
4. *Visually examine shafts for evidence of twisting, and examine for out of round and Total Indicated Runout (TIR) more than specified limits.*
5. *Examine tail rotor hanger supports at tailboom and fuselage attachment points for cracks.*
6. *Examine tail rotor hanger supports for cracks and distortion.*

NOTE

If tail rotor driveshaft failed as a result of torsional overload, ALL hangers, driveshafts, adapters, impeller, and disc couplings must be considered unserviceable and discarded. Examine hanger attachment points for cracks and distortion. Make sure of airworthiness of tail rotor gearbox by doing a major overhaul.

If a tail rotor driveshaft has been damaged by main rotor strike or damage other than torsional overload, the hanger assemblies, adapter, and disc couplings fore and aft of the damaged area must be considered unserviceable and discarded. Examine remaining hanger assemblies, adapters, and disc couplings by use of magnetic particle or fluorescent penetrant inspection, as applicable, for cracks and distortion.

7. *Examine tailboom area of tail rotor gearbox mounting studs and dowel pins for cracks with a 10X magnifying glass or by fluorescent penetrant method of inspection.*
8. *Examine the four tailboom attachment points for cracks, distortion damage, and security. Examine torque on nuts of tailboom attachment bolts.*
9. *Examine tailboom internally for cracks, distortion, and loose or missing rivets. Examine external skin of tailboom for cracks paying particular attention to area of horizontal stabilizer and attachment points of vertical fin.*
10. *Examine horizontal stabilizer for cracks and overall condition.*
11. *Examine vertical fin for security and overall condition. Examine tail skid for condition and security. Examine mounting of anti-collision light for security and condition.*
12. Refer to SAFRAN Helicopter Engines, ARRIUS 2R, Maintenance Manual for applicable inspection.

POST OFFICE BOX 482 • FORT WORTH, TEXAS 76101

Intentionally blank page

POST OFFICE BOX 482 • FORT WORTH, TEXAS 76101

Main rotor overspeed - Special irregular inspection

NOTE

This inspection must be done after helicopter is suspected of having a main rotor overspeed, for evaluation following a main rotor overspeed shall be evaluated as an interrelated group.

Sudden stoppage is defined as any rapid deceleration or acceleration of the drive system.

MAIN ROTOR OVERSPEED

NOTE

For main rotor overspeeds above 111% NR and up to 122 % NR, visually inspect main rotor blades and tail rotor blades for skin wrinkles or damage. If damage or wrinkles are detected, do a complete overspeed inspection.

Components removed from an helicopter for evaluation following main rotor overspeed shall be evaluated as an interrelated group. Removal records accompanying each component shall cross-reference part and serial numbers of other drive system components removed for evaluation.

1. *If the main rotor overspeeds in excess of 122 % NR, continue with the following:*

1.1. *Discarding of the following items is mandatory:*

- *Tension/ torsion straps.*
- *Inboard strap fittings and pins.*
- *Latch bolts.*

1.2. *Main rotor blades.*

- *Dimensionally check main rotor blade retention bolt hole for indications of permanent deformation or damage. If inside diameter of bushing in the hole is elongated in excess of 0.0015 inch (0.0381 mm), remove blade from service and return it to a Bell Textron approved major overhaul facility for further evaluation. Any evident looseness of bushing is cause for scrapping the blade.*
- *Remove tip cap assembly from main rotor blade and inspect tip cap attaching screws for deformation. Any deformation of screws or elongation of mating holes in the spar is cause for scrapping the blade.*
- *Visually inspect main rotor blade for skin wrinkles or deformation. If any indication of wrinkles or deformation exists, return blade to a Bell Textron approved major overhaul facility for further evaluation.*
- *If main rotor blades pass the previous inspection, they are acceptable for continued service.*

1.3. *Tail rotor blades.*

- *If one of the tail rotor blades of a pair has been damaged enough that metal has been torn or any bond plies have separated, then both blades and the tail rotor hub must be scrapped.*
- *If contour of a blade has been damaged slightly (distortion) then both blades and tail rotor hub must be scrapped.*
- *If any movement of the tip block or root end balance weights has occurred, scrap tail rotor hub assembly and both tail rotor blades.*
- *If tip block is cracked, scrap tail rotor hub assembly and both tail rotor blades.*
- *If tail rotor blades pass the above inspection requirements and no other discrepancies exist, the blades are acceptable for continued service.*

1.4. *Overhaul the main rotor hub assembly. State main rotor overspeed as reason for removal.*

1.5. *Overhaul the tail rotor hub assembly. State main rotor overspeed as reason for removal.*

1.6. *Inspect oil cooler fan impeller for visible distortion or cracks of the brazed vane joints using dye penetrant inspection method.*

2. *Refer to SAFRAN Helicopter Engines, ARRIUS 2R, Maintenance Manual for applicable inspection.*

POST OFFICE BOX 482 • FORT WORTH, TEXAS 76101

Intentionally blank page

POST OFFICE BOX 482 • FORT WORTH, TEXAS 76101

Overtorque - Special irregular inspection

NOTE

This inspection must be done after an helicopter is suspected of having an overtorque.

OVERTORQUE

NOTE

If overtorque above 100% up to 110% should occur, no inspection is required.

1. *If overtorque above 110%, conduct the following inspections:*

1.1. *Conduct a visual inspection of the following listed assemblies (installed on the helicopter) for any evidence of damage, deformation, yielding, etc.*

- *Main rotor blades and attachments. Blade for skin wrinkles and bond separation. If any indications of wrinkles or deformation exists, send blades to a Bell approved blade repair facility for evaluation.*
- *Main rotor hub assembly.*
- *Transmission top case.*
- *Transmission attachment points on the LIVE mounts and on the restraint assembly.*
- *Truss at transmission restraint assembly attachment points.*
- *Truss at LIVE mount attachment points.*
- *Tail rotor hub, blades, and attachments.*

2. *Examine the transmission electric chip detectors for accumulated material (including freewheel chip detector).*

3. *Remove and examine the main driveshaft (engine-to-transmission) for deformation and cracks. If deformation, cracks, or other damage is found, discard the main driveshaft.*

CAUTION

ONLY A QUALIFIED PERSON CAN OPERATE THE ENGINE AND THE HELICOPTER DURING THE FOLLOWING PROCEDURE.

4. *Start the engine (BHT-505-FM) and check the main rotor, while in a flat pitch condition, for any evidence of a 1/rev vibration or lateral vibration.*

5. *If one or more of the previous inspection requirements, Paragraph 1 through Paragraph 4, show an unsatisfactory condition, a mast runout inspection shall be done.*

6. *Refer to the SAFRAN Helicopter Engines, ARRIUS 2R, Maintenance Manual for applicable inspections.*

POST OFFICE BOX 482 • FORT WORTH, TEXAS 76101

Intentionally blank page

POST OFFICE BOX 482 • FORT WORTH, TEXAS 76101

Engine compressor stall or surge - Special irregular inspection

NOTE

This inspection must be accomplished after helicopter is suspected of engine compressor stall or surge.

ENGINE COMPRESSOR STALL OR SURGE

NOTE

An engine compressor stall or surge can be described as a sharp rumble, a series of loud sharp pops, severe engine vibration, or a rapid rise in Turbine Outlet Temperature (TOT) depending on the severity of stall or surge. When a stall or surge is suspected, follow steps as dictated by reported conditions.

NOTE

The components removed from the helicopter for evaluation following a compressor stall or surge shall be evaluated as a matched group. The records accompanying each component shall cross-reference part and serial numbers of other drive system components removed for evaluation.

1. Obtain a pilot's report and associated 1 hertz or 5 hertz files for that flight related to the suspected compressor stall or surge to determine if it corresponds to one of the following conditions:

- *If the stall or surge occurred on the ground or in flight at any N_R speed or torque setting and there was no noticeable yaw of the helicopter, do Part I and Part II of this inspection.*
- *If the stall or surge occurred on the ground or in flight at any N_R speed or torque setting and there was a noticeable yaw of the helicopter, do Part I, Part II, and Part III of this inspection.*

PART I: INVESTIGATE CAUSE OF COMPRESSOR STALL OR SURGE

POWER PLANT

1. Examine the engine air intake for blockage. If the air intake is found obstructed, refer to the appropriate Safran Arrius 2R Maintenance Manual for further maintenance action. If no blockage is found, go to step 2.

2. Remove the Inlet Barrier Filters (IBF) and examine the compressor intake area as follows:

2.1. Examine the compressor for contamination. If contamination is found, perform a compressor wash. Refer to applicable Safran Arrius 2R Maintenance Manual.

2.2. Inspect compressor rotor for foreign object damage in accordance with the Safran Arrius 2R Maintenance Manual for proper action.

2.3. Test IBF pressure switch as needed, clean IBF filters if suspect clogging.

3. If step 1 and step 2 do not reveal an obvious cause for stall or surge, refer to the Safran Arrius 2R Maintenance Manual for further maintenance action or additional troubleshooting steps.

NOTE

Removal or dismantling of components is not required while performing the following inspection.

PART II: INSPECTION FOR COMPRESSOR STALL OR SURGE WIITHOUT NOTICEABLE YAW

DRIVE SYSTEM

1. Examine the chip detectors of the transmission, freewheel assembly, and the tail rotor gearbox. If the chip detector shows signs of metal particles, perform a serviceability check. Components that fail the serviceability check shall be removed. Make an entry on the applicable components Historical Service Record and attach a tag and write, "THIS COMPONENT WAS REMOVED FROM SERVICE BECAUSE OF A COMPRESSOR STALL/SURGE". Send the component to a Bell Textron approved facility for overhaul.

2. Examine the tail rotor driveshafts for condition and security of attachment.

3. Examine the tail rotor disc pack couplings for cracks or gapping greater than 0.015 inch (0.38 mm).

4. Examine the tail rotor steel driveshaft and adapters for structural failure or distortion exceeding specified limits.

5. Visually examine tail rotor driveshafts for evidence of twisting.

6. Examine the tail rotor driveshaft segments riveted adapters for condition.

7. Examine the oil cooler shaft and forward short shaft for condition.

8. Examine the engine-to-transmission main driveshaft for condition.

9. If no defects were detected that may have been caused by the compressor stall or surge, all drivetrain components are serviceable.

ROTATING CONTROL SYSTEM

1. Examine the swashplate and support assembly, swashplate drive components, the tail rotor pitch change mechanism, and all rotating controls (main and tail). Replace any unserviceable parts as necessary.

TAIL ROTOR HUB AND BLADES

1. Examine the tail rotor hub assembly for condition. If any damage suspected to be related to the stall or surge is found, remove the tail rotor hub assembly. Make an entry on the Historical Service Record and attach a tag on the tail rotor hub assembly and write, "THIS COMPONENT WAS REMOVED FROM SERVICE BECAUSE OF A COMPRESSOR STALL OR SURGE". Send the hub to a Bell Textron approved facility for overhaul.

2. Examine the tail rotor blade(s) for condition. If any damage suspected to be related to the stall or surge is found, remove the tail rotor blade(s). Make an entry on the Historical Service Record and attach a tag on the tail rotor blade{s) and write "THIS BLADE WAS REMOVED FROM SERVICE BECAUSE OF A COMPRESSOR STALL OR SURGE". Send the tail rotor blade(s) assembly to a Bell Textron approved rotor blade repair facility for further inspection and repair.

3. Examine the tail rotor blade bolts for security of attachment. If damage suspected to be related to the stall or surge is found, discard them.

MAIN ROTOR HUB AND BLADES

1. Examine the main rotor blades for damage. Check for wrinkled skin, delamination, deformation, and cracks.

2. If any blade has visible damage suspected to be related to the stall or surge, make an entry on the Historical Service Record and attach a tag on blades and write, "THIS BLADE WAS REMOVED FROM SERVICE BECAUSE OF A COMPRESSOR STALL/SURGE." Send the blade(s) to a Bell Textron approved rotor blade repair facility for further inspection and repair.

3. If no defects were detected on any blade, the blade(s) are serviceable.

NOTE

This inspection does not require disassembly or removal from the helicopter.

4. Examine the main rotor hub for condition. If any damage is suspected to be related to the stall or surge, remove the main rotor hub assembly. Make an entry on the Historical Service Record and attach a tag on the main rotor hub and write, "THIS MAIN ROTOR HUB ASSEMBLY WAS REMOVED FROM SERVICE BECAUSE OF A COMPRESSOR STALL/SURGE." Send the component to a Bell Textron approved facility for overhaul.

5. If no defects were detected on main rotor hub, the main rotor hub is serviceable.

SPECIAL INSPECTION

After 25 hours of operation, examine chip detectors of transmission, freewheel assembly, and tail rotor gearbox. If the chip detector shows signs of metal particles, perform a serviceability check. Components that fail the serviceability check shall be removed. Make an entry on the applicable components Historical Service Record and attach a tag and write "THIS COMPONENT WAS REMOVED FROM SERVICE BECAUSE OF A COMPRESSOR STALL/SURGE". Send the component to a Bell Textron approved facility for overhaul.

PART III: INSPECTION FOR COMPRESSOR STALL OR SURGE WITH NOTICEABLE YAW

ENGINE-TO-TRANSMISSION MAIN DRIVESHAFT

1. Remove and examine the engine-to-transmission main driveshaft for condition.

2. If any damage suspected to be related to the stall or surge, make an entry on the Historical Service Record and attach a tag on the driveshaft and write, "THIS COMPONENT WAS REMOVED FORM SERVICE BECAUSE OF A COMPRESSOR STALL". Send the driveshaft to Bell Textron CPR for evaluation.

3. If no defects were detected, return the engine-to-transmission main driveshaft to service.

TRANSMISSION ASSEMBLY

POST OFFICE BOX 482 • FORT WORTH, TEXAS 76101

1. Remove the transmission input pinion and triplex bearing.

2. Inspect the following gear teeth for scoring and other mechanical damage.

2.1. Input pinion gear.

2.2. Main input driven bevel gear.

3. If any damage suspected to be related to the stall or surge is found, make an entry on the Historical Service Record and attach a tag on the transmission assembly and write, "THIS COMPONENT WAS REMOVED FROM SERVICE BECAUSE OF A COMPRESSOR STALL". Send the component to a Bell Textron approved facility for overhaul.

4. If no defects were detected on the gears, the transmission assembly is serviceable.

TAIL ROTOR GEARBOX

1. Remove the tail rotor gearbox input pinion.

2. Inspect the following gear teeth for scoring and other mechanical damage.

2.1. Input pinion gear.

2.2. Spiral bevel gear.

3. If any damage suspected to be related to the stall or surge is found, make an entry on the Historical Service Record and attach a tag on the tail rotor gearbox and write "THIS COMPONENT WAS REMOVED FROM SERVICE BECAUSE OF A COMPRESSOR STALL". Send the tail rotor gearbox to a Bell Textron approved facility for overhaul.

4. If no defects were detected on the gears, the tail rotor gearbox is serviceable.

FUSELAGE

1. Inspect Tailboom internally and externally for cracks, distortion, waviness, sheared or loose rivets.

2. Inspect the Tailboom attachment points for damage at fittings at Truss Junction.

3. Inspect the vertical fin for condition and security of attachment.

GROUND RUN

1. Perform a ground run for a minimum of 30 minutes with the helicopter light on its skids. Remove and examine the chip detectors of the transmission assembly, freewheel assembly, and tail rotor gearbox.

POST OFFICE BOX 482 • FORT WORTH, TEXAS 76101

Intentionally blank page

POST OFFICE BOX 482 • FORT WORTH, TEXAS 76101

Lightning strike - Special irregular inspection

NOTE

This inspection must be done after a helicopter is suspected of having a lightning strike.

LIGHTNING STRIKE

NOTE

In all of the following instances, if significant damage has been found in an area, inspection shall be expanded in those areas until it extends beyond the zone of damage. Discard components that show the indication of dangerous arc burns.

Because lightning behavior is difficult to predict, conduct a full inspection of the entire helicopter. Lightning damage can show as burn marks, heat discoloration, arc marks, or small weld marks (where metal has melted and resolidified). Honeycomb and other composite materials can exhibit delamination and/or discharge exit points. Localized paint removal in composite materials can show damage to the expanded copper foil protection.

1. *Visually examine for arcing, burning, deformation on all external surfaces of the helicopter. Monitor carefully the main rotor blades and hub, main rotor mast and controls, transmission and mounts, power plant and mounts, main and tail rotor driveshafts, tail rotor gearbox, tail rotor blades and hub, vertical fin, horizontal stabilizer, fwd panel and mid fuselage belly panel this with visible portions of panel fasteners. Examine landing gear skid tubes, crosstubes, and their fuselage attachment points. Examine electrical instruments and systems. Examine the standby compass for erroneous indications. Remove and overhaul defective and /or damaged electrical instrument and systems. Refer to Maintenance Planning Information (MPI) manual, section L/HIRF inspections and do a visual inspection on all L/HIRF protections, such as bonding straps, connector backshells, and jumpers.*

2. If visual indications of damage are present, do as follows:

NOTE

Examine components removed from a helicopter following a lightning strike as an interrelated group. Make entries in component records to cross-reference part and serial numbers of other drive components removed to be examined.

2.1. *Examine the main rotor blades. Blades that show dangerous arcing shall be discarded. Blades that show light to moderate arcing shall be returned to an approved blade repair facility for examination.*

- *Examine the blades for signs of burns and arcing at tip cap, root end closure, buffer pads, and blade bolt bushing. Burn marks can be very minute.*
- *Examine the main rotor blade bonded areas for debonding.*

2.2. *Remove main rotor hub for overhaul. Tell lightning strike as reason for removal.*

2.3. *Remove swashplate and support assembly for overhaul. Tell lightning strike as reason for removal.*

2.4. *Remove main driveshaft, freewheel assembly, transmission, and mast assembly for overhaul and make note of lightning strike as reason for removal.*

2.5. *Examine live mounts and support arms, transmission restraint, engine legs and mounting hard points.*

- *Visually examine the exterior surfaces for signs of arcing or burning. Special attention should be given to contact surface of transmission and engine to their mounting systems, and of mounting systems to the airframe. Monitor carefully the truss mounting interfaces.*
- *If indications of arcing or burning are present, affected parts shall be discarded.*

2.6. *Examine the tail rotor blades and hub. Discard the blades if indications of burns or debonding. Remove tail rotor hub for overhaul. Tell lightning strike as reason for removal.*

2.7. *Remove tail rotor driveshaft bearing hangers and tail rotor gearbox and return for overhaul. Tell lightning strike as reason for removal.*

2.8. *Examine the tailboom fitting for indication of arcing burns around mounting point of tail rotor gearbox and vertical fin.*

2.9. *Examine the power plant assembly.*

- *Refer to SAFRAN Helicopter Engines, ARRIUS 2R, Maintenance Manual for applicable inspection.*

2.10. *Remove the cargo hook and do these functional tests:*

- *Apply* 100 pounds (45360.0 grams) *to the load beam and release electrically.*
- *Apply* 2500 pounds (1134000.0 grams) *to the load beam and release electrically.*
-

NOTE

Do not release the load beam with the 5000 pounds (2268000.0 grams) *weight attached.*

Apply 5000 pounds (2268000.0 grams) *to the load beam and hold for one minute. Do not release.*

- *If the cargo hook is unsatisfactory, remove it and repair if necessary.*

3. If no indications of damage are found, do the following:

NOTE

If no visual indications of damage are shown, examine all ferrous dynamic components by magnetometer with the truss and tail rotor control cables. If Magnetism is present, do the procedures shown in step 2. Demagnetize or replace affected parts.

3.1. *Remove main rotor hub, return to an approved repair facility for internal visual inspection and analysis (not overhaul). Tell lightning strike for reason for removal. An indication of arcing during visual inspection is cause for overhaul of this component.*

3.2. *Remove main rotor mast assembly. Without the removal of the bearing from the mast, examine the visible portions of the bearing for signs of electrical arcing or burning. Turn the bearing during inspection. Examine the bearing for smooth rotation. Visually examine the lower mast bearing race and driving spline on the mast for signs of arcing or burning. If indications of arcing, burning, or roughness of the bearing are present, transmission, mast assembly, and freewheel assembly shall be returned for overhaul. Tell lightning strike as reason of removal.*

3.3. *Remove main rotor transmission, return to an approved repair facility for internal visual inspection and analysis (not overhaul). Tell lightning strike for reason of removal. An indication of arcing during visual inspection is cause for overhaul of this component.*

- Following the transmission inspection, if no indication of arcing was found return assembly to a limited service.
- *After five hours, remove the chip detectors and filter and examine for chips:*
  - *If no chip indications are found, return transmission, to full service.*
  - *If chip indications are found, remove transmission, mast assembly, and freewheel assembly and return for overhaul. Tell lightning strike as reason for removal. Discard all parts that show signs of arcing.*

3.4. *Examine live mounts and support arms, transmission restraint, engine legs with mounting hard points.*

- *Visually examine exterior surfaces for signs of arcing or burning. Special attention should be given to contact surface of transmission and engine to their mounting systems, and of mounting systems to the airframe. Monitor carefully the truss mounting interfaces.*
- *If indications of arcing or burning are shown, affected parts shall be discarded.*

3.5. *Remove tail rotor gearbox, return to an approved repair facility for internal visual inspection and analysis (not overhaul). Tell lightning strike for reason of removal. An indication of arcing during visual inspection is cause for overhaul of this component.*

- Following the tail rotor gearbox inspection, if no indication of arcing was found return assembly to a limited service.
- *After five hours, remove the chip detector and examine for chips:*
  - *If no chip indications are found, return tail rotor gearbox, to full service.*
  - *If chip indications are found, return tail rotor gearbox for overhaul. Tell lightning strike as reason for removal.*

3.6. *Examine the main driveshaft for signs of arcing or burning.*

- *If no sign of arcing is found, return the main driveshaft to service.*
- *Shafts that show arcing or burning shall be discarded.*
- *If indications of arcing or burning are found on the main driveshaft or on a component of the tail rotor driveshafts installation, return the freewheel assembly for overhaul. Tell lightning strike as reason for removal.*

3.7. *Remove swashplate and support assembly, return to an approved repair facility for visual inspection and analysis (not overhaul). Tell lightning strike as reason for removal. An indication of arcing during visual inspection is cause for overhaul of this component.*

POST OFFICE BOX 482 • FORT WORTH, TEXAS 76101

3.8. *Examine the tailboom, horizontal stabilizer, and vertical fin for signs of arcing, burning, or debonding monitor carefully the area around the mounting points for the tail rotor driveshaft hangers and tail rotor gearbox.*

3.9. *Examine the mid fuselage belly panel for signs of arcing, burning, or damage to the expanded copper foil, monitor carefully the areas supporting and/or adjacent to the fuel cell.*

3.10. *Examine the power plant assembly as follows:*

- *Refer to SAFRAN Helicopter Engines, ARRIUS 2R, Maintenance Manual for applicable inspection if arcing is found, return the main driveshaft to service.*

POST OFFICE BOX 482 • FORT WORTH, TEXAS 76101

Intentionally blank page

POST OFFICE BOX 482 • FORT WORTH, TEXAS 76101

Overload - Special irregular inspection

NOTE

Do this inspection after an overload on the helicopter.

OVERLOAD

1. Remove the cargo hook and do these functional tests:

- Apply 100 pounds (45360.0 grams) to the load beam and release electrically.
- Apply 2500 pounds (1134000.0 grams) to the load beam and release electrically.
-

NOTE

Do not release the load beam with the 5000 pounds (2268000.0 grams) weight attached.

Apply 5000 pounds (2268000.0 grams) to the load beam and hold for one minute. Do not release.

- If the cargo hook is unsatisfactory, remove it and repair if necessary.

POST OFFICE BOX 482 • FORT WORTH, TEXAS 76101

Intentionally blank page