A Textron Company

ALERT SERVICE BULLETIN **427-23-46**

27 February 2023
Revision A, 27 March 2023

MODEL AFFECTED: **427**

SUBJECT: **PILOT CYCLIC STICK ASSEMBLY P/N 206-001-344-113, INSPECTION AND REPAIR OF**

HELICOPTERS AFFECTED: **Serial numbers 56001 through 56084, 58001 and 58002.**

COMPLIANCE:

PART I: Within 100 flight hours or 90 days, whichever occurs first, following the release date of this bulletin.

PART II: Prior to next flight as required by **PART I**.

PART III: Within 300 flight hours or 6 months, whichever occurs first, after accomplishment of **PART II**, and every 300 flight hours or 6 months thereafter until accomplishment of **PART V**.

PART IV: Within 1200 flight hours or 24 months whichever occurs first after accomplishment of **PART I** and every 1200 flight hours or 24 months thereafter.

PART V: Within 24 months after accomplishment of **PART II**.

DESCRIPTION:

Bell has recently received a report of a fractured pilot cyclic stick found while performing the Interior and Prestart Check of the 407 Rotorcraft Flight Manual (RFM). The fracture originated at the upper slotted area near the lower base of the cyclic stick.

Consequently, the helicopters of a mixed fleet were inspected, and additional cyclic sticks were found cracked on several 407 helicopters.

Since the 427 helicopter has a similar cyclic stick installation, this bulletin mandates an initial 10X magnifying glass inspection of the lower 4.0 inches (101.6 mm) of the pilot cyclic stick and provides a repair of cracked cyclic stick assemblies 206-001-344-113.

This bulletin also introduces a recurring 10X magnifying glass inspection of the lower 4.0 inches (101.6 mm) of the pilot cyclic stick every 1200 hours or 24 months, whichever occurs first.

PART I of this bulletin mandates a 10X magnifying glass inspection of the lower four inches of the cyclic stick tube assembly (1, Figure 2).

PART II of this bulletin provides a repair for a cracked 206-001-342-101 pilot cyclic stick tube assembly consisting of a stop drill procedure. This repair can only be performed for cracks initiating in the upper slot on the lower part of the stick tube. The maximum repairable crack length is shown in Figure 3 of this bulletin.

PART III of this bulletin introduces a 300 flight hour or 6 months, whichever occurs first, 10X magnifying glass visual inspection of the cyclic stick tubes that have been repaired per **PART II**. This inspection is a recurring inspection until accomplishment of **PART V**.

PART IV of this bulletin introduces a recurring visual inspection with 10X magnification of the lower 4.0 inches (101.6 mm) of the cyclic stick every 1200 flight hours or 24 months, whichever occurs first. This new inspection will be introduced as part of the Scheduled Component Inspections (Every 1200 Hours or 24 Months) in BHT-427-MM, Chapter 5.

PART V of this bulletin mandates the replacement of the repaired cyclic stick tube 206-001-342-101FM accomplished in **PART II**.

Revision A of this bulletin requires customers to contact Bell Product Support when finding a cracked cyclic stick tube assembly. Figures with drill bushings revised to allow a final ream of .1875-inch (4.763mm).

Applicability of this bulletin to any spare part shall be determined prior to its installation on an affected helicopter.

APPROVAL:

The engineering design aspects of this bulletin are Transport Canada Civil Aviation (TCCA) approved.

CONTACT INFO:

For any questions regarding this bulletin, please contact:

Bell Product Support Engineering
Tel: 1-450-437-2862 / 1-800-363-8023 / productsupport@bellflight.com

MANPOWER:

Approximately 4.0 man-hours are required to complete **PART I** of this bulletin.
Approximately 6.0 man-hours are required to complete **PART II** of this bulletin.
Approximately 2.0 man-hours are required to complete **PART III** of this bulletin.
Approximately 2.0 man-hours are required to complete for **PART IV** of this bulletin.
Approximately 2.0 man-hours are required to complete **PART V** of this bulletin.

This estimate is based on hands-on time and may vary with personnel and facilities available.

WARRANTY:
There is no warranty credit applicable for parts or labor associated with this bulletin.

MATERIAL:

Required Material:

The following material is required for the accomplishment of this bulletin and may be obtained through your Bell Supply Center.

Part Number	Nomenclature	Qty (Note)
206-001-342-101	Cyclic Stick Tube Assy	1 (1)

NOTE 1: Only required if the cyclic stick tube exceeds the mechanical and/or corrosion damage limits of **PART I**.

Consumable Material:

The following material is required to accomplish this bulletin, but may not require ordering, depending on the operator's consumable material stock levels. This material may be obtained through your Bell Supply Center.

Part Number	Nomenclature	Qty (Note)	Reference *
2230-00425-00	Primer, Epoxy	1 PT (1)	C-204
2230-06023-00	Polyamide Coating, Polyurethane	5 QT (1)	C-245
2100-00006-00	Cleaning Compound	5 GAL (1)	C-318
2900-05806-00	Aluminum oxide abrasive cloth or paper (400 grit)	A/R	C-406
2230-05688-00	Paint Remover	1 PT (1)	C-436

* C-XXX numbers refer to the consumables list in the BHT-ALL-SPM, Standard Practices Manual

NOTE 1: The quantity indicated is the format the product is delivered in. Actual quantity required to accomplish the instructions in this bulletin may be less.

SPECIAL TOOLS:

Locally manufactured drill guide (Figure 8).
Drill bushings for drill guide may be procured locally or through McMaster-Carr or Carr-Lane.

WEIGHT AND BALANCE:

Not affected.

ELECTRICAL LOAD DATA:

Not affected.

REFERENCES:

BHT-427-IPB Illustrated Parts Breakdown, Chapter 67
BHT-427-MM Maintenance Manual, Chapter 67
BHT-ALL-SPM Standard Practices Manual, Chapter 6

PUBLICATIONS AFFECTED:

BHT-427-MM, Maintenance Manual, Chapter 5 and 67

ACCOMPLISHMENT INSTRUCTIONS:

PART I: 206-001-342-101 Cyclic Stick Tube Inspection

-NOTE-

The cyclic stick tubes 206-001-342-101 are currently on manual allocation due to limited quantities available.

1. Prepare the helicopter for maintenance.

2. Remove the pilot cyclic control stick (BHT-427-MM, Chapter 67).

CAUTION

BE CAREFUL NOT TO DAMAGE THE WIRING OR PUT A STRAIN ON THE WIRING AND CONNECTORS.

-NOTE-

If the cyclic control stick (1, Figure 1) is held by the wiring harness, it may be necessary to completely disconnect the cyclic wiring harness connector from the airframe termination point.

-NOTE-

The lower 4.0 inches (101.6 mm) of the cyclic stick tube shall be inspected using a 10X magnifying glass.

3. Carefully disassemble the cyclic stick (1) from the pivot assembly (7) by removing the nuts (4), washers (5) and bolts (6) enough to be able to examine the lower 4 inches (101.6 mm).

4. Clean the lower 4.0 inches (101.6 mm) of the removed cyclic stick assembly with cleaning compound (C-318) before inspection (Figure 2).

5. Visually inspect the lower 4.0 inches (101.6 mm) of the cyclic stick assembly (Figure 2) for cracks with a 10X magnifying glass. Pay particular attention to the area adjacent to the two slots in the tube where the two bolts secure the tube when installed in the pivot assembly. As per Figure 3, cracks that extend past the edge of the slotted area are not repairable.

6. If no cracks are found, go to step 13 of this bulletin.

7. If a crack is suspected using the 10X magnifying glass visual inspection, disassemble the cyclic stick assembly by removing the cyclic stick grip assembly (BHT-427-MM, Chapter 67).

8. Remove the paint and primer with paint remover (C-436) and thoroughly inspect the lower end of the pilot cyclic stick tube (Figure 2) using the fluorescent penetrant inspection (FPI) method (BHT-ALL-SPM, Chapter 6).

   a. If a crack is found, accomplish **PART II** prior to next flight or replace the cracked cyclic stick tube assembly with a serviceable part meeting the intent of this bulletin.

      (1) Cracks that extend past the edges of the slot are not permitted (Figure 3).

      (2) Cracked slot lengths longer than 0.791 inch (20.09 mm) are not permitted.

   b. If the crack length in the cyclic stick assembly exceeds the criteria of step 8.a, the cyclic stick tube assembly will be considered unserviceable and shall be replaced by a serviceable stick tube assembly meeting the intent of this bulletin prior to next flight.

9. Customers finding a cracked cyclic stick tube must send an email to Bell Product Support Engineering as productsupport@bellflight.com with the following information:

   a. Subject Line: Helicopter model, serial number and ASB number.

Example email subject line:

427 (56001) – ASB 427-23-46RA

   b. The email shall include the following information:

      (1) Total time in-service.

      (2) Cyclic stick tube part number. Ex: 206-001-342-101.

      (3) Clear in focus pictures of the damaged cyclic stick tube assembly.

10. For cyclic stick tubes considered serviceable, polish out any acceptable damage using 400 to 600 grit abrasive cloth or paper (C-406) (Figure 4 Sheet 1 and 2)

11. Examine the pivot assembly for wear, mechanical and corrosion damage (Figure 5). Damage and repair limits for the pilot cyclic stick elbow 206-001-343-003 are provided in Figure 6, if required. Repair or replace as necessary.

12. If no cracks are found, thoroughly clean the cyclic stick tube with water and mild detergent (C-318) to completely remove residual penetrant and developer.

    a. Dry the cyclic stick assembly completely.

    b. Restore removed primer (C-204) and organic finish with polyurethane coating (C-245) before installation of stick into pivot assembly (BHT-ALL-SPM, Chapter 4).

13. Re-assemble the cyclic stick assembly (Figure 1, Item 1) and pivot assembly (7). Install bolts (6), washers (5), nuts (4) and torque to 75 to 95 in-lbs (8.47 to 10.73 Nm).

14. Install the pilot cyclic stick assembly (BHT-427-MM, Chapter 67).

15. Make an entry in the helicopter logbook and historical service records indicating compliance with **PART I** of this Alert Service Bulletin.

PART II: Pilot cyclic stick assembly stop drill repair

1. For cyclic stick tubes with cracks in the slotted area not exceeding the limits of Figure 3, carry out the following stop drill procedure:

-NOTE-

The maximum repairable crack length that can be stop drilled cannot be beyond the outside edge of the slot (Figure 3). The pilot hole for the stop drill shall be in the full thickness of the tube, centered along the centerline of the slot and no further than 0.010-inch (.25 mm) from the edge of the slot (Figure 7 Sheet 1 of 2).

a. Use an automatic center punch to mark the edge of the slot (Figure 7 Sheet 1 of 2).

CAUTION

The location and orientation of the stop drill is critical, it is important to properly secure the stick tube prior to drilling to ensure the drill bit is oriented exactly through the centerline of the tube. Preferably the stick tube should be held in place in a fixing head and drilled on a milling machine. However, since this is not always achievable, Figure 8 shows an example of a drill guide that can be locally manufactured to ensure a clean and well-oriented stop drill hole. Figure 9 shows the installed work aid with the addition of various drill bushings for precise drilling and reaming.

b. Locally manufacture a work aid (Figure 8) and procure drill bushings or have the cyclic stick tube stop-drilled in a milling machine.

c. Install the drill guide on the cyclic stick tube assembly (Figure 9) and line up with the center punch mark using the smallest drill bushing.

d. Secure the drill guide by tightening the nuts only enough to stop the drill guide from moving. Confirm that the drill bushing hole is exactly in line with the center punch mark. Do not over-tighten nuts and bolts to avoid damaging the tube.

e. Drill a pilot hole using the smallest drill guide. Use a drill stop to limit the drilling depth to avoid damaging the opposite side of the tube.

-NOTE-

Stop drill hole must be free of all sharp edges and deburred.

f. Continue the drilling procedure by increasing the stop drill hole diameter until a final ream of 0.1875 inch (4.76 mm) is achieved and deburr holes.

g. Once the stop drill procedure is complete, carry out a fluorescent penetrant inspection (FPI) of the repaired area to ensure the crack is removed and there are no cracks in the stop drill bore. (BHT-ALL-SPM, Chapter 6).

h. Thoroughly clean the cyclic stick tube with water and mild detergent (C-318) to completely remove residual penetrant and developer.

i. Dry the cyclic stick assembly completely.

j. Touch up the repaired area with epoxy polyamide primer (C-204). Refinish the repair as required to match the original finish with polyurethane coating (C-245) (BHT-ALL-SPM, Chapter 4).

2. The repaired cyclic stick tube assembly must be identified as follows:

   a. Identify lower part of the cyclic stick tube assembly directly above the pivot assembly by hand marking or stencil marking part number 206-001-342-101FM (as applicable) with white or silver lettering. The size of the alpha-numeric lettering must be approximately 0.25 inch (6.35 mm) in height.

3. Re-assemble the cyclic stick assembly (Figure 1, Item 1) and pivot assembly (7). Install bolts (6), washers (5), nuts (4) and torque to 75 to 95 in-lbs (8.47 to 10.73 Nm).

4. Install the pilot cyclic control stick (BHT-427-MM, Chapter 67).

5. **PART III** and **PART V** of this bulletin are mandatory after completing **PART II**.

6. Make an entry in the helicopter logbook and historical service records indicating compliance with **PART II** of this Alert Service Bulletin.

PART III: Recurring inspection of the cyclic stick tube 206-001-342-101FM

1. Prepare the helicopter for maintenance.

2. Remove the pilot cyclic control stick (BHT-427-MM, Chapter 67).

3. Carefully disassemble the cyclic stick (1, Figure 1) from the pivot assembly (7) by removing the nuts (4), washers (5) and bolts (6) enough to be able to examine the lower 4.0 inches (101.6 mm).

4. Clean the lower 4.0 inches (101.6 mm) of the removed cyclic stick assembly with cleaning compound (C-318) before inspection (Figure 2).

5. Inspect the lower 4.0 (101.6 mm) inches of the cyclic stick tube using a 10X magnifying glass. Pay particular attention to the stop-drilled repair area.

a. If any cracks are found, remove the cyclic stick tube assembly from service; replace with a serviceable cyclic stick tube assembly meeting the intent of this bulletin.

-NOTE-

Cracks in the circled areas of the inner sleeve inboard of the stop-drilled holes as shown in Figure 7 (Sheet 2 of 2) are not cause for rejection.

b. If no cracks are found, reassemble the cyclic stick assembly (Figure 1, Item 1) and pivot assembly (7). Install bolts (6), washers (5), nuts (4) and torque to 75 to 95 in-lbs (8.47 to 10.73 Nm).

6. Install the cyclic stick assembly (BHT-427-MM, Chapter 67).

7. Make an entry in the helicopter logbook and historical service records indicating compliance with **PART III** of this Alert Service Bulletin.

8. Repeat **PART III** every 300 flight hours or 6 months, whichever occurs first until accomplishment of **PART V**.

PART IV: Introduction of a new 1200-Hour / 24-Month (whichever occurs first) Scheduled Inspection of the cyclic stick tubes.

-NOTE-

The following inspection will be added to BHT-427-MM, Chapter 5.

1. Remove the pilot cyclic control stick assembly (BHT-427-MM, Chapter 67).

2. Clean the lower 4.0 inches (101.6 mm) of the removed cyclic stick tube assembly (1, Figure 2) with cleaning compound (C-318).

3. Visually inspect the pilot cyclic stick tube for cracks with a 10X magnifying glass. Pay particular attention to the area adjacent to the slots in the tube where the two bolts secure the tube in the pivot assembly.

4. If a crack is suspected using the 10X magnifying glass visual inspection, disassemble the cyclic stick assembly by removing the cyclic stick grip assembly (BHT-427-MM, Chapter 67).

5. Remove the paint and primer with paint remover (C-436) and thoroughly inspect lower end of the cyclic stick tube using the fluorescent penetrant inspection (FPI) method (BHT-ALL-SPM, Chapter 6).

6. If any cracks are found, replace the cyclic stick tube, or perform the repair as per **PART II** of this bulletin.

7. If no crack is found, inspect the cyclic stick tube assembly for mechanical and corrosion damage as follows:

   a. Damaged and repaired areas must be separated by 1.0-inch (25 mm) minimum.

   b. Mechanical damage shall not exceed 0.005-inch (0.127 mm) depth and 1/3 tube circumference.

   c. Corrosion damage shall not exceed 0.0025-inch (0.0635 mm) depth before, and 0.005-inch (0.127 mm) after repair and 1/3 tube circumference.

   d. Identify as unserviceable any cyclic stick tube assembly that does not meet these criteria.

8. Inspect bore of cyclic pivot assembly where the stick tube is installed for mechanical and corrosion damage. Bore damage shall not exceed 0.002 inch (0.051 mm) for ¼ of the circumference. Limit of one repair per bore. Repair or replace pivot assembly as required.

9. For cyclic stick tubes inspected and found serviceable, polish out any acceptable damage using 400 to 600 grit abrasive cloth or paper (C-406).

10. Thoroughly clean cyclic stick tube assembly with water and mild soap (C-318) to completely remove residual penetrant and developer. Dry part completely.

11. Touch up area with epoxy polyamide primer (C-204). Refinish paint as required to match the original finish with polyurethane coating (C-245).

12. Re-assemble the pilot cyclic stick assembly and install (BHT-427-MM, Chapter 67).

13. Make an entry in the helicopter logbook and historical service records indicating compliance with **PART IV** of this Alert Service Bulletin.

PART V: Replacement of the stop-drilled cyclic stick tube 206-001-342-101FM

1. Prepare the helicopter for maintenance.

2. Remove the cyclic stick tube assembly 206-001-342-101FM that was repaired per **PART II** of this bulletin.

3. Install a serviceable 206-001-342-101 cyclic stick tube assembly (BHT-427-MM, Chapter 67).

4. Make an entry in the helicopter logbook and historical service records indicating compliance with **PART V** of this Alert Service Bulletin.

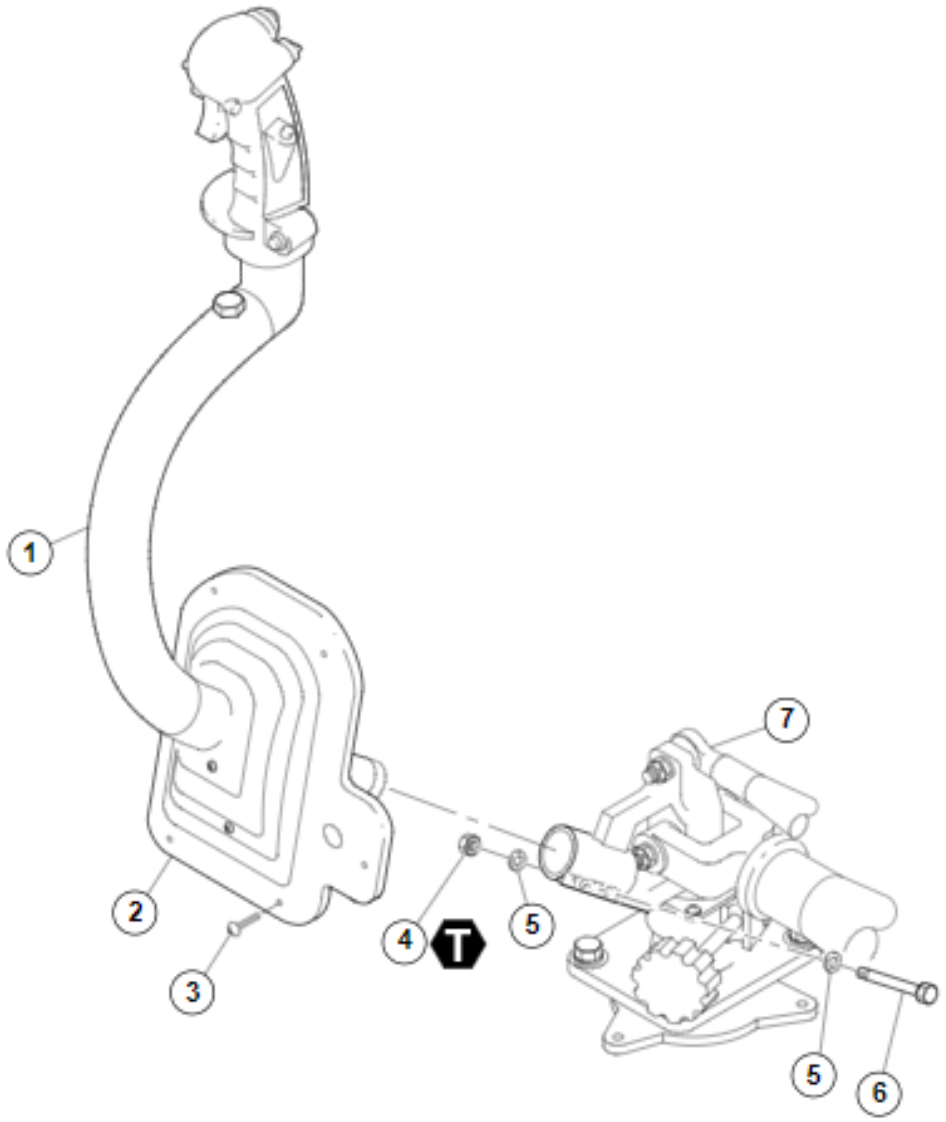

1. Cyclic control stick
2. Boot
3. Screw
4. Nut
5. Washer
6. Bolt
7. Pivot assembly

T 75 TO 95 IN-LBS (8.47 TO 10.73 Nm)

Figure 1 – Pilot Cyclic Stick Assembly

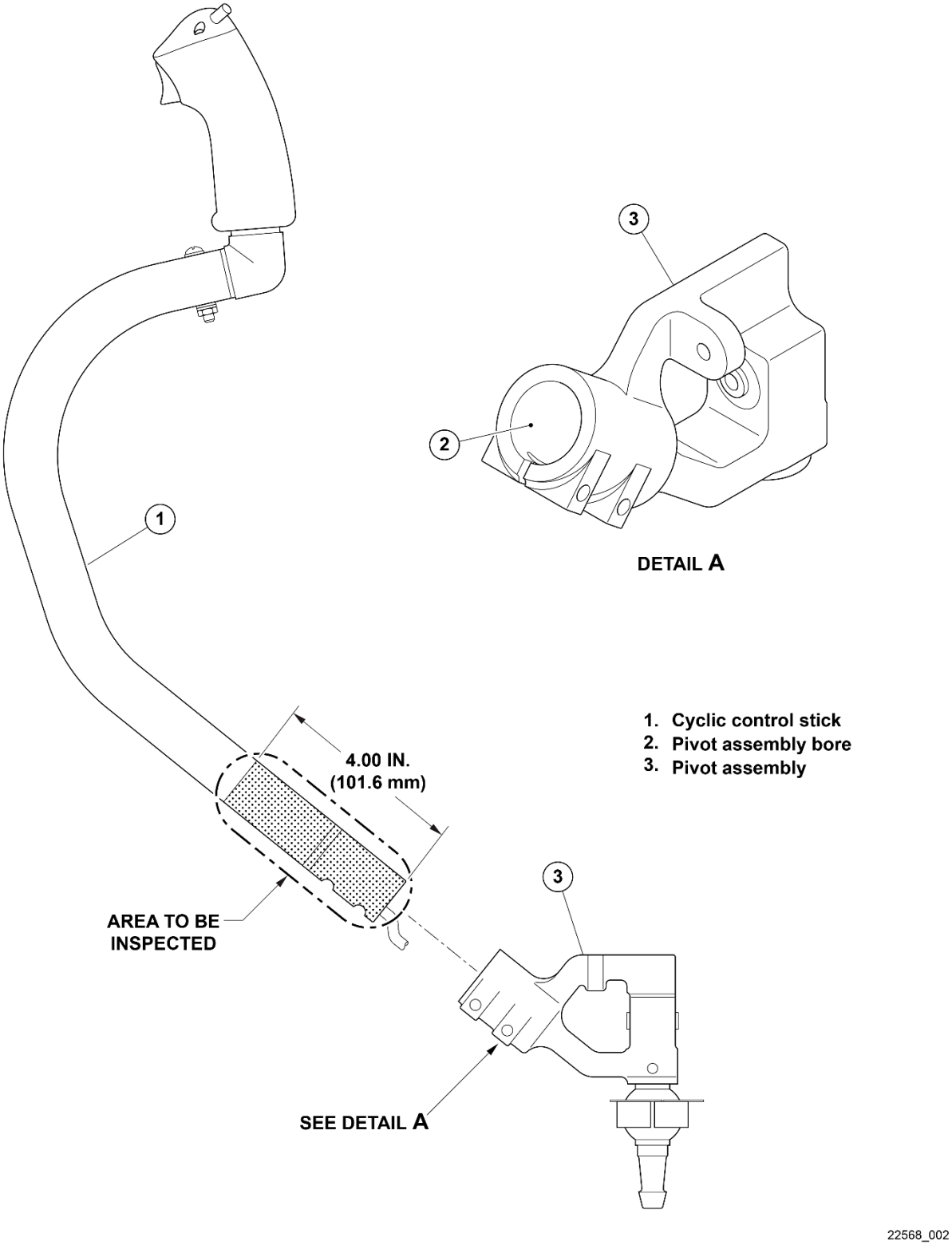

Figure 2 – Pilot Cyclic Stick – 10X Magnifying Glass Inspection Area

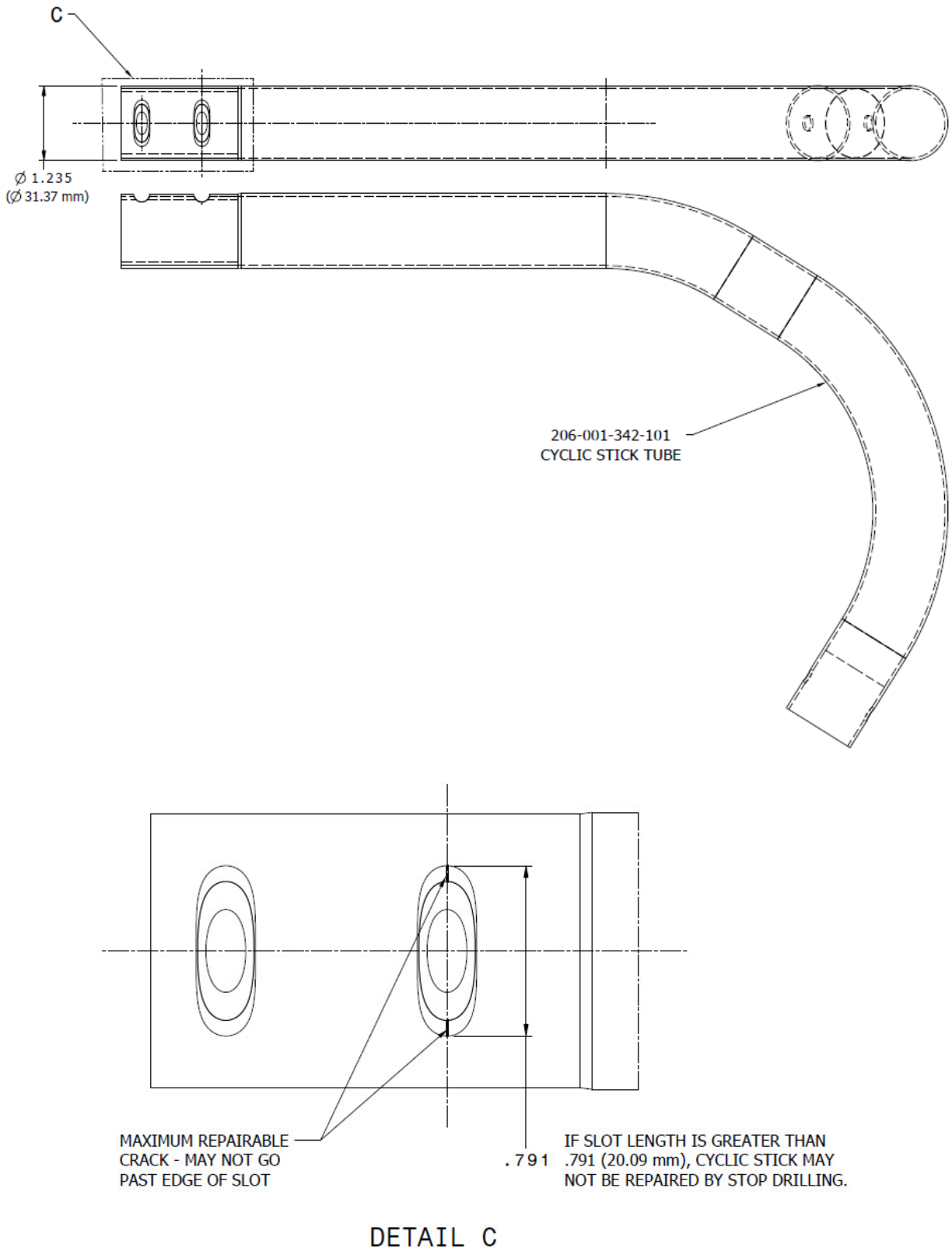

Figure 3 - Typical Crack Location and Maximum Repairable Crack Length

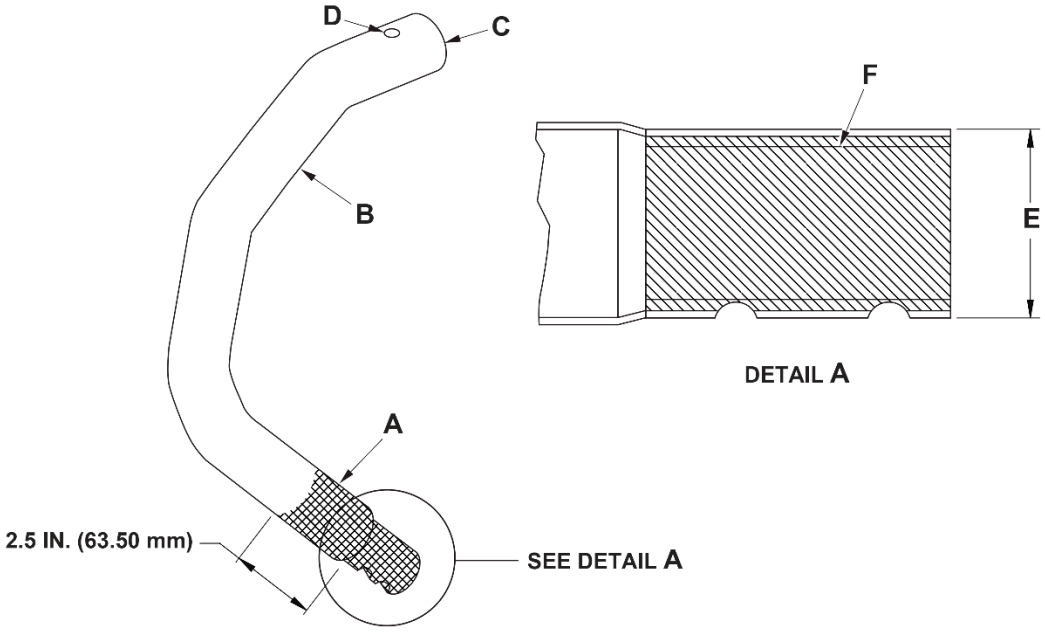

PILOT CYCLIC CONTROL STICK TUBE (206-001-342-101)
MATERIAL: ALUMINUM ALLOY

NO.	REF LTR	CHARACTERISTIC	INSPECTION METHOD	LIMIT
1.	A	Mechanical/corrosion damage	Measure	0.004 inch (0.1016 mm)
2.	A	Maximum area per full depth repair	Measure	0.100 square inch (64.52 mm²)
3.	A	Number of repairs		Two
4.	A	Mechanical/corrosion edge chamfer damage	Measure	0.006 inch x 45° (0.1524 mm) x 45°
5.	A, B	Number of edge chamfer damage	Measure	Two per edge
6.	B	Mechanical/corrosion damage	Measure	0.005 inch (0.127 mm)
7.	B	Maximum area per full depth repair	Measure	0.500 square inch (322.76 mm²)
8.	B	Number of repairs		Not critical
9.	B	Mechanical/corrosion edge chamfer damage	Measure	0.0075 inch x 45° (0.1905 mm) x 45°
10.	C, D, F	Mechanical/corrosion damage	Measure	0.002 inch (0.0508 mm) 1/4 circumference
11.	C, F	Number of inside diameter damage		Two per inside diameter
12.	D	Number of bore damage		One per bore
13.	C	Maximum inside diameter	Measure	1.158 inch (29.413 mm)

22568_003a

Figure 4 – Pilot Cyclic Stick Tube (206-001-342-101)
Wear, Damage and Repair Limits (Sheet 1 of 2)

NO.	REF LTR	CHARACTERISTIC	INSPECTION METHOD	LIMIT
14.	D	Maximum bore diameter	Measure	0.250 inch (6.350 mm)
15.	E	Minimum outside diameter	Measure	1.233 inch (31.32 mm)

LETTER DESIGNATION

A	
B	
C	INSIDE DIAMETER
D	BORE
E	OUTSIDE DIAMETER
F	INSIDE DIAMETER (STEEL SLEEVE)

NOTES

1. No cracks permitted.
2. Damage limits given are after repair.

22568_003b

Figure 4 – Pilot Cyclic Stick Tube (206-001-342-101)
Wear, Damage and Repair Limits (Sheet 2 of 2)

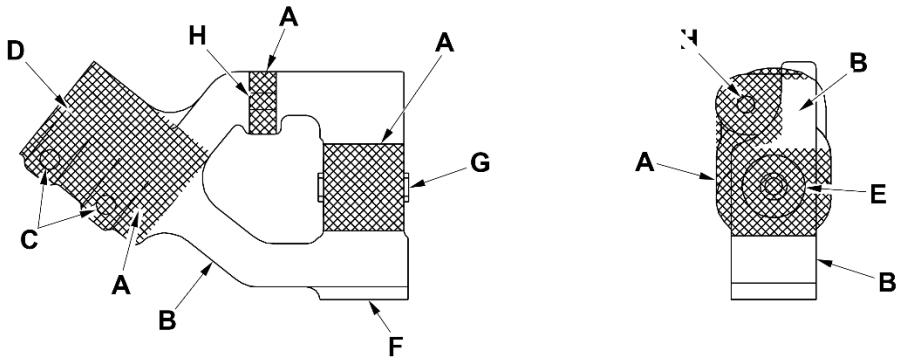

PILOT CYCLIC PIVOT ASSEMBLY (407-001-320-101)
MATERIAL: ALUMINUM ALLOY

NO.	REF LTR	CHARACTERISTIC	INSPECTION METHOD	LIMIT
1.	A	Mechanical/corrosion damage	Measure	0.020 inch (0.508 mm)
2.	A	Maximum area per full depth repair	Measure	0.100 square inch (64.52 mm²)
3.	A	Number of repairs		One per area
4.	A	Mechanical/corrosion edge chamfer damage	Measure	0.030 inch x 45° (0.762 mm) x 45°
5.	A	Number of edge chamfer damage		One per edge
6.	B	Mechanical/corrosion damage	Measure	0.040 inch (1.016 mm)
7.	B	Maximum area per full depth repair	Measure	0.250 square inch (161.30 mm²)
8.	B	Number of repairs		Not critical
9.	B	Mechanical/corrosion edge chamfer damage	Measure	0.060 inch x 45° (1.524 mm) x 45°
10.	B	Number of edge chamfer damage		Not critical
11.	C, D, E, H	Mechanical/corrosion damage	Measure	0.002 inch (0.0508 mm) 1/4 circumference
12.	C, D, E	Number of damage		One per bore/inside diameter
13.	C	Maximum bore diameter	Measure	0.276 inch (7.0104 mm)
14.	E	Maximum bore diameter	Measure	0.9007 inch (22.877 mm)
15.	H	Maximum bore diameter	Measure	0.250 inch (6.350 mm)
16.	F	Mechanical/corrosion damage		Depth: 1/3 of thread Length: 1/4 of thread circumference Number: One per thread, two threads
17.	G	Bearing play	Measure	Radial: 0.006 inch (0.127 mm) Axial: 0.030 inch (0.762 mm)

22568_005a

Figure 5 – Pilot Cyclic Stick Pivot Assembly (407-001-320-101)
Wear, Damage and Repair Limits (Sheet 1 of 2)

LETTER DESIGNATION

A	
B	
C, E, H	BORE
D	INSIDE DIAMETER
F	THREADS
G	BEARING (TWO MKP4)

NOTES

1. No cracks permitted.
2. Damage limits given are after repair.

22568_005b

Figure 5 – Pilot Cyclic Stick Pivot Assembly (407-001-320-101)
Wear, Damage and Repair Limits (Sheet 2 of 2)

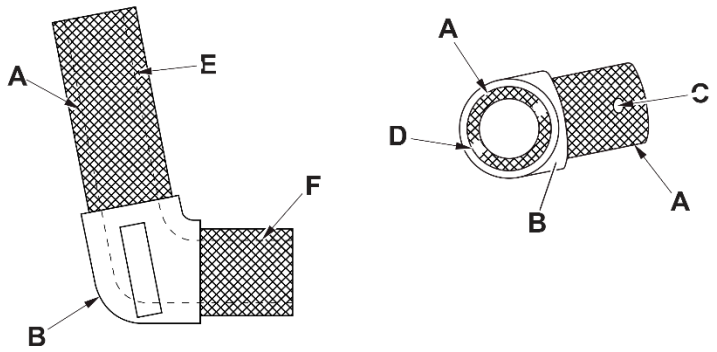

PILOT CYCLIC CONTROL STICK ELBOW (206-001-343-003)
MATERIAL: ALUMINUM ALLOY

NO.	REF LTR	CHARACTERISTIC	INSPECTION METHOD	LIMIT
1.	A	Mechanical/corrosion damage	Measure	0.010 inch (0.254 mm)
2.	A	Maximum area per full depth repair	Measure	0.100 square inch (64.52 mm²)
3.	A, B	Number of damage		Two per area
4.	A	Mechanical/corrosion edge chamfer damage	Measure	0.015 inch x 45° (0.381 mm) x 45°
5.	A, B	Number of edge chamfer damage		Two per edge
6.	B	Mechanical/corrosion damage	Measure	0.050 inch (1.270 mm)
7.	B	Maximum area per full depth repair	Measure	0.250 square inch (161.30 mm²)
8.	B	Mechanical/corrosion edge chamfer damage	Measure	0.075 inch x 45° (1.905 mm) x 45°
9.	C, D	Mechanical/corrosion damage	Measure	0.002 inch (0.0508 mm) 1/4 circumference
10.	C	Maximum bore diameter	Measure	0.250 inch (6.350 mm)
11.	D	Maximum bore diameter	Measure	0.251 inch (6.375 mm)
12.	E	Minimum outside diameter	Measure	1.127 inch (28.626 mm)
13.	F	Minimum outside diameter	Measure	1.152 inch (29.261 mm)

LETTER DESIGNATION

A (INCLUDING INSIDE DIAMETER) C, D BORE
B E, F OUTSIDE DIAMETER

NOTES

1. No cracks permitted.
2. Damage limits given are after repair.

22568_004

Figure 6 – Pilot Cyclic Stick Elbow (206-001-343-003)
Wear, Damage and Repair Limits

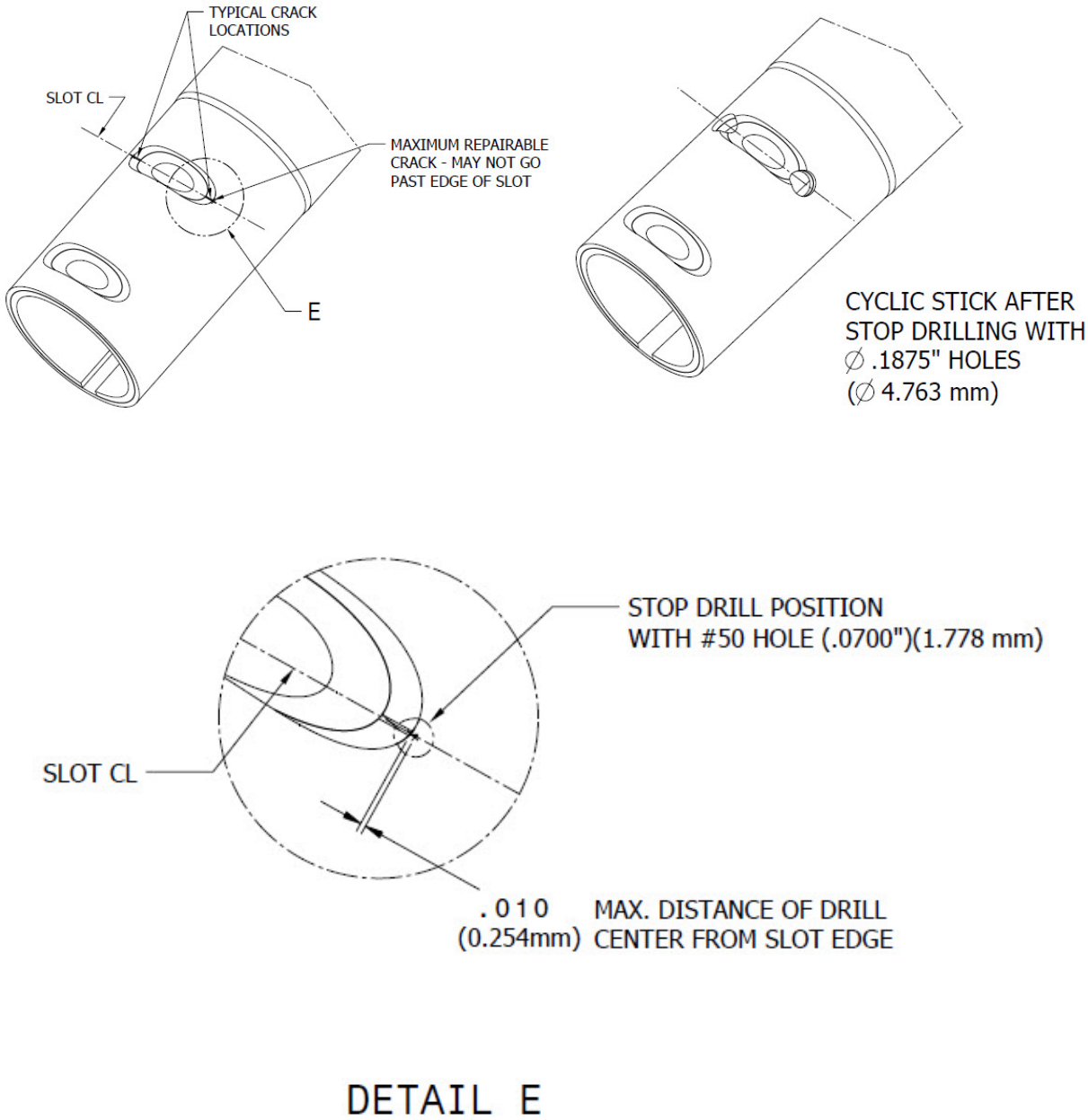

Figure 7 (Sheet 1 of 2) – Pilot Hole Location for Stop Drill

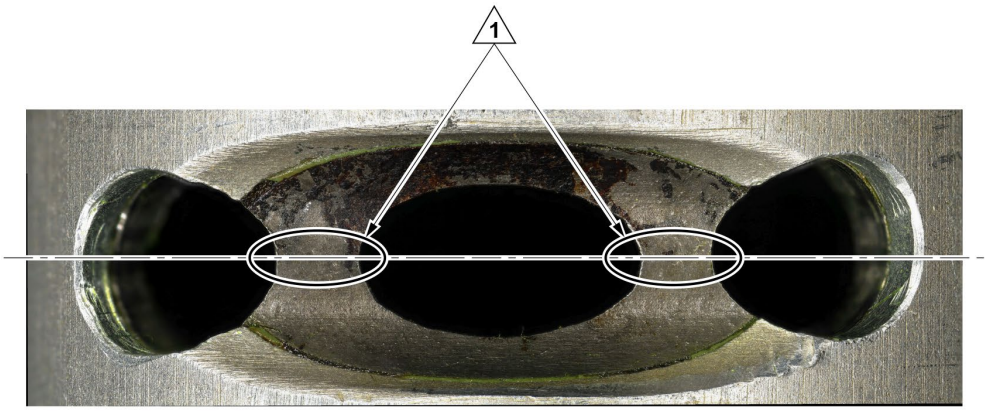

DETAIL A

NOTE

1 **Cracks in the circled areas of the inner sleeve inboard of the stop-drilled holes are not cause for rejection.**

22568_003

Figure 7 (Sheet 2 of 2) – Stop-Drilled Holes and Inner Sleeve

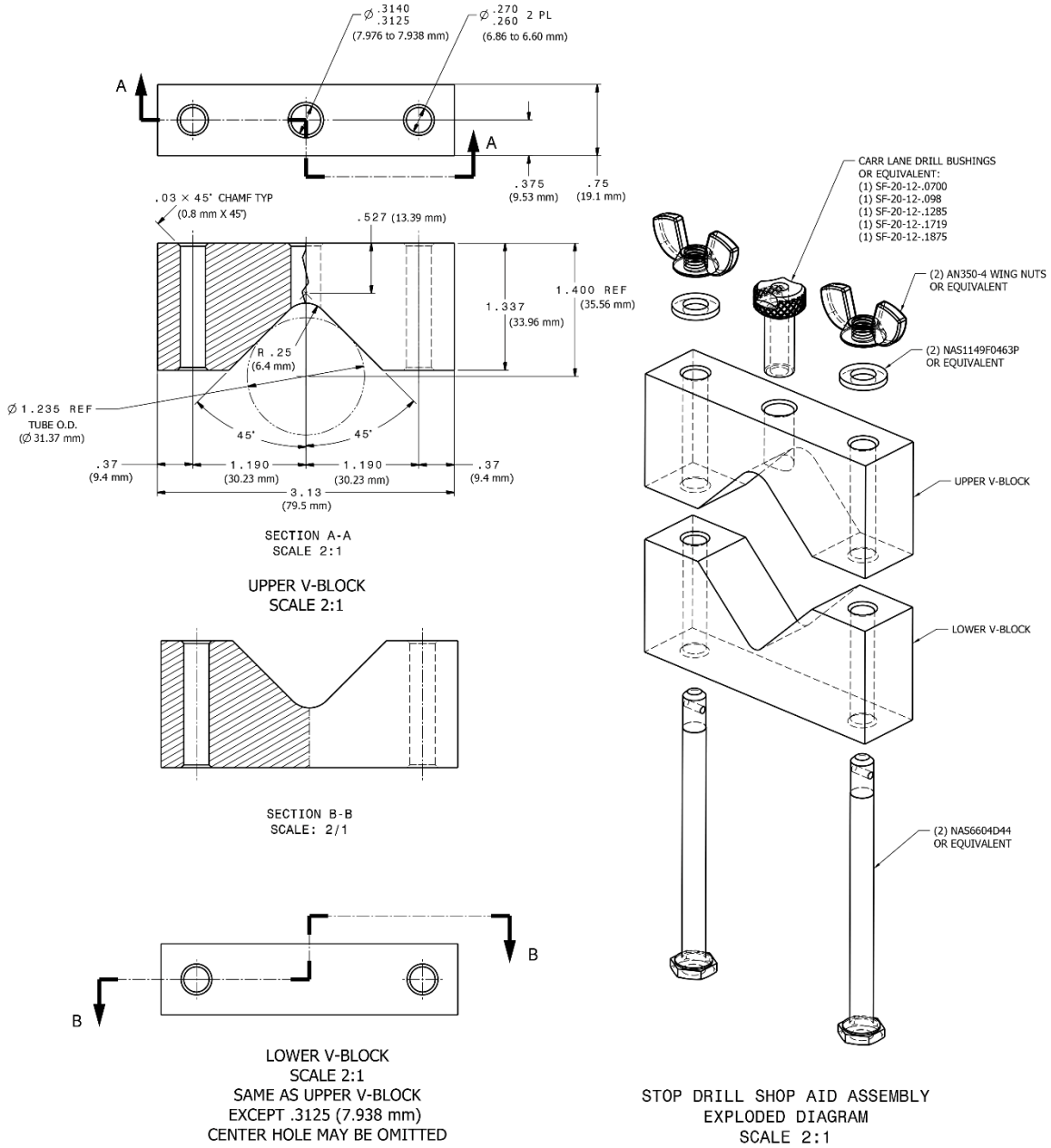

NOTES:

1. ALL DIMENSIONS IN INCHES. MILLIMETERS IN PARENTHESES.
2. V-BLOCK MATERIAL IS OPTIONAL. METALS, PLASTICS, OR 3D PRINTED PLASTICS ARE ACCEPTABLE.
3. BREAK ALL SHARP EDGES WITH .015 (0.38 mm) RADIUS OR .015 (0.38 mm) X 40-50 DEGREE CHAMFER.
4. TOLERANCES ON DECIMALS (INCHES):
   .XXX ±.010 (0.25 mm)
   .XX ±.03 (0.8 mm)
   .X ±.1 (3 mm)
   TOLERANCE ON ANGLES ±1/2°
5. LOCK SCREW (NOT SHOWN) TO SECURE BUSHING IS OPTIONAL.

23503_002

Figure 8 – Drilling Guide V-Blocks (Work aid)

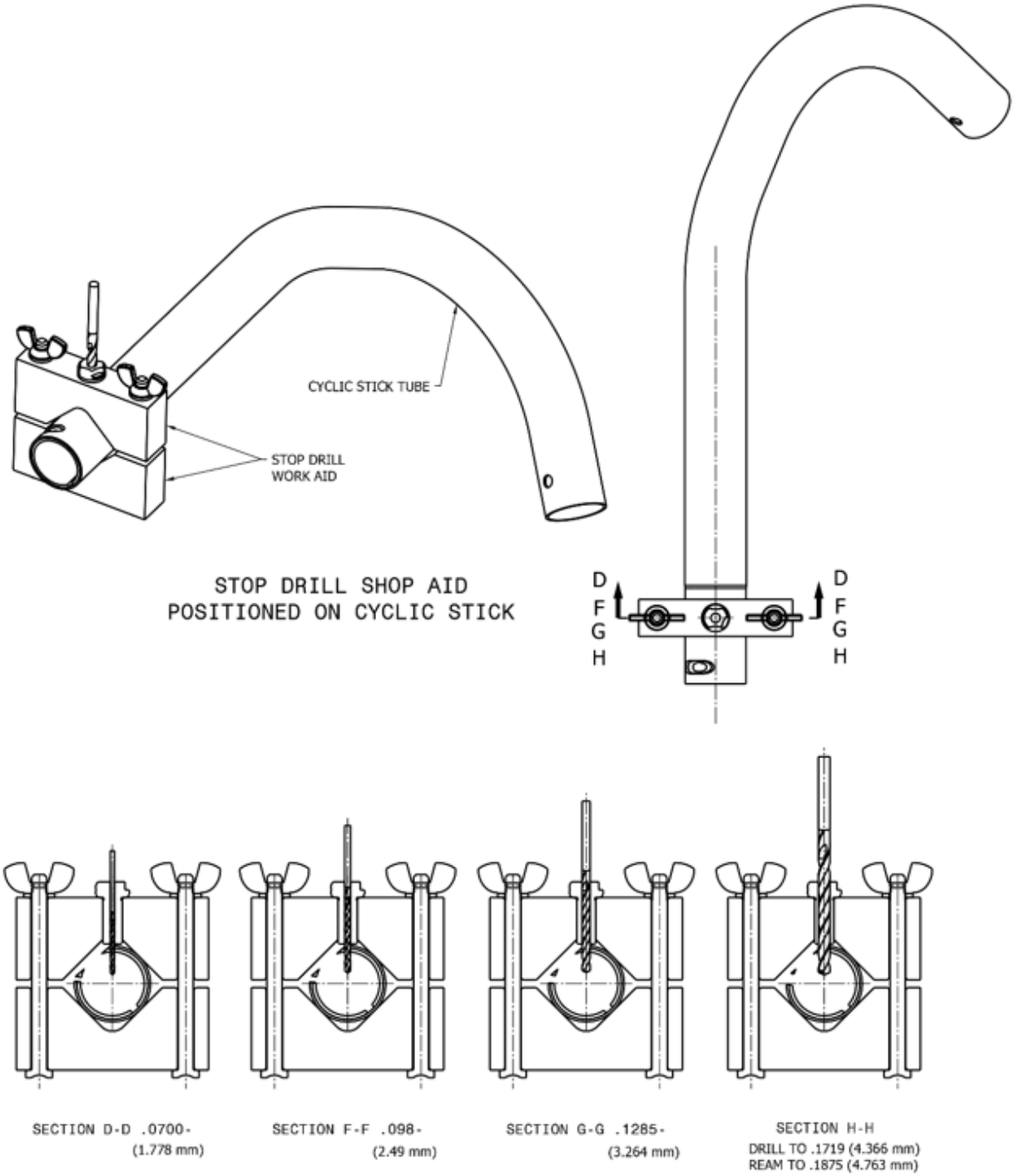

Figure 9 – Cyclic Stick Tube with Work aid Installed