A Textron Company

ALERT SERVICE BULLETIN **505-24-41**

2 October 2024
Revision A 1 July 2025

MODEL AFFECTED: **505**

SUBJECT: **TAILCONE ASSEMBLY SKINS AND FRAMES, ONE-TIME AND RECURRING INSPECTION OF.**

HELICOPTERS AFFECTED: **Serial numbers 65011 through subsequent.**

COMPLIANCE:

PART I – Prior to, or upon reaching, 1750 tailcone assembly flight hours. For affected helicopters with tailcone assemblies between 1725 and 1750 flight hours, or more than 1750 hours, within 25 flight hours.

PART II – Every 50 flight hours, if required following accomplishment of **PART I**.

PART III – Within 165 flight hours or 6 months, whichever comes first following the release date of **Revision A** of this bulletin, and every 330 flight hours thereafter.

DESCRIPTION:

Bell has been made aware of a quality escape in the manufacturing of certain tailcone assemblies of the model 505 where gapping conditions may exist between the frames and skins of the tailcone assembly. Refer to **Table 1** for affected tailcone assembly serial numbers.

PART I of this Alert Service Bulletin (ASB) provides instructions to perform a one-time inspection internally to the tailcone assembly for gapping conditions between the skins and frames at boom stations BS 96.1 and BS 102.8 where the horizontal stabilizer attachment fittings are located.

PART II of this bulletin provides instructions to perform a recurring 50 flight hour inspection if gapping conditions greater than 0.003 inch (0.076 mm) up to the fastener shank are found during the inspection accomplished in **PART I**.

Revision A of this bulletin introduces **PART III** which adds additional locations on the tailcone assembly requiring an initial and recurring inspection for loose, damaged, or missing rivets. The inspection intervals of **PART III** include maintenance tolerance consideration. Owners/operators having accomplished **PART I** at the initial release of this bulletin are not required to perform it again at the release of **Revision A** of this bulletin.

Applicability of this bulletin to any spare or replacement parts shall be determined prior to its installation on an affected helicopter.

APPROVAL:

The engineering design aspects of this bulletin are Transport Canada Civil Aviation (TCCA) approved.

CONTACT INFO:

For any questions regarding this bulletin, please contact:

Bell Product Support Engineering
Tel: 1-450-437-2862 / 1-800-363-8023 / productsupport@bellflight.com

MANPOWER:

Approximately 4.0 man-hours are required to complete **PART I** of this bulletin.
Approximately 1.0 man-hour is required to complete **PART II** of this bulletin.
Approximately 2.5 man-hours are required to complete **PART III** of this bulletin.
This estimate is based on hands-on time and may vary with personnel and facilities available.

WARRANTY:

There is no warranty credit applicable for parts or labor associated with this bulletin.

MATERIAL:

Required Material:
The following material is required for the accomplishment of this bulletin and may be obtained through your Bell Supply Center.

Part Number	Nomenclature	Qty (Note)
SLS-030-600-025	TAILCONE ASSEMBLY WITH DECALS	1 (1)

NOTE 1: Only required if replacement of the tailcone assembly is required during accomplishment of **PART I** or **PART II** of this bulletin.

Consumable Material:

None required.

SPECIAL TOOLS:

None required.

WEIGHT AND BALANCE:

Not affected.

ELECTRICAL LOAD DATA:

Not affected.

REFERENCES:

505-MM Maintenance Manual, Chapters 53 and 55.
General Information Letter GEN-22-154, Procedure for Requesting Bell-Approved Structural Repairs.

PUBLICATIONS AFFECTED:

None affected.

ACCOMPLISHMENT INSTRUCTIONS:

PART I – One-time tailcone assembly inspection.

1. Prepare the helicopter for maintenance.

-NOTE-

Identification of the tailcone assembly may be accomplished by verification of the applicable Historical Service Records. If the HSRs are not available, go to step 2, otherwise go to step 3.a.

2. Remove the exhaust fairing (444AT) (DMC-505-A-53-40-05-00A-520A-A).

3. Verify serial number of the installed tailcone assembly (1, Figure 1, View A) marked on the identification plate (2).

   a. If the tailcone assembly (1) serial number identified **is** listed in **Table 1**, go to step 4.

   b. If the tailcone assembly (1) serial number identified **is not** listed in **Table 1**, go to step 14.

4. Remove horizontal stabilizer assembly (DMC-505-A-55-10-01-00A-520A-A).

5. Remove aft tailboom access panel (310BB) (DMC-505-A-53-50-07-00A-520A-A).

6. Using a feeler gauge, on the whole internal circumference of the tailcone assembly, check for gaps between the skins and frames at stations BS 96.1 and BS 102.8 (Figure 2) at each fastener location up to the shank of all the fasteners.

   a. If no gaps, or gaps of 0.003 inch (0.076 mm) or less up to the shank of the fasteners are found, go to step 12.

   b. If gaps greater than 0.003 inch (0.076 mm) up to the shank of the fasteners are found, note the locations and amount of the gap. While looking aft, use the 12 o'clock position at the top of the tailcone assembly, as a reference point, to identify gap locations (Figure 1, View B). Go to step 6.c.

-NOTE-

The purpose of the action in step 6.c. below is so Bell can quantify the number of impacted owners/operators that will be required to perform the recurring inspection of **PART II** of this bulletin.

   c. Send an email to Product Support Engineering (PSE) at productsupport@bellflight.com with the following information:

      (1) In the **subject line** of the email, include the following information:

         (a) The helicopter model.

         (b) The helicopter serial number.

         (c) The text **ASB 505-24-41**.

         (d) The Total Time In Service (TTIS) of the helicopter.

         (e) The text AFFECTED.

Example email subject line:
505 (65005) – ASB 505-24-41 - (TTIS 1350 hours) - AFFECTED

(2) In the **body** of the email, include the following:

(a) Location(s) and dimension of the gap(s) identified in step 6.b.

(b) Serial number of the affected tailcone assembly.

(c) Total Time In Service (TTIS) of the affected tailcone assembly.

(3) Go to step 7.

7. Remove the forward driveshaft cover (450AT) (DMC-505-A-53-50-02-00A-520A-A).

8. Remove the mid driveshaft cover (450BT) (DMC-505-A-53-50-03-00A-520A-A).

9. On the whole **internal** and **external** circumference at boom stations BS 96.1 and BS 102.8, visually inspect the tailcone assembly skins for cracks and fasteners for looseness (Figure 2).

   a. If no cracks are found and fasteners are not found loose, go to step 10.

   b. If cracks or loose fasteners are found, submit a Structural Repair request to Product Support Engineering (PSE) at productsupport@bellflight.com for a disposition (General Information Letter GEN-22-154). Once PSE has provided a disposition, go to step 10.

10. Install mid driveshaft cover (450BT) (DMC-505-A-53-50-03-00A-720A-A).

11. Install forward driveshaft cover (450AT) (DMC-505-A-53-50-02-00A-720A-A).

12. Install aft tailboom access panel (310BB) (DMC-505-A-53-50-07-00A-720A-A).

13. Install horizontal stabilizer assembly (DMC-505-A-55-10-01-00A-720A-A).

14. If removed, install exhaust fairing (444AT) (DMC-505-A-53-40-05-00A-720A-A).

15. Make an entry in the helicopter logbook and historical service records indicating compliance with **PART I** of this Alert Service Bulletin.

16. For tailcone assemblies that were found with **any** gaps greater than 0.003 inch (0.076 mm), accomplish **PART II** of this bulletin **every 50 flight hours** until the airworthiness life limitation of the tailcone assembly is reached.

PART II – Recurring 50 flight hour tailcone assembly inspection.

1. Prepare the helicopter for maintenance.

2. Remove the forward driveshaft cover (450AT) (DMC-505-A-53-50-02-00A-520A-A).

3. Remove the mid driveshaft cover (450BT) (DMC-505-A-53-50-03-00A-520A-A).

4. On the whole **external** circumference at boom stations BS 96.1 and BS 102.8, visually inspect the tailcone assembly skins for cracks and fasteners for looseness (Figure 2).

   a. If no cracks are found and fasteners are not found loose, go to step 5.

   b. If cracks or loose fasteners are found, submit a Structural Repair request to Product Support Engineering (PSE) at productsupport@bellflight.com for a disposition (General Information Letter GEN-22-154). Once PSE has provided a disposition, go to step 5.

5. Install mid driveshaft cover (450BT) (DMC-505-A-53-50-03-00A-720A-A).

6. Install forward driveshaft cover (450AT) (DMC-505-A-53-50-02-00A-720A-A).

7. Make an entry in the helicopter logbook and historical service records indicating compliance with **PART II** of this Alert Service Bulletin.

8. Repeat recurring inspection of **PART II** of this bulletin **every 50 flight hours** until the airworthiness life limitation of the tailcone assembly is reached.

PART III – General visual inspection of tailcone assembly.

1. Prepare the helicopter for maintenance.

-NOTE-

Identification of the tailcone assembly may be accomplished by verification of the applicable Historical Service Records. If the HSRs are not available, go to step 2, otherwise go to step 3.a.

2. Remove the exhaust fairing (444AT) (DMC-505-A-53-40-05-00A-520A-A).

3. Verify serial number of the installed tailcone assembly (1, Figure 1, View A) marked on the identification plate (2).

   a. If the tailcone assembly (1) serial number identified **is** listed in **Table 1**, go to step 4.

b. If the tailcone assembly (1) serial number identified **is not** listed in **Table 1**, go to step 11.

4. Remove the forward driveshaft cover (450AT) (DMC-505-A-53-50-02-00A-520A-A).

5. Remove the mid driveshaft cover (450BT) (DMC-505-A-53-50-03-00A-520A-A).

6. Remove aft driveshaft cover (450CT) (DMC-505-A-53-50-04-00A-520A-A).

-NOTE-

Removal of the tail rotor driveshaft assemblies and support brackets is not required to perform the inspection in the areas identified (Figure 3).

7. On the whole **external** circumference at boom stations identified (Figure 3), do a general visual inspection of the tailcone assembly fasteners for looseness, damage, or missing fasteners.

   a. If fasteners are all present, there is no noted damage, and no looseness identified, go to step 8.

   b. If fasteners are found loose, missing, or damaged, submit a Structural Repair request to Product Support Engineering (PSE) at productsupport@bellflight.com for a disposition (General Information Letter GEN-22-154). Once PSE has provided a disposition, go to step 8.

8. Install aft driveshaft cover (450CT) (DMC-505-A-53-50-04-00A-720A-A).

9. Install mid driveshaft cover (450BT) (DMC-505-A-53-50-03-00A-720A-A).

10. Install forward driveshaft cover (450AT) (DMC-505-A-53-50-02-00A-720A-A).

11. If removed, install exhaust fairing (444AT) (DMC-505-A-53-40-05-00A-720A-A).

12. Make an entry in the helicopter logbook and historical service records indicating compliance with **PART III** of this Alert Service Bulletin.

13. For tailcone assemblies that are listed in **Table 1**, accomplish **PART III** of this bulletin **every 330 flight hours** until the airworthiness life limitation of the tailcone assembly is reached.

Table 1 – Affected Tailcone Assembly Serial Numbers

SERIAL NUMBERS
All serial numbers with a prefix of “NV” followed by a six-digit number **less than** 115386
NV-901465 through NV-901468
NV-901532 through NV-901552
NV-901561

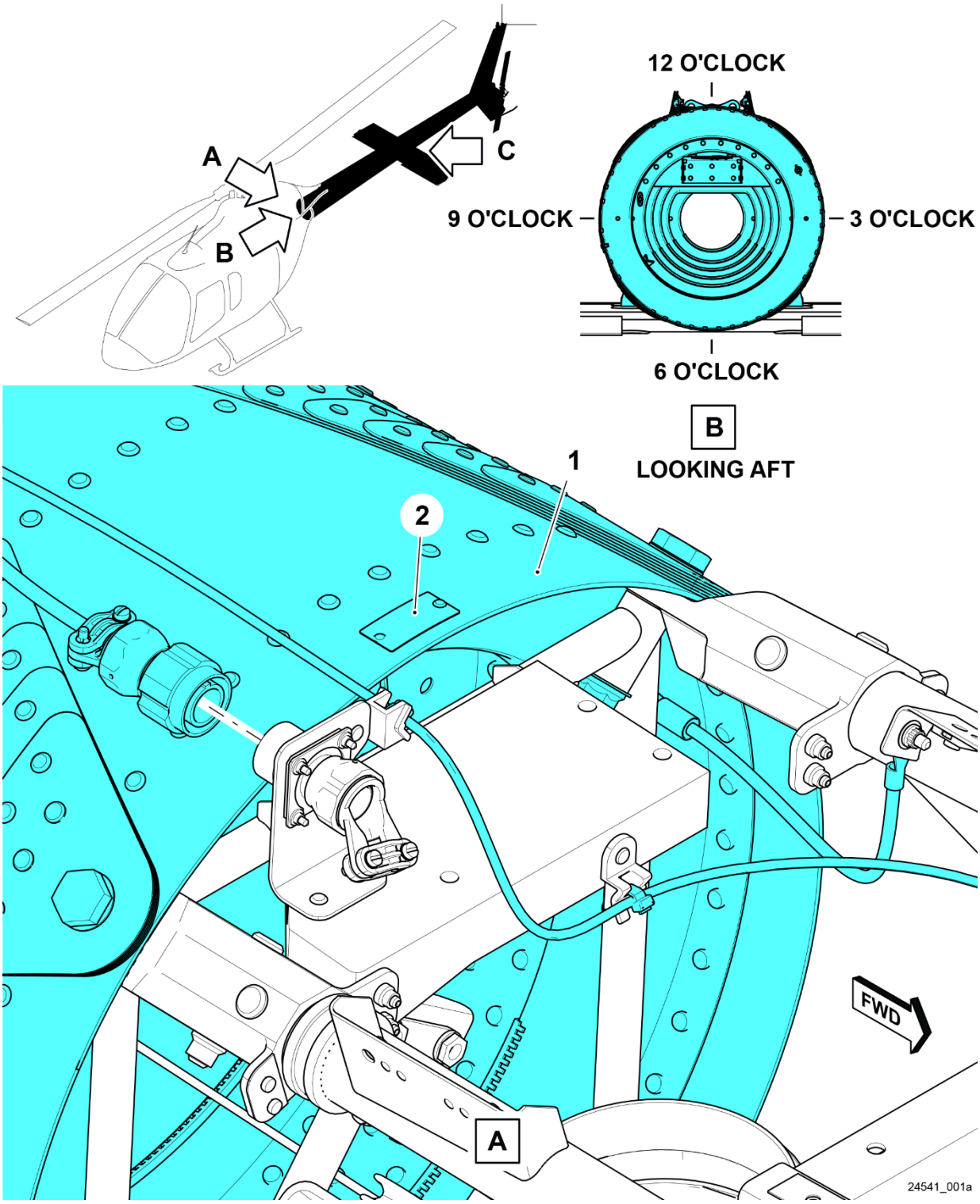

Figure 1 – Location of Tailcone Assembly Identification Plate

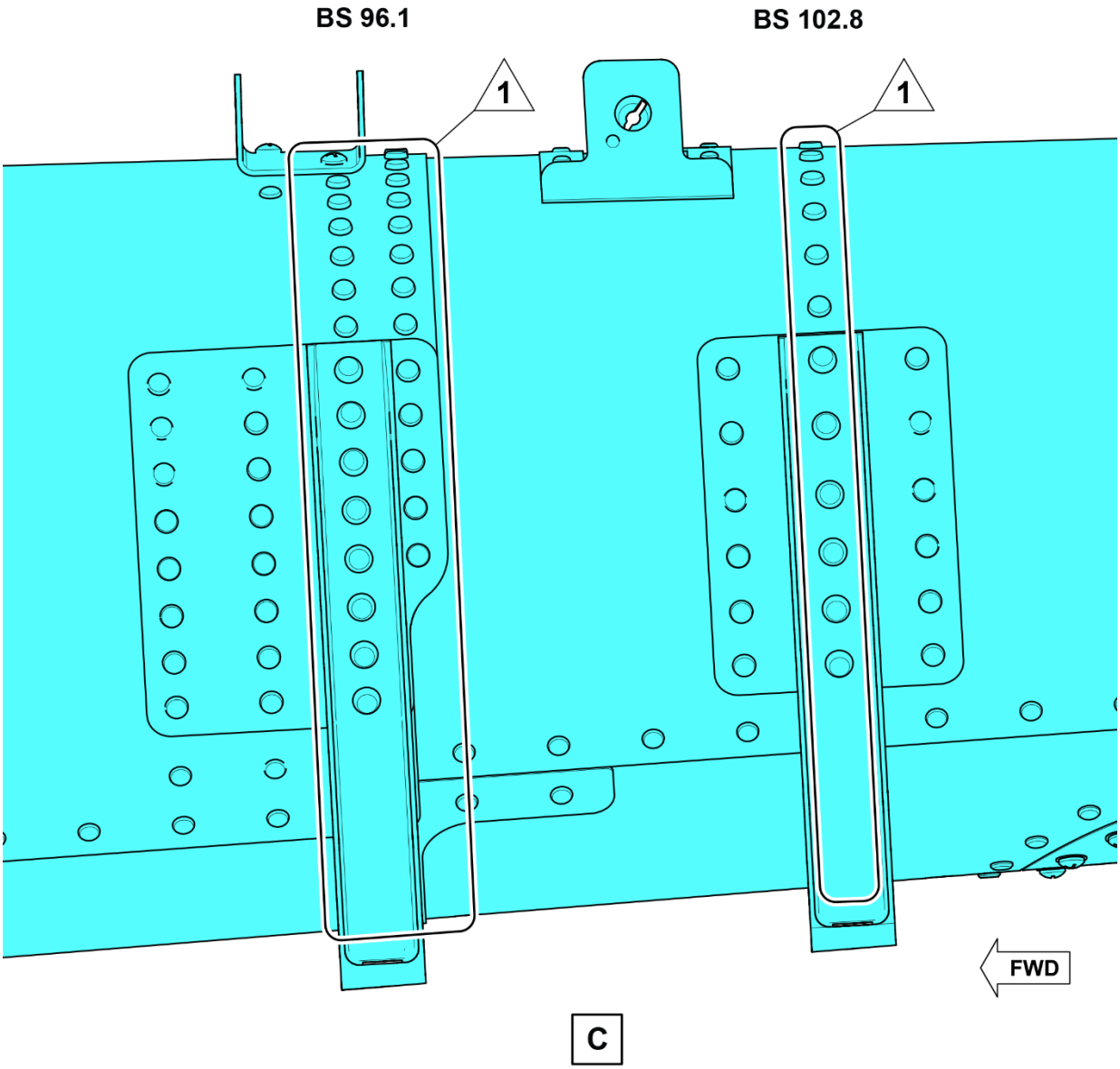

1. Tailcone assembly
2. Identification plate

NOTE

1 **Area to be inspected on each side.**

24541_001b

Figure 2 – Location of Tailcone Assembly Inspection

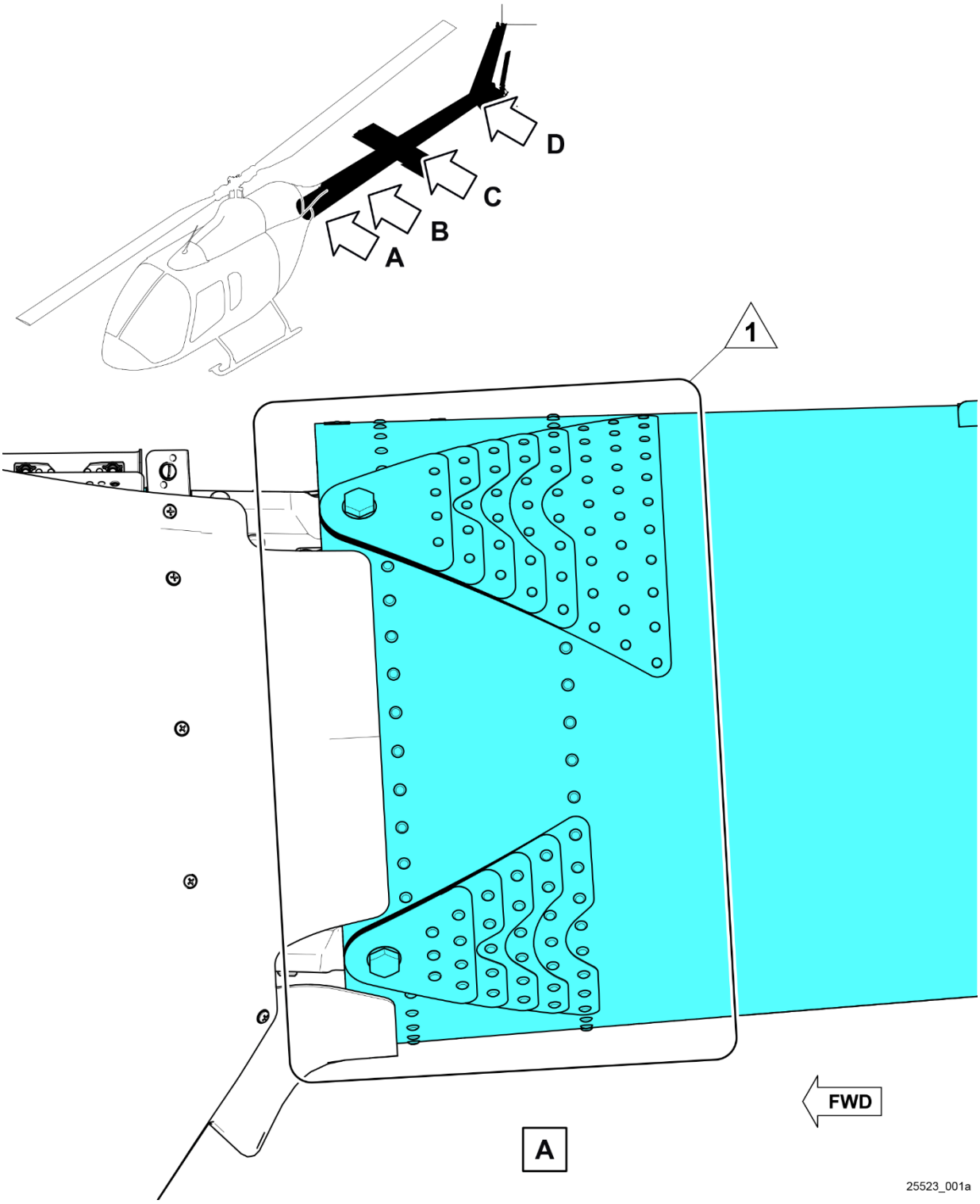

Figure 3 – Locations for Tailcone Assembly Inspections (sheet 1 of 4)

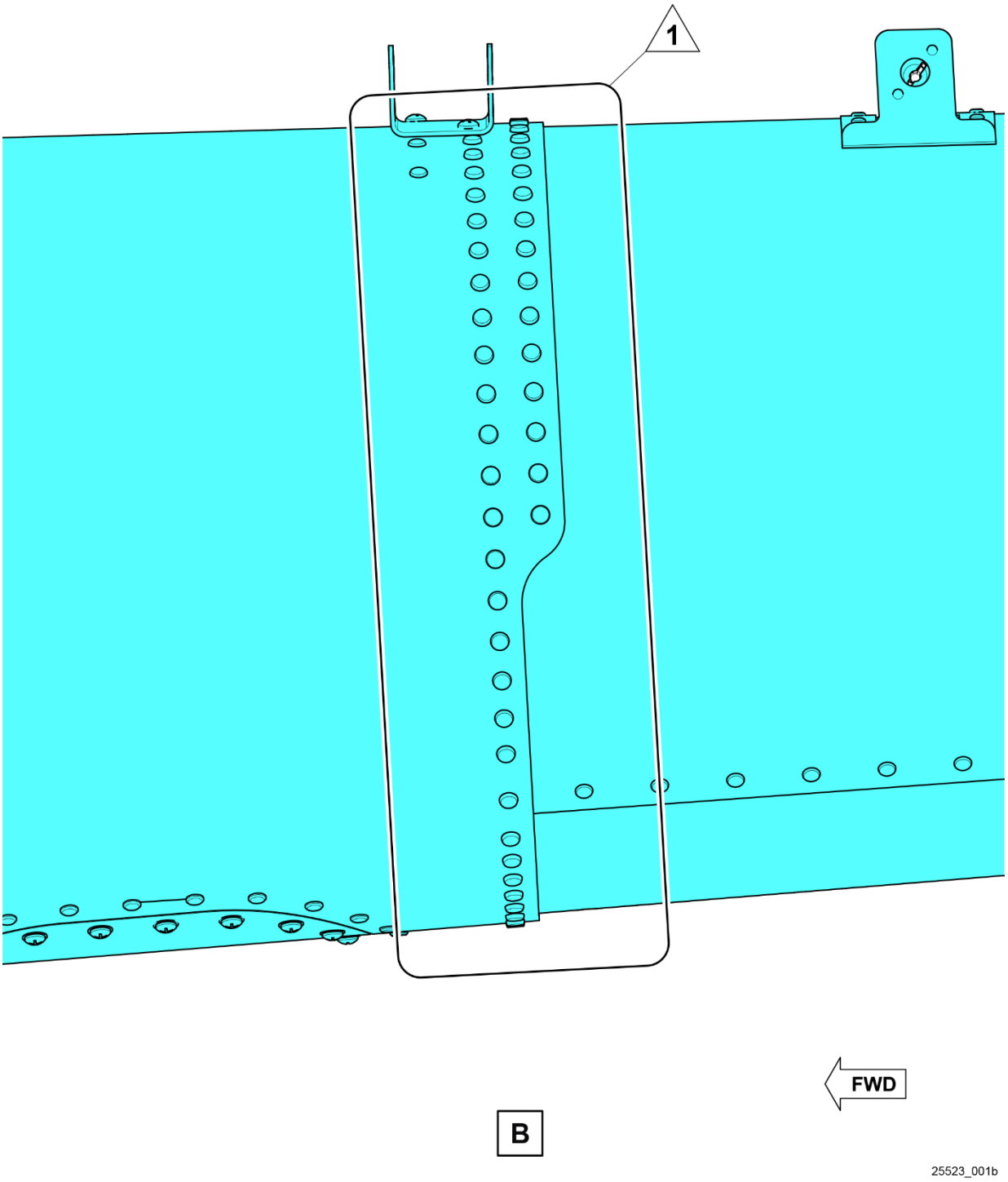

Figure 3 – Locations for Tailcone Assembly Inspections (sheet 2 of 4)

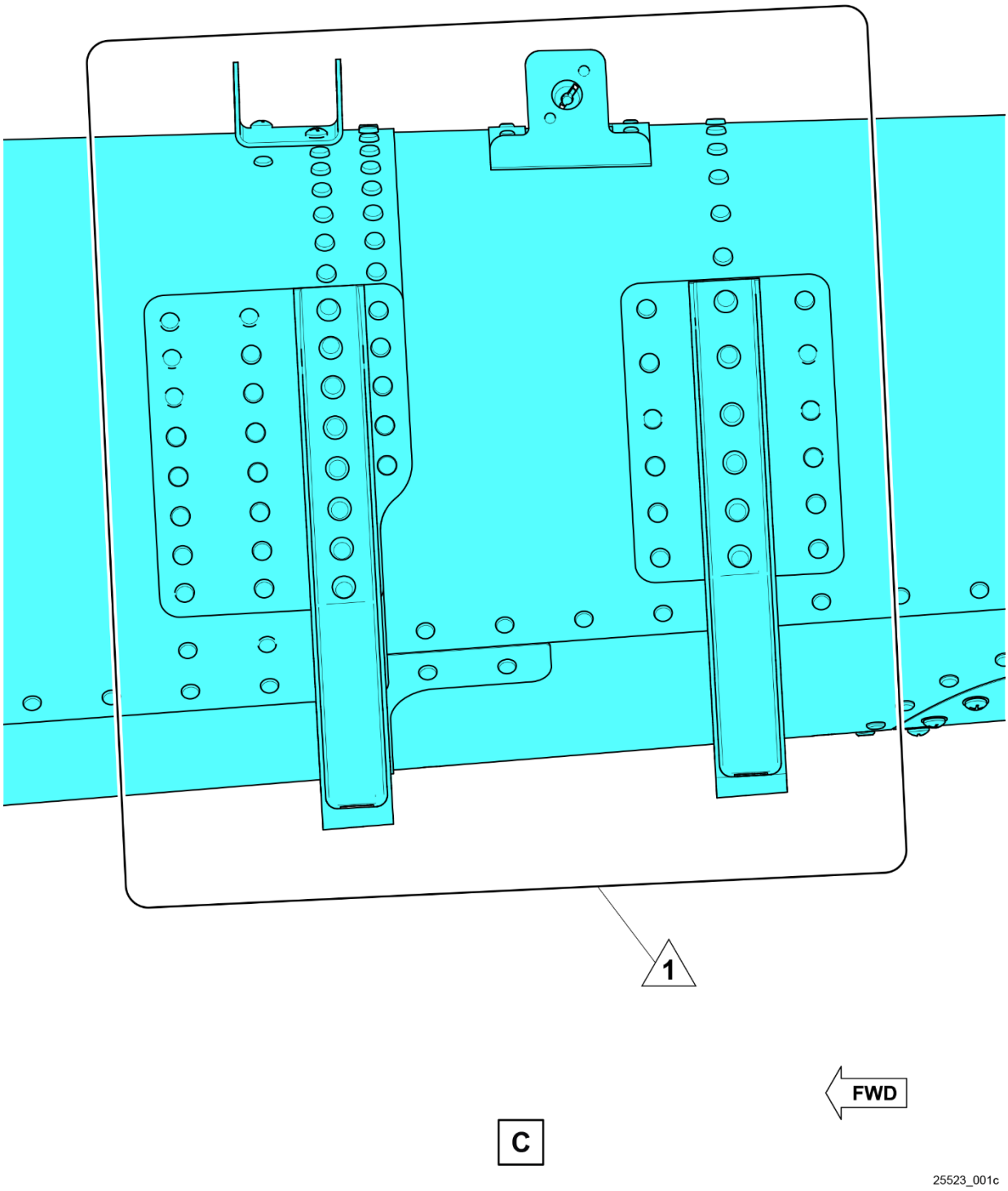

Figure 3 – Locations for Tailcone Assembly Inspections (sheet 3 of 4)

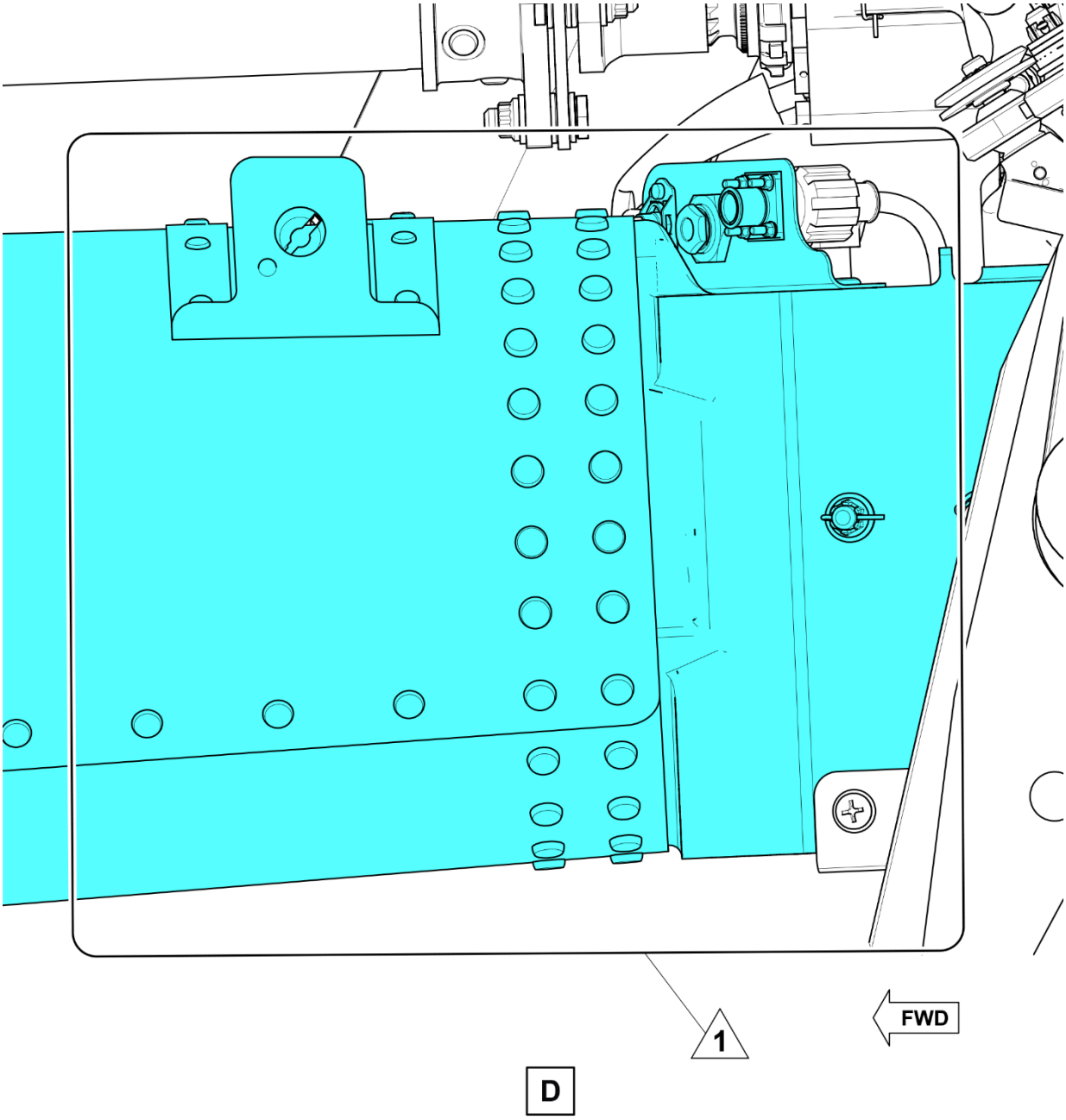

NOTE

1 **Area to be inspected on each side.**

25523_001d

Figure 3 – Locations for Tailcone Assembly Inspections (sheet 4 of 4)