A Textron Company

TECHNICAL BULLETIN 407-25-143

19 August 2025

MODEL AFFECTED: **407**

SUBJECT: **Machined aft fuselage lower tailboom attachment longerons 407-030-014-101 and 407-030-014-102, introduction of**

HELICOPTERS AFFECTED: **Serial numbers 53000 through 53553.**

[Serial number 53554 and subsequent will have the intent of this bulletin accomplished prior to delivery.]

COMPLIANCE: At customer's option or when aft fuselage lower tailboom attachment longeron(s) or lower tailboom attachment fitting(s) require replacement.

DESCRIPTION:

Bell has introduced subject improved machined aft fuselage lower tailboom attachment longerons on the Model 407 S/N 53554 and subsequent. These new longerons are now the active Bell approved spares replacements, replacing the previous fitting/longeron arrangement. Special instructions are needed to splice these in place. They can be retrofitted to any of the helicopters listed in the helicopters affected section of this bulletin.

PART I of this bulletin provides instructions for cutting the aft portion of the existing left longeron/fitting assembly near Sta. 211.62 and splicing the new machined longeron 407-030-014-101 in place while limiting disassembly of the aft fuselage.

PART II of this bulletin provides instructions for cutting the aft portion of the existing right longeron/fitting assembly near Sta. 211.62 and splicing the new machined longeron 407-030-014-102 in place while limiting disassembly of the aft fuselage.

Approved for public release.

APPROVAL:
The engineering design aspects of this bulletin are Transport Canada Civil Aviation (TCCA) approved.

CONTACT INFO:

For any questions regarding this bulletin, please contact:

Bell Helicopter Product Support Engineering
Tel: 1-450-437-2862 / 1-800-363-8023 / productsupport@bellflight.com

MANPOWER:

Approximately 24 man-hours are required to complete **PART I** or **PART II** of this bulletin. This estimate is based on hands-on time and may vary with personnel and facilities available.

WARRANTY:

There is no warranty credit applicable for parts or labor associated with this bulletin.

MATERIAL:

Required Material:

The following material is required for the accomplishment of **PART I** of this bulletin and may be obtained through your Bell Supply Center.

Part Number (Note 1)	Nomenclature	Qty (Note)
407-030-014-101S	Machined longeron LHS	1
206-032-319-169A	Splice angle	1
100-048-5-3	Hi-Lok pin	8 (3)
100-048-5-4	Hi-Lok pin	8 (3)
100-048-5-5	Hi-Lok pin	8 (3)
100-145-6-5	Hi-Lok pin	3 (3)
100-145-6-6	Hi-Lok pin	2 (3)
30-015-5	Collar	8
30-277-6	Collar	5
NAS1149E0316R	Washer	5
120-098-10A41	Peelable shim	1
NAS9307M-5-04	Rivet	9 (4)
NAS9307M-5-05	Rivet	9 (4)
MS20615-4MP4	Rivet	8 (4)
MS20615-4MP5	Rivet	8 (4)
MS20615-4MP6	Rivet	8 (4)
NAS9307M-4	Rivet	8 (4)

206-032-309-225S	Stiffener	1 (2)
206-032-309-227S	Stiffener	1 (2)
N/A	Aluminum, 2024-T3, 0.080 inch (2.03 mm) thick. 0.750 inch (19.0 mm)	A/R (5)
NAS626-26	Bolt	2 (6)
NAS627-30	Bolt	2 (6)
42FLW-624	Nut	2 (6)
42FLW-720	Nut	2 (6)
140-007-29S25E6	Countersunk Washer	2 (6, 7)
140-007-25S22E6	Countersunk Washer	2 (6, 7)
NAS1149G0732P	Flat Washer	9 (6, 7, 8)
NAS1149G0663P	Flat Washer	10 (6, 7, 9)

The following material is required for the accomplishment of **PART II** of this bulletin and may be obtained through your Bell Helicopter Textron Supply Center.

Part Number (Note 1)	**Nomenclature**	**Qty (Note)**
407-030-014-102S	Machined longeron RHS	1
206-032-319-170A	Splice angle	1
100-048-5-3	Hi-Lok pin	8 (3)
100-048-5-4	Hi-Lok pin	8 (3)
100-048-5-5	Hi-Lok pin	8 (3)
100-048-6-4	Hi-Lok pin	3 (3)
100-048-6-5	Hi-Lok pin	1 (3)
100-145-6-5	Hi-Lok pin	1 (3)
30-015-5	Collar	8
30-015-6	Collar	4
30-277-6	Collar	1
NAS1149E0332R	Washer	1
NAS1149D0316J	Washer	4
120-098-10A41	Peelable shim	1
NAS9307M-5-04	Rivet	9 (4)
NAS9307M-5-05	Rivet	9 (4)
MS20615-4MP4	Rivet	8 (4)
MS20615-4MP5	Rivet	8 (4)
MS20615-4MP6	Rivet	8 (4)
NAS9307M-4	Rivet	8 (4)
206-032-309-225S	Stiffener	1 (2)
206-032-309-227S	Stiffener	1 (2)
N/A	Aluminum, 2024-T3, 0.080 inch (2.03 mm) thick. 0.750 inch (19.0 mm) (Note 5)	A/R (5)
NAS626-26	Bolt	2 (6)
NAS627-30	Bolt	2 (6)
42FLW-624	Nut	2 (6)

42FLW-720	Nut	2 (6)
140-007-29S25E6	Countersunk Washer	2 (6, 7)
140-007-25S22E6	Countersunk Washer	2 (6, 7)
NAS1149G0732P	Flat Washer	9 (6, 7 ,8)
NAS1149G0663P	Flat Washer	10 (6, 7, 9)

NOTES:

1. The lists of part numbers do not include the replacement rivets for those removed to gain access to the rework area. Due to the different helicopter configurations and possible kits or STC's involved, Bell suggests recording type, size and location of fasteners which may need removal prior to starting replacement of the lower longerons on your helicopter.
2. Stiffeners are recommended when both left and right sides are to be modified simultaneously on the same helicopter. If only one longeron is modified, the Stiffeners are not required.
3. During installation of the new longeron(s), use the appropriate grip length from the Hi-Lok fasteners listed, to fit the affected locations.
4. During installation of the new longeron(s), use the appropriate grip length from the rivets listed, to fit the affected locations.
5. A quantity of four strips approximately 0.750 inch (19.0 mm) wide by 6 inches (15.2 cm) long will be needed to fabricate taper shims if stiffeners 206-032-309-225S and 206-032-309-227S are not ordered.
6. The tailboom attachment hardware must be replaced every time the tailboom is removed from the aircraft.
7. Existing washers may be reused provided they are not damaged.
8. Quantity indicated is the maximum allowable. A maximum quantity of four (4) flat washers can be used in the upper left position. A maximum quantity of five (5) flat washers can be used in the upper right position
9. Quantity indicated is the maximum allowable. A maximum quantity of five (5) flat washers can be used in the lower left and right positions.

Consumable Material:
The following material is required to accomplish this bulletin, but may not require ordering, depending on the operator's consumable material stock levels. This material may be obtained through your Bell Supply Center.

Part Number	Nomenclature	Qty	Reference *
2010-12481-01	Sealant	1 PT (1)	C-251
2230-00425-00	Epoxy Primer	1 PT (1)	C-204
2100-00345-00	Chemical Film	1 QT (1)	C-100
2110-00010-00	Aliphatic Naphta	1 GAL (1, 2)	C-305
2400-00184-00	Technical Grade Petrolatum	13 OZ (1)	C-008

* C-XXX numbers refer to the consumables list in BHT-ALL-SPM Standard Practices Manual

NOTES:

1. Quantity indicated is the format that the product is delivered in. Actual quantity required to accomplish the instructions in this bulletin may be less than what has been delivered.
2. Isopropyl Alcohol (C-385) can be used as a substitute.

SPECIAL TOOLS:

Tailboom attachment drill plate (Figure 1).
Appropriate drill bushings, reamers, spot face cutter and drill bits.

WEIGHT AND BALANCE:

Not affected

ELECTRICAL LOAD DATA:

Not affected.

REFERENCES:

407-IPB Illustrated Parts Breakdown, Chapter 53
407-MM Maintenance Manual, Chapters 53, 65, 71
BHT-ALL-SPM Standard Practice Manual, Chapters 2, 3, 4, 5
BHT-ALL-SRM Structural Repair Manual, Chapter 3
Technical Bulletin 407-07-78

PUBLICATIONS AFFECTED:

BHT-407-IPB Illustrated Parts Breakdown

ACCOMPLISHMENT INSTRUCTIONS:

PREPARATION:

-NOTE-

PART I and **PART II** provide instructions to replace aft section of existing longeron assembly, between Station 211.62 to Station 231.35.

To prevent disparity, it is recommended that both improved longerons be installed on the same helicopter. However, replacement one at a time is acceptable.

If both longerons are replaced at the same time, the fuselage must be installed in a Bell-Approved fixture holding valid and current Bell certification.

1. If required, locally manufacture a drill plate to dimensions shown (Figure 1).

2. If an existing tailboom attachment drill plate is to be used, confirm the condition of the tailboom attachment drill plate prior to the next step (Figure 1).

   a. Verify the flatness requirement is respected.

   b. Verify the dimensional and positional requirements of the tailboom attachment holes (qty 4) are respected.

3. If not already performed, remove the tailboom assembly from the aft fuselage section and install on a suitable support (DMC-407-A-53-01-00-00A-520A-A).

4. Protect or remove any electrical, electronic, air conditioning and heating equipment that may be mounted on the canted web inside the aft fuselage area.

5. Remove bulkhead panel (4, Figure 3) in the baggage compartment.

6. Stabilize the fuselage assembly with jacks. With the help of a hoist, support weight or remove the engine completely from the airframe.

-NOTE-

Four spacers (7, Figure 2) of equivalent thickness (within 0.001 inch (0.025 mm)) are required between each tailboom attachment fitting (2, 3, 4, and 5) and the tailboom attachment drill plate (8) to prevent interference with the aft fuselage panels.

7. Verify that the fuselage to tailboom attachment bolt pattern matches with the tailboom attachment drill plate. The bolt at each position should move freely without any binding or interference while the 3 others are still installed in the adjacent longeron assemblies.

-NOTE-

Maximum diameter allowed in service on upper longeron bolt hole is 0.453 inch (11.506 mm). Maximum diameter allowed in service on lower longeron bolt hole is 0.391 inch (9.931 mm).

   a. If bolt hole pattern matches the drill plate and each hole does not exceed maximum diameter, proceed to step 8.

   b. If any bolt hole does not match, contact Product Support Engineering for assistance.

8. Remove the tailboom attachment drill plate.

9. Remove the aft fuselage bulkhead (9, Figure 4) from the aft end of the fuselage (STA 231.35). Inspect bulkhead (9) for damage and condition. If existing bulkhead (9) is serviceable, retain for re-installation. If replacement is necessary, order and perform new improved machined bulkhead installation in accordance with TB 407-07-78.

-NOTE-

If the drill plate moves (wobbles) in any direction by applying light hand pressure at each corner, it is an indication that the longeron fittings might be out of plane.

10. Verify that the four longeron/fittings are in plane within 0.002 inch (0.050 mm).

CAUTION

The tailboom attachment drill plate can be deformed if more than tare torque is applied to the tailboom attachment hardware. This condition can alter the in-plane gap measurements.

-NOTE-

Four spacers (7, Figure 2) of equivalent thickness (within 0.001 inch (0.025 mm)) are required between each tailboom attachment fitting (2, 3, 4, and 5) and the tailboom attachment drill plate (8) to prevent interference with the aft fuselage panels.

a. Position the tailboom attachment drill plate and spacers (7, Figure 2) against all four longerons/fittings and insert the tailboom attachment bolts with washers through each fitting. Install washers and nuts. Thread the nuts until they are just seated against the fitting.

b. Verify that all longerons/fittings are in plane with each other within 0.002 inch (0.050 mm) using the drill plate as a reference. The measured gaps between the drill plate and the longerons/fittings shall be constant on the entire longeron/fitting aft face. Record values for subsequent verification. If a difference exceeding 0.002 inch (0.050 mm) is observed between any recorded gap value, contact Product Support Engineering for further instructions.

c. If all four fittings are in-plane within 0.002 inch (0.050 mm), perform the following:

(1) Secure the tailboom attachment drill plate to the two upper tailboom attachment fittings and one of the lower fittings opposite of the side that will be modified.

(2) Torque attachment hardware to 50-70 inch-pounds (5.65-7.91 N-m) plus measured tare torque.

d. If one longeron/fitting is not in plane, the affected longeron/fitting must be replaced using the tailboom attachment drill plate prior to installing the new lower longeron/fitting.

e. If more than one longerons/fittings are not in plane, contact Product Support Engineering for assistance.

11. Accomplish **PART I** or **PART II** as required.

PART I: Splicing new longeron on left side (STA 211.62) with existing part on airframe.

1. Record size, type, and location before drilling rivets securing the aft fuselage fairing (3, Figure 3) to the aft fuselage structure.

   a. Remove the fairing (3) to get additional access to the aft section of the aft fuselage lower attachment longeron assembly (4, Figure 4).

2. Record type, size, and location before drilling the fasteners securing the lateral stiffeners (1) and (3). Remove and retain stiffeners.

3. On the left side of the aft fuselage, mark the outer surfaces of the side and lower flanges of the existing longeron (4) indicating the orientation and location of the cutline (Figure 4, DETAIL C):

   a. Exact location of longeron cutline depends on actual location of existing rivets. Make sure that a minimum of 0.32 inch (8.1 mm) edge distance will exist at each existing fastener location adjacent to the future cutline.

   b. Mark the correct location using a felt pen marker.

   c. Edge distance less than 0.32 inch (8.1 mm) is not acceptable.

4. Once the location of the cutline is established, on lower flange of the longeron (4) remove 4 fasteners forward and 4 fasteners aft of the cutline marked in Step 3.

5. On side flange of the longeron (4) remove 4 fasteners forward and 5 fasteners aft of the cutline marked in Step 3.

6. Insert between the canted web (12), LHS aft fuselage panel (13) and the longeron (4), a thin sheet made from CRES or TITANIUM material to protect the parts while cutting the existing longeron (4). Tape may be used to secure the CRES or TITANIUM sheet work aid in place.

CAUTION

Use extreme caution to not damage the aft fuselage panel (13) or canted web (12) during cutting operation.

7. Refer to the cutline marked at Step 3 and cut existing longeron (4) (Figure 4, DETAIL C). Cut must maintain 0.32 inch (8.1 mm) minimum edge distance with each fastener location adjacent to the new cutline in existing longeron (4).

-NOTE-

Original tailboom attachment fitting and longeron, as delivered from the factory, are hot bonded together and must be removed from the fuselage as an assembly.

8. Record type, size, and location before drilling remaining fasteners keeping the aft section of longeron (4) attached to the aft fuselage:

   a. Remove aft section of the cut longeron (4) from the aft fuselage structure.

   b. Finish cutting/trimming existing longeron as needed to get the radius shape (Figure 4, DETAIL C).

   c. Break all sharp edges at cutline on longeron (4) which remains attached to the aft fuselage.

9. Inspect the exposed area of the longeron (4) remaining on the fuselage, existing frames/bulkheads, and the canted web (12) for corrosion and condition:

   a. If any damage exists, repair using BHT-ALL-SRM and/or BHT-ALL-SPM or contact Product Support Engineering for assistance.

   b. Apply chemical film (C-100) to bare metal surfaces of the reworked part.

   c. Prime all bare metal surfaces using primer (C-204) and allow to dry.

-NOTE-

The aft face or the replacement longeron (6) must be in-plane with the three other fittings within 0.002 inch (0.050 mm).

10. Fit the new longeron (6) in position over the canted web (12) (aft of bulkhead at Sta. 217.84) and under the canted web (forward of bulkhead at Sta. 217.84) and against the existing frames/bulkheads:

    a. Secure the aft end of the new longeron to the forward face (unused location) of the tailboom attachment drill plate using drill bushing (12), bolt (11), washers (10), spacer (7) and nut (13) (Figure 2, VIEW A). Tighten nut to 50 inch-pounds.

    b. Make sure the longeron is tight against the outboard flange of the bulkhead at Station 217.84 and that the radius of the bulkhead and the longeron (6, Figure 4) match without any gaps.

    c. Nest the forward end of the new longeron (6) against the inner face of the existing longeron (4) still in the fuselage and clamp in place.

11. When totally secured to the airframe, mark the cutline (Figure 4, DETAIL C) on the new longeron (6) using a felt pen.

12. Remove the new longeron (6) and cut following the mark made in Step 11 above.

-NOTE-

Due to different thicknesses of longerons (4 and 6), a step between their individual lower surfaces is acceptable.

13. Re-install the longeron (6) back on the fuselage as defined in Step 10. Before clamping in place, make sure both horizontal flanges inner surfaces and both vertical flanges outer surfaces of each longeron (4 and 6) are in the same plane to match the lower surface of canted web (12) and the aft fuselage panel assembly (13) respectively:

    a. Clamp the longeron (6) in place and verify that no gaps are present between the canted web (12) and horizontal flange of each longeron (4 and 6) after clamping.

14. With the new longeron (6) temporarily secured in place, verify that a gap of 0.060 to 0.090 inch (1.52 to 2.28 mm) exists between the edges of the existing longeron (4) and the new one (6) (Figure 4, DETAIL C). If the gap is too small, repeat Step 10 through Step 14 as required until proper gap is obtained.

15. Use a felt pen and mark from the canted web (12), each fastener hole location onto the lower flange of the new longeron (6).

16. Reinstall the aft fuselage fairing (3, Figure 3) with clecos.

17. Mark each fastener hole location from the aft fuselage panel (13, Figure 4)) and aft fuselage fairing (3, Figure 3) onto the vertical flange of the new longeron (6, Figure 4).

18. Remove aft fuselage fairing (3, Figure 3). Remove the new longeron (6, Figure 4) and verify that the new holes needed in each flange of the new longeron (6) will not interfere with any longeron reinforcement web or machined radius. Make sure that proper edge distance is maintained with all new fastener holes.

-NOTE-

Make sure the in-plane relationship between each longeron (4 and 6) is maintained during the following steps.

19. Re-install the longeron (6) on the airframe as per Step 10. Drill and transfer existing fasteners hole pattern from canted web (12) into lower flange of replacement longeron (6) and install clecos as you progress.

20. Install the aft fuselage fairing (3, Figure 3) with clecos.

    a. Transfer existing fasteners holes from the aft fuselage panel (13, Figure 4) and aft fuselage fairing (3, Figure 3) into the vertical flange of the new machined longeron (6, Figure 4).

-NOTE-

Removal of clecos will be required for the following steps. Make sure the in-plane relationship between the longerons (4 and 6) is maintained at all times.

21. Position the splice angle (5) against the upper surface of the canted web (12) and against the inner face of each vertical flange of the longerons (4 and 6, Figure 4, SECTION D-D).

22. Use a felt pen and mark each hole that will be drilled in the splice angle (5):

    a. Remove the splice angle (5) and verify that enough edge distance exists at all the required fastener locations. Pay particular attention to the most aft fastener location on the vertical flange of the splice angle (5).

    b. If the most aft hole on the vertical flange indicates a low edge distance condition (less than 1.5D), cut the aft section of the splice angle (5) as shown in Figure 4, Sheet 1, and View E-E to clear the most aft fastener.

23. Re-install the splice angle (5) and transfer existing airframe fastener hole pattern into lower flange of the splice angle (5) and install clecos.

-NOTE-

Replacement stiffeners (1A and 3A), which are currently available from spares do have joggled flanges at each extremity which will match the additional thickness of the new splice angle (5). Therefore, they will not require the use of tapered shims (7). Omit step 24 when stiffeners (1A and 3A) are being used.

24. If the original stiffeners (1 and 3) are being re-used and do not have a joggled flange at each end, accomplish the following:

    a. Fabricate tapered shims (7) to pick the removed fasteners from stiffeners (1 and 3). Shims shall have a constant taper from 0.080 inch (stock) (2.03 mm) down to 0.010 inch (0.25mm). Make sure proper edge distance of 2D minimum exists at inboard tip of each shim (7).

    b. Locate tapered shims (7) in position between canted web (12) and existing stiffeners (1 and 3).

    c. Transfer existing airframe fastener hole pattern into each tapered shim (7).

-NOTE-

Deburr not to exceed 0.005 inch depth

25. Remove all repair parts; deburr all holes and edges; remove debris and loose material.

-NOTE-

Do not soak parts to be bonded with cleaner. Use of a moistened rag is recommended.

26. Remove paint from vertical flange and radius of existing LHS longeron (4) and replacement LHS longeron (6) common only to splice angle (5) and clean for bonding (Figure 4, SECTION D-D). Do not remove primer from faying surfaces.

-NOTE-

Do not apply excessive amount of sealant on faying surfaces. Maintain a thin and uniform layer.

27. Apply sealant (C-251) to faying surfaces. Locate replacement LHS longeron (6) in position as per Step 10.

-NOTE-

Do not install fasteners common to LHS splice (5) angle at this time. Use clecos coated with petrolatum (C-008) instead.

Install all rivets and pins wet with sealant (C-251) while faying surface sealant is still wet.

28. Secure replacement LHS longeron (6) using previously recorded fasteners.

29. Locate and secure the aft upper fairing (3, Figure 3) using previously recorded fasteners and new fasteners shown in Figure 4, Sheet 1 and Figure 4, View F-F.

30. Remove excess sealant squeeze-out.

31. Allow to cure at room temperature for 24 hours.

32. Locate LHS splice angle (5, Figure 4), tapered shims (7) and stiffeners (1 and 3) with clecos using holes common to the web.

33. Measure gap between vertical flange of existing LHS longeron (4), replacement LHS longeron (6) and vertical flange of LHS splice angle (5). If gap is greater than 0.030 inch (0.76 mm), contact Product Support Engineering with additional information describing the extent of the gap. If the gap is less than 0.030 inch (0.76 mm) proceed as follows:

    a. Use shim (10) and peel as required in order to match gap measured between the vertical flange of splice angle (5) and either flange of LHS longerons (4 and 6) within 0.003 inch (0.076 mm).

34. Locate peelable shim (10) into position between external flange of splice angle (5) and inner face of LHS longeron (4 and 6) and maintain shim in position.

35. Transfer holes from vertical flange of LHS longeron (4 and 6) into shim (10).

36. Increase size of holes (Qty. 8) in LHS longeron (4 and 6), splice angle (5), tapered shims (7) and stiffeners (1 and 3). Final ream to proper diameter (0.1635 to 0.1655 inch) for installation of Hi-Lok fasteners.

37. Remove LHS splice angle (5), tapered shims (7), stiffeners (1 and 3) and peelable shim (10). Deburr all holes.

-NOTE-

Do not apply excessive amount of sealant on faying surfaces. Maintain a thin and uniform layer. Ensure gap in fillet radius between splice angle and longerons is filled with sealant (Figure 4, Section D-D).

38. Apply sealant (C-251) to faying surfaces (Figure 4, SECTION D-D). Locate LHS splice angle (5), tapered shims (7), stiffeners (1 and 3) and peelable shim (10) in position.

-NOTE-

Install all fasteners wet with sealant (C-251) while faying surface sealant is still wet.

Do not apply or allow sealant on threads of pins.

39. Secure splice angle (5), tapered shims (7), stiffeners (1 and 3) and peelable shims (10) using fasteners shown in Figure 4 and previously recorded fasteners, grip length to suit.

40. Remove excess sealant squeeze-out.

41. Allow to cure at room temperature for 24 hours.

42. Prime all bare metal surfaces using primer (C-204). Allow to dry.

43. Seal all edges of modification area using sealant (C-251). Allow to dry.

44. With the tailboom drill plate installed to the three undisturbed tailboom attachment fittings. Using a drill bushing, drill a 0.250 inch (6.35 mm) diameter hole in the aft face of the new longeron (6):

    a. Increase in steps the diameter of the hole and ream to a final dimension of 0.376 to 0.378 inch (9.55 to 9.60 mm) diameter.

    b. Spot face the forward face of the new hole in the new longeron (6) to 0.750 inch (19.05 mm) diameter with a 0.030 inch (0.76 mm) radius and a maximum depth of 0.010 inch (0.25 mm).

45. Remove tailboom drill plate and aft fuselage bulkhead (9). Clean residual cutting fluids and deburr hole.

-NOTE-

If the drill plate moves (wobble) in any direction by applying light hand pressure at each corner, it is an indication that the longeron fittings might be out of plane.

46. Verify that the four longeron/fittings are in plane within 0.002 inch (0.050 mm).

CAUTION

The tailboom attachment drill plate can be deformed if more than tare torque is applied to the tailboom attachment hardware. This condition can alter the in-plane gap measurements.

-NOTE-

Four spacers of equivalent thickness (within 0.001 inch (0.025 mm)) are required between each tailboom attachment fitting and the drill plate to prevent interference with the aft fuselage panels.

a. Position the tailboom attachment drill plate and spacers (7, Figure 2) against all four longerons/fittings and insert the tailboom attachment bolts with washers through each fitting. Install washers and nuts. Thread the nuts until they are just seated against the fitting.

b. Verify that all longerons/fittings are in plane with each other within 0.002 inch (0.050 mm) using the drill plate as a reference. The measured gaps between the drill plate and the longerons/fittings shall be constant on the entire longeron/fitting aft face. If a difference exceeding 0.002 inch (0.050 mm) is observed between any recorded gap values, please contact Product Support Engineering for further instructions.

47. Apply chemical film (C-100) to spot face and hole surface of inner diameter.

48. Prime all bare metal surfaces using primer (C-204). Allow to dry.

49. If you also modify the opposite side of the fuselage, accomplish **PART II** at this time.

50. Refer to procedure found in TB 407-07-78 to re-install the aft fuselage bulkhead (9).

a. If existing aft fuselage bulkhead (9) 206-032-308-103 or 206-032-308-121 is re-installed, secure using existing fasteners and new fasteners shown in Figure 4, View F-F.

b. If existing or new aft fuselage bulkhead (9) 407-030-027-101 or 407-030-027-107 is installed, secure using fasteners specified in TB 407-07-78 and new fasteners shown in Figure 4, View F-F.

51. Cap seal fastener tails with sealant (C-251) (Figure 4, View F-F).

52. Remove all protective covers previously installed on equipment located on canted web.

53. Reassemble aircraft by installing all items that were previously removed in PREPARATION steps 2, 3, 4 and 5 (407-MM, Chapter 53, 65, 71).

54. Annotate helicopter technical records to indicate compliance with **PART I** of this Technical Bulletin.

PART II: Splicing new longeron on right side (STA 211.62) with existing part on airframe.

1. Record size, type, and location before drilling rivets securing the aft fuselage fairing (3, Figure 3) to the aft fuselage structure:

   a. Remove the fairing (3) to get additional access to the aft section of the aft fuselage lower attachment longeron assembly (4, Figure 5).

2. Record type, size, and location before drilling the fasteners securing the lateral stiffeners (1) and (3). Remove and retain stiffeners.

3. On the right side of the aft fuselage, mark the outer surfaces of the side and lower flanges of the existing longeron (4) indicating the orientation and location of the cutline (Figure 5, DETAIL G):

   a. Exact location of longeron cutline depends on actual location of existing rivets. Make sure that a minimum of 0.32 inch (8.1 mm) edge distance will exist at each existing fastener location adjacent to the future cutline.

   b. Mark the correct location using a felt pen marker.

   c. Edge distance less than 0.32 inch (8.1 mm) is not acceptable.

4. Once the location of the cutline is established, on lower flange of the longeron (4), remove four fasteners forward and a quantity of four fasteners aft of the cutline marked in Step 3.

5. On side flange of the longeron (4) remove four fasteners forward and five fasteners aft of the cutline marked in Step 3.

6. Insert between the canted web (12), RHS aft fuselage panel (13) and the longeron (4), a thin sheet made from CRES or TITANIUM material to protect the parts while cutting the existing longeron (4). Tape may be used to secure the CRES or TITANIUM sheet work aid in place.

CAUTION

Use extreme caution to not damage the aft fuselage panel (13) or canted web (12) during cutting operation.

7. Refer to the cutline marked at Step 3 and cut existing longeron (4) (Figure 5, DETAIL G). Cut must maintain 0.32 inch (8.1 mm) minimum edge distance with each fastener location adjacent to the new cutline in existing longeron (4).

-NOTE-

Original tailboom attachment fitting and longeron, as delivered from the factory, are hot bonded together and must be removed from the fuselage as an assembly.

8. Record type, size, and location before drilling remaining fasteners keeping the aft section of longeron (4) attached to the aft fuselage:

   a. Remove aft section of the cut longeron (4) from the aft fuselage structure.

   b. Finish cutting/trimming existing longeron as needed to get the radius shape (Figure 5, DETAIL G).

   c. Break all sharp edges at cutline on longeron (4) which remains attached to the aft fuselage.

9. Inspect the exposed area of the longeron (4) remaining on the fuselage, existing frames/bulkheads, and the canted web (12) for corrosion and condition:

   a. If any damage exists, repair using BHT-ALL-SRM and/or BHT-ALL-SPM or contact Product Support Engineering for assistance.

   b. Apply chemical film (C-100) to bare metal surfaces of the reworked part.

   c. Prime all bare metal surfaces using primer (C-204) and allow to dry.

-NOTE-

The aft face or the replacement longeron (6) must be in-plane with the three other fittings within 0.002 inch (0.050 mm).

10. Fit the new longeron (6) in position over the canted web (12) (aft of bulkhead at Sta. 217.84) and under the canted web (forward of bulkhead at Sta. 217.84) and against the existing frames/bulkheads:

    a. Secure the aft end of the new longeron to the forward face (unused location) of the tailboom attachment drill plate using drill bushing (12), bolt (11), washers (10), spacer (7) and nut (13). (Figure 2, View A). Tighten nut to 50 inch-pounds

    b. Make sure the longeron is tight against the outboard flange of the bulkhead at Station 217.84 and that the radius of the bulkhead and the longeron (6, Figure 5) match without any gaps.

c. Nest the forward end of the new longeron (6) against the inner faces of the existing longeron (4) still in the fuselage and clamp in place.

11. When totally secured to the airframe, mark the cutline on the new longeron (6) (Figure 5, DETAIL G) using a felt pen.

12. Remove the new longeron (6) and cut following the mark made in Step 11 above.

-NOTE-

Due to different thicknesses of longerons (4 and 6), a step between their individual lower surfaces is acceptable.

13. Re-install the longeron (6) back on the fuselage as defined in Step 10. Before clamping in place, make sure both horizontal flanges inner surfaces and both vertical flanges outer surfaces of each longeron (4 and 6) are in the same plane to match the lower surface of canted web (12) and the aft fuselage panel assembly (13) respectively:

    a. Clamp the longeron (6) in place and verify that no gaps are present between the canted web (12) and horizontal flange of each longeron (4 and 6) after clamping.

14. With the new longeron (6) temporarily secured in place, verify that a gap of 0.060 to 0.090 inch (1.52 to 2.28 mm) exists between the edges of the existing longeron (4) and the new one (6) (Figure 5, DETAIL G). If the gap is too small, repeat Step 10 through Step 14 as required until proper gap is obtained

15. Use a felt pen and mark from the canted web (12), each fastener hole location onto the lower flange of the new longeron (6).

16. Reinstall the aft fuselage fairing (3, Figure 3) with clecos.

17. Mark each fastener hole location from the aft fuselage panel (13, Figure 5) and aft fuselage fairing (3, Figure 3) onto the vertical flange of the new longeron (6, Figure 5).

18. Remove aft fuselage fairing (3, Figure 3). Remove the new longeron (6, Figure 5) and verify that the new holes needed in each flange of the new longeron (6) will not interfere with any longeron reinforcement web or machined radius. Make sure that proper edge distance is maintained with all new fastener holes.

-NOTE-

Make sure the in-plane relationship between each longeron (4 and 6) is maintained during the following steps.

19. Re-install the longeron (6) on the airframe as per Step 10. Drill and transfer existing fasteners hole pattern from canted web (12) into lower flange of replacement longeron (6) and install clecos as you progress.

20. Install the aft fuselage fairing (3, Figure 3) with clecos.

    a. Transfer existing fasteners holes from the aft fuselage panel (13, Figure 5) and aft fuselage fairing (3, Figure 3) into the vertical flange of the new machined longeron (6, Figure 5).

-NOTE-

Removal of clecos will be required for the following steps. Make sure the in-plane relationship between the longerons (4 and 6) is maintained at all times.

21. Position the splice angle (5) against the upper surface of the canted web (12) and against the inner face of each vertical flange of the longerons (4 and 6, Figure 5, SECTION H-H).

22. Use a felt pen and mark each hole that will be drilled in the splice angle (5):

    a. Remove the splice angle (5) and verify that enough edge distance exists at all the required fastener locations. Pay particular attention to the most aft fastener location on the vertical flange of the splice angle (5).

    b. If the most aft hole on the vertical flange indicates a low edge distance condition (less than 1.5D), cut the aft section of the splice angle (5) as shown in Figure 5, Sheet 1, and View J-J to clear the most aft fastener.

23. Re-install the splice angle (5) and transfer existing airframe fastener hole pattern into lower flange of the splice angle (5) and install clecos.

-NOTE-

Replacement stiffeners (1A and 3A), which are currently available from spares do have joggled flanges at each extremity which will match the additional thickness of the new splice angle (5). Therefore, they will not require the use of tapered shims (7). Omit step 24 when stiffeners (1A and 3A) are being used.

24. If the original stiffeners (1 and 3) are being re-used and do not have a joggled flange at each end, accomplish the following:

    a. Fabricate tapered shims (7) to pick the removed fasteners from stiffeners (1 and 3). Shims shall have a constant taper from 0.080 inch (stock) (2.03 mm) down to 0.010 inch (0.25mm). Make sure proper edge distance of 2D minimum exist at inboard tip of each shim (7).

b. Locate tapered shims (7) in position between canted web (12) and existing stiffeners (1 and 3).

c. Transfer existing airframe fastener hole pattern into each tapered shim (7).

-NOTE-

Deburr not to exceed 0.005 inch depth

25. Remove all repair parts; deburr all holes and edges; remove debris and loose material.

-NOTE-

Do not soak parts to be bonded with cleaner. Use of a moistened rag is recommended.

26. Remove paint from vertical flange and radius of existing RHS longeron (4) and replacement RHS longeron (6) common only to splice angle (5) and clean for bonding (Figure 5, SECTION H-H). Do not remove primer from faying surfaces.

-NOTE-

Do not apply excessive amount of sealant on faying surfaces. Maintain a thin and uniform layer.

27. Apply sealant (C-251) to faying surfaces. Locate replacement RHS longeron (6) in position as per Step 10.

-NOTE-

Do not install fasteners common to RHS splice (5) angle at this time. Use clecos coated with petrolatum (C-008) instead.

Install all rivets and pins wet with sealant (C-251) while faying surface sealant is still wet.

28. Secure replacement RHS longeron (6) using previously recorded fasteners.

29. Locate and secure the aft upper fairing (3, Figure 3) using previously recorded fasteners and new fasteners shown in Figure 5, Sheet 1 and Figure 5, View K-K.

30. Remove excess sealant squeeze-out.

31. Allow to cure at room temperature for 24 hours.

32. Locate RHS splice angle (5, Figure 5), tapered shims (7) and stiffeners (1and 3) with clecos using holes common to the web.

33. Measure gap between vertical flange of existing RHS longeron (4), replacement RHS longeron (6) and vertical flange of RHS splice angle (5). If gap is greater than 0.030 inch (0.76 mm), contact Product Support Engineering with additional information describing the extent of the gap. If the gap is less than 0.030 inch (0.76 mm) proceed as follows:

    a. Use shim (10) and peel as required in order to match gap measured between the vertical flange of splice angle (5) and either flange of RHS longeron (4 and 6) within 0.003 inch (0.076 mm).

34. Locate peelable shim (10) into position between external flange of splice angle (5) and inner face of RHS longerons (4 and 6) and maintain shim in position.

35. Transfer holes from vertical flange of RHS longeron (4 and 6) into shim (10).

36. Increase size of holes (Qty. 8) in RHS longeron (4 and 6), splice angle (5), tapered shims (7) and stiffeners (1 and 3). Final ream to proper diameter (0.1635 to 0.1655 inch) for installation of Hi-Lok fasteners.

37. Remove RHS splice angle (5), tapered shims (7), stiffeners (1 and 3) and peelable shim (10). Deburr all holes.

-NOTE-

Do not apply excessive amount of sealant on faying surfaces. Maintain a thin and uniform layer. Ensure gap in fillet radius between splice angle and longerons is filled with sealant (Figure 5, Section H-H).

38. Apply sealant (C-251) to faying surfaces (Figure 5, SECTION H-H). Locate RHS splice angle (5), tapered shims (7), stiffeners (1 to 3) and peelable shim (10) in position.

-NOTE-

Install all fasteners wet with sealant (C-251) while faying surface sealant is still wet.

Do not apply or allow sealant on threads of pins.

39. Secure splice angle (5), tapered shims (7), stiffeners (1 and 3) and peelable shims (10) using fasteners shown in Figure 5 and previously recorded fasteners, grip length to suit.

40. Remove excess sealant squeeze-out.

41. Allow to cure at room temperature for 24 hours.

42. Prime all bare metal surfaces using primer (C-204). Allow to dry.

43. Seal all edges of modification area using sealant (C-251). Allow to dry.

44. With the tailboom drill plate installed to the three undisturbed tailboom attachment fittings. Using a drill bushing, drill a 0.250 inch (6.35 mm) diameter hole in the aft face of the new longeron (6):

    a. Increase in steps the diameter of the hole and ream to a final dimension of 0.376 to 0.378 inch (9.55 to 9.60 mm) diameter.

    b. Spot face the forward face of the new hole in the new longeron (6) to 0.750 inch (19.05mm) diameter with a 0.030 inch (0.76 mm) radius and a maximum depth of 0.010 inch (0.25 mm).

45. Remove tailboom drill plate and aft fuselage bulkhead (9). Clean residual cutting fluids and deburr hole.

-NOTE-

If the drill plate moves (wobble) in any direction by applying light hand pressure at each corner, it is an indication that the longeron fittings might be out of plane.

46. Verify that the four longeron/fittings are in plane within 0.002 inch (0.050 mm).

CAUTION

The tailboom attachment drill plate can be deformed if more than tare torque is applied to the tailboom attachment hardware. This condition can alter the in-plane gap measurements.

-NOTE-

Four spacers of equivalent thickness (within 0.001 inch (0.025 mm)) are required between each tailboom attachment fitting and the drill plate to prevent interference with the aft fuselage panels.

    a. Position the tailboom attachment drill plate and spacers (7, Figure 2) against all four longerons/fittings and insert the tailboom attachment bolts with washers through each fitting. Install washers and nuts. Thread the nuts until they are just seated against the fitting.

b. Verify that all longerons/fittings are in plane with each other within 0.002 inch (0.050 mm) using the drill plate as a reference. The measured gaps between the drill plate and the longerons/fittings shall be constant on the entire longeron/fitting aft face. If a difference exceeding 0.002 inch (0.050 mm) is observed between any recorded gap values, please contact Product Support Engineering for further instructions.

47. Apply chemical film (C-100) to spot face and hole surface of inner diameter.

48. Prime all bare metal surfaces using primer (C-204). Allow to dry.

49. If you also modify the opposite side of the fuselage, accomplish **PART I** at this time.

50. Refer to procedure found in TB 407-07-78 to re-install the aft fuselage bulkhead (9) and tailboom access door nutplates.

    a. If existing aft fuselage bulkhead (9) 206-032-308-103 or 206-032-308-121 is re-installed, secure using existing fasteners and new fasteners shown in Figure 5, View K-K.

    b. If existing or new aft fuselage bulkhead (9) 407-030-027-101 or 407-030-027-107 is installed, secure using fasteners specified in TB 407-07-78 and new fasteners shown in Figure 5, View K-K.

51. Cap seal fastener tails with sealant (C-251) (Figure 5, View K-K).

52. Remove all protective covers previously installed on equipment located on canted web.

53. Reassemble aircraft by installing all items that were previously removed in PREPARATION steps 2,3,4 and 5 (407-MM, Chapter 53, 65, 71).

54. Annotate helicopter technical records to indicate compliance with **PART II** of this Technical Bulletin.

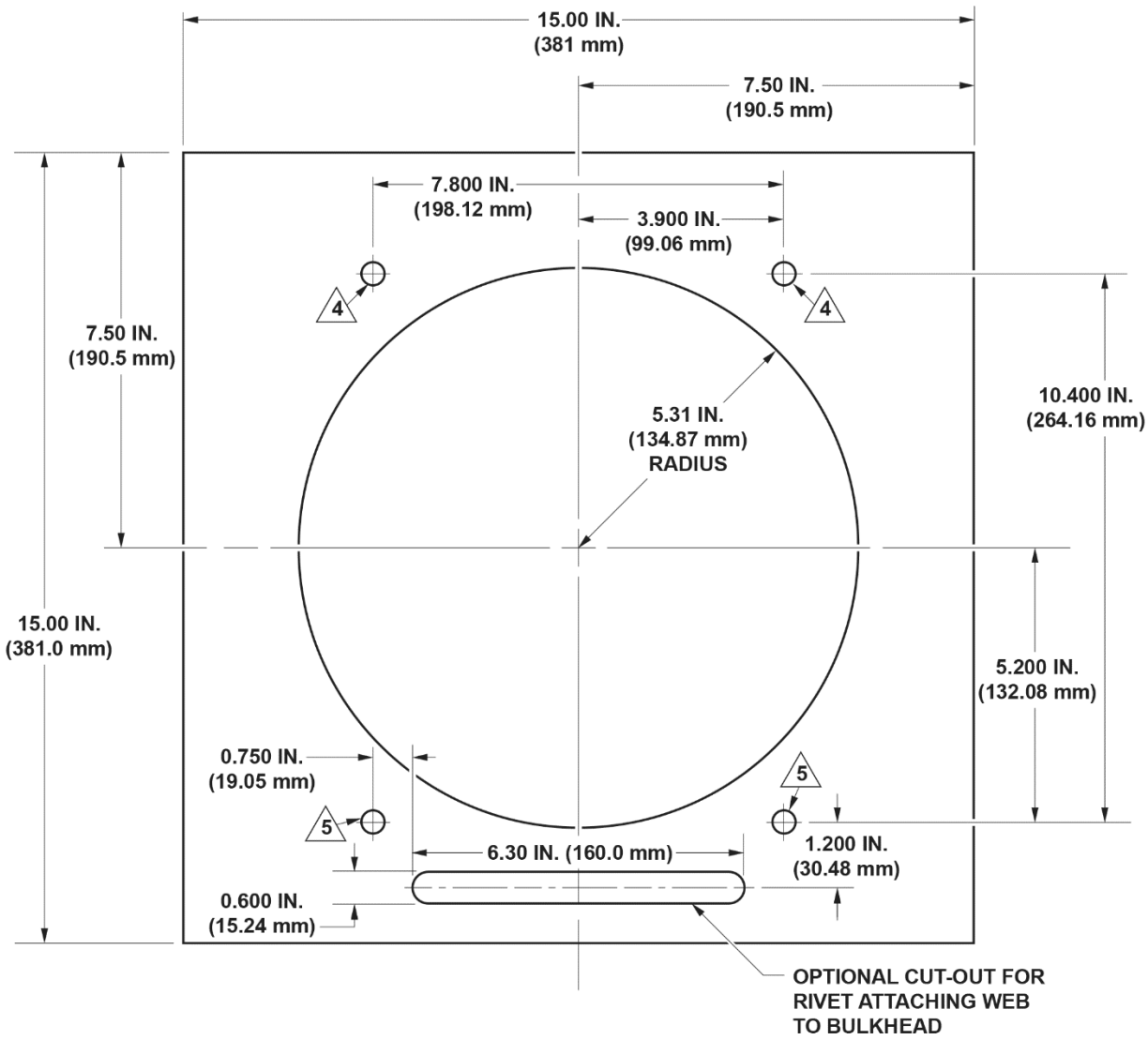

NOTES

1. Make from 0.50 Aluminum plate-surface flat within ±0.001 inch (0.03 mm).
2. Install drill bushings in four holes for extended plate life.
3. Tolerance (in inches) .XXX = ±0.003, .XX = ±0.01, except as noted.

4 Drill and ream perpendicular to surface 0.4385 to 0.4405 inch (11.138 to 11.189 mm).

5 Drill and ream perpendicular to surface 0.3760 to 0.3780 inch (9.550 to 9.601 mm).

14533_001

Figure 1 –Fabrication of Drill Plate.

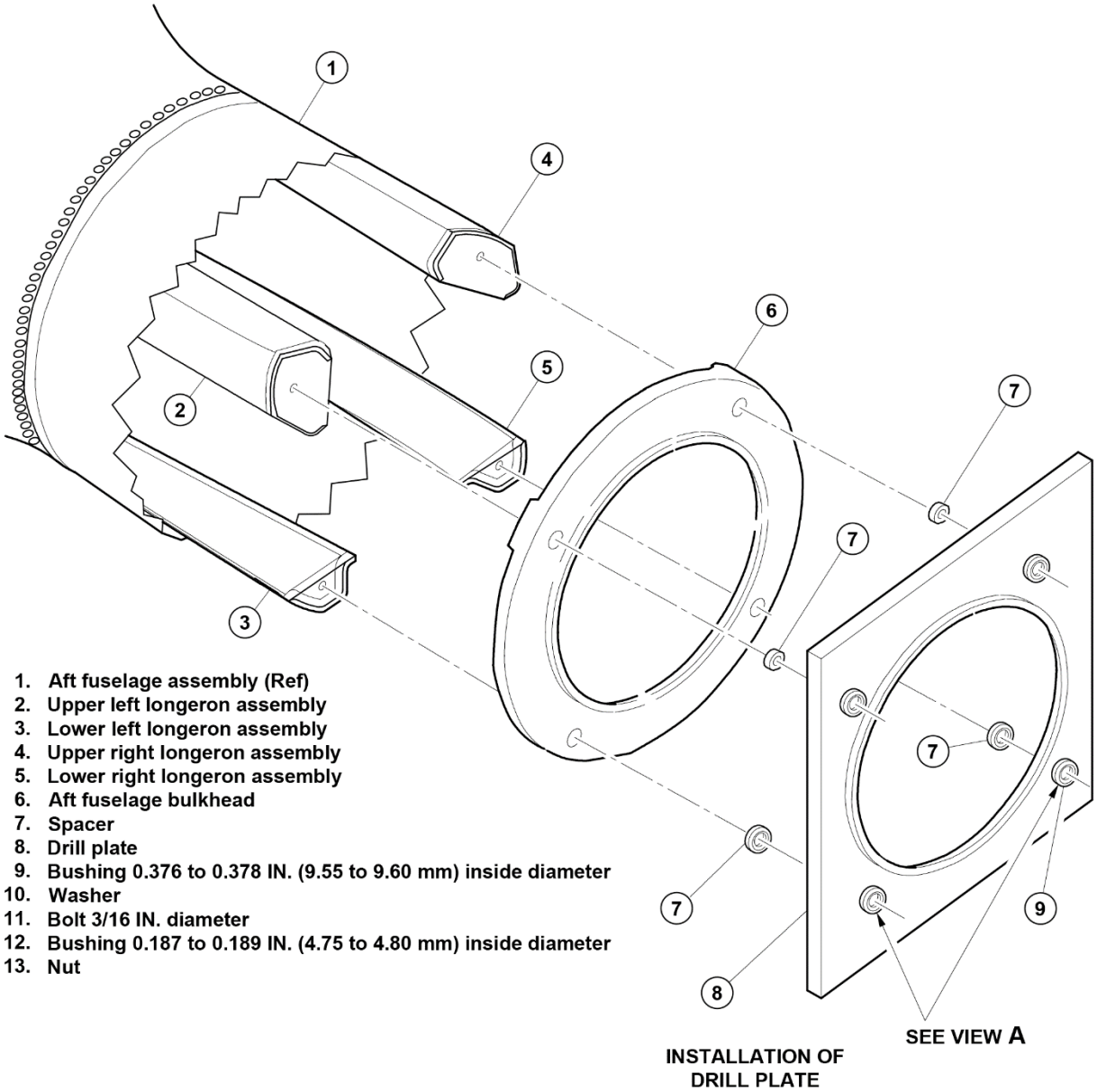

1. Aft fuselage assembly (Ref)
2. Upper left longeron assembly
3. Lower left longeron assembly
4. Upper right longeron assembly
5. Lower right longeron assembly
6. Aft fuselage bulkhead
7. Spacer
8. Drill plate
9. Bushing 0.376 to 0.378 IN. (9.55 to 9.60 mm) inside diameter
10. Washer
11. Bolt 3/16 IN. diameter
12. Bushing 0.187 to 0.189 IN. (4.75 to 4.80 mm) inside diameter
13. Nut

NOTE

A quantity of four spacers of same thickness within 0.001 inch (0.03 mm) may be used to clear interference between drill plate and aft fuselage skins. Verify that there is no gap between longeron and aft fuselage bulkhead.

14533_002a

Figure 2 – Installation of Drill Plate on Aft Fuselage (Sheet 1 of 2)

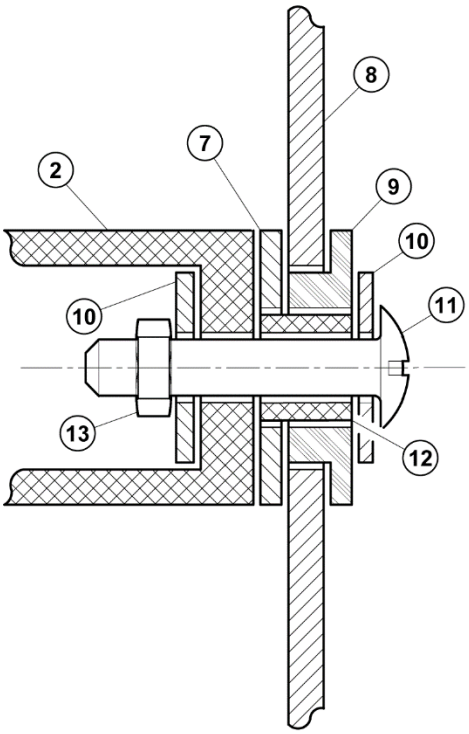

VIEW A

14533_002b

Figure 2 – Installation of Drill Plate on Aft Fuselage (Sheet 2 of 2)

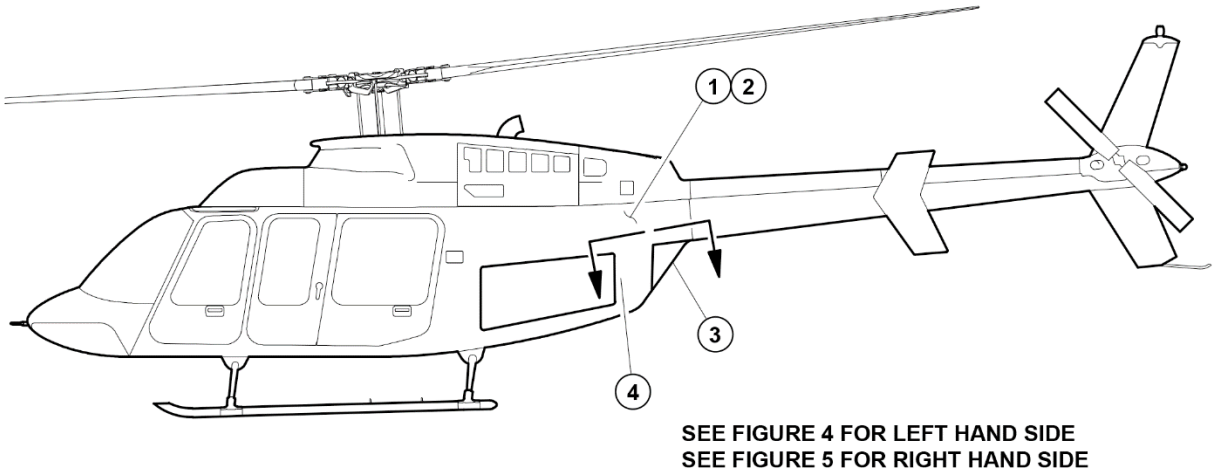

1. **Left hand AFT Fuselage Panel**
2. **Right hand AFT Fuselage Panel**
3. **AFT Fuselage Fairing (206-033-310-105)**
4. **Bulkhead panel (206-031-340-009)**

14533_003

Figure 3 – Aft Lower Machined Longerons, Installation of.

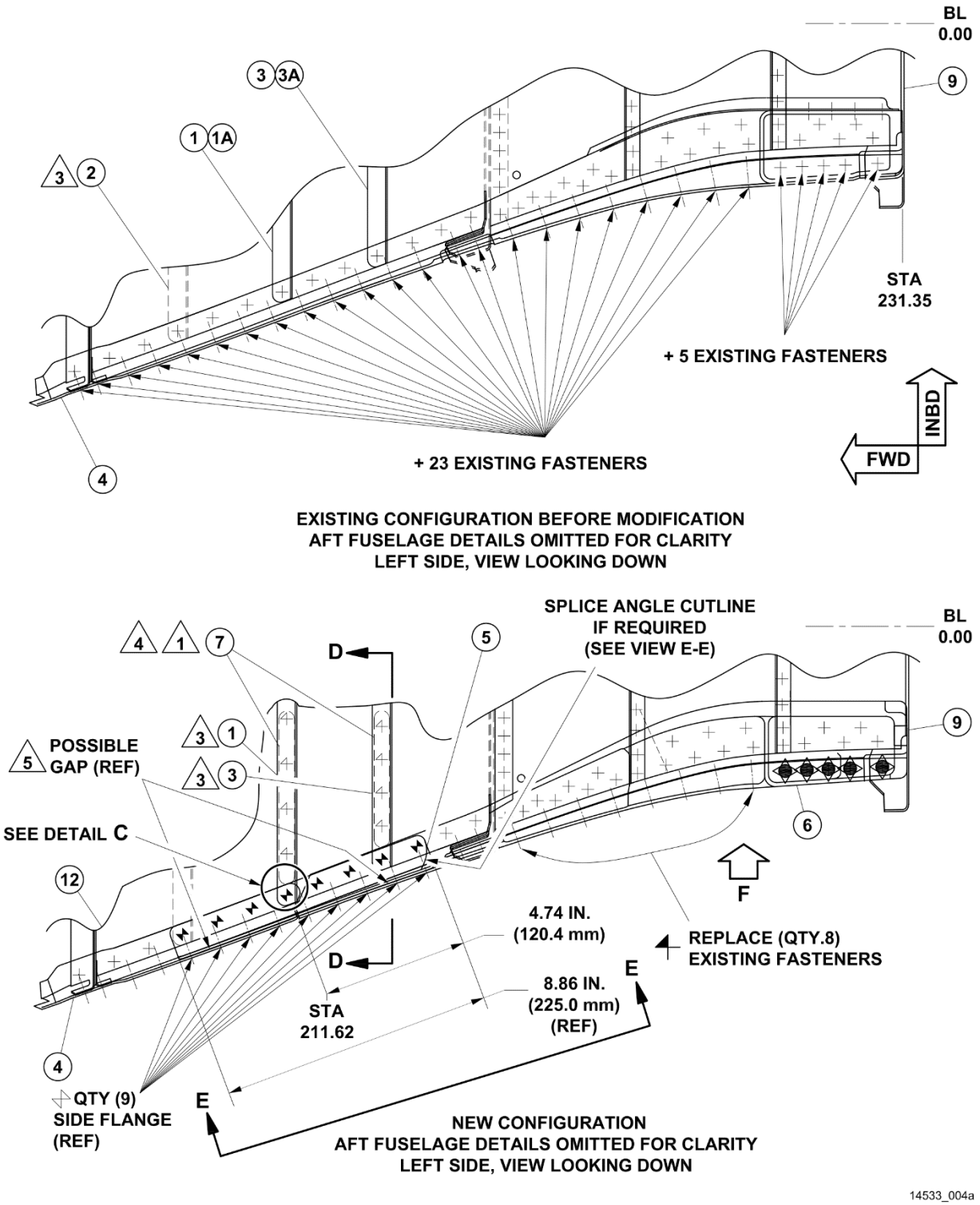

Figure 4 – Tailboom Attachment Longerons 407-030-014-101 (LHS), Installation of (Sheet 1 of 4)

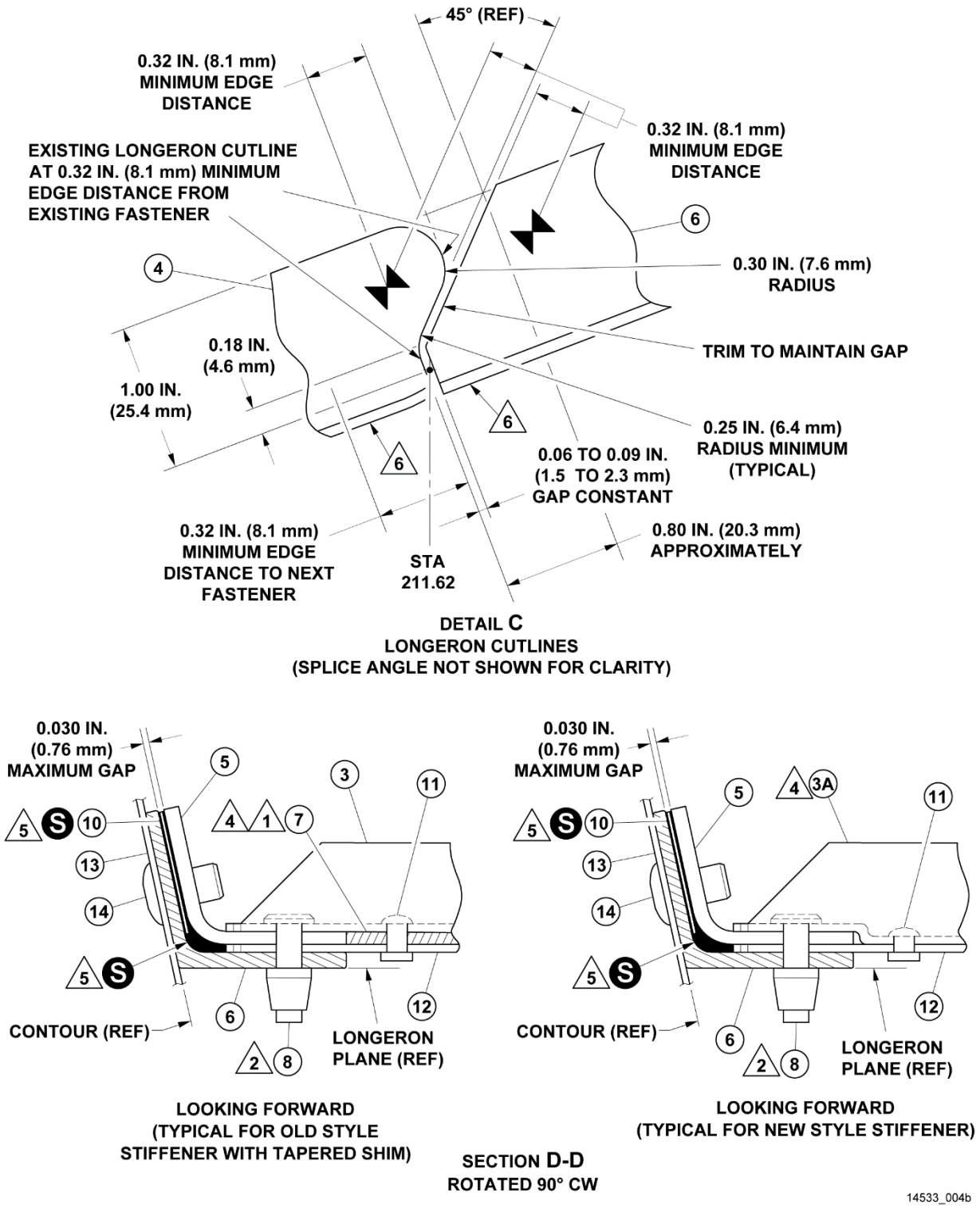

Figure 4 – Tailboom Attachment Longerons 407-030-014-101 (LHS), Installation of (Sheet 2 of 4)

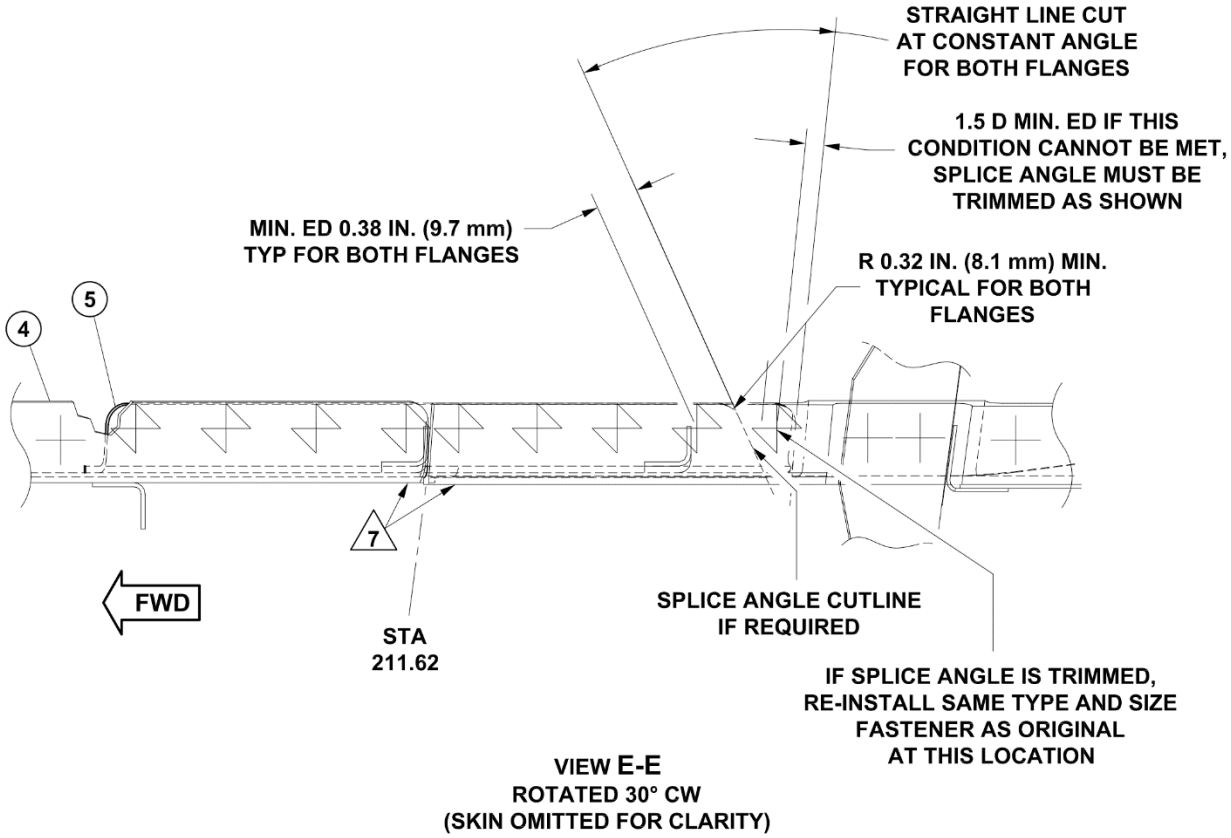

VIEW E-E
ROTATED 30° CW
(SKIN OMITTED FOR CLARITY)

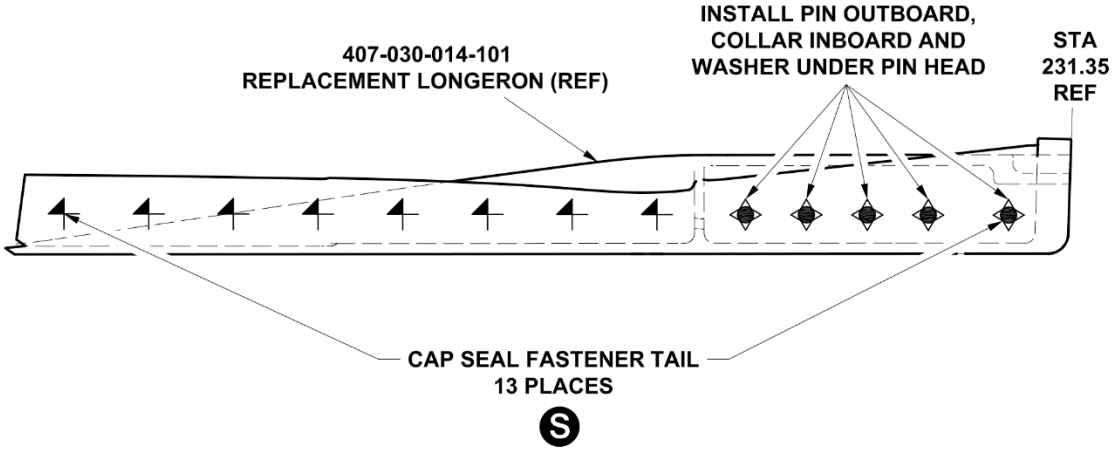

VIEW F

14533_004c

Figure 4 –Tailboom Attachment Longerons 407-030-014-101 (LHS), Installation of (Sheet 3 of 4)

1. Stiffener (206-032-309-141)
1A. Stiffener (206-032-309-225)
2. Stiffener (206-032-309-139)
3. Stiffener (206-032-309-143)
3A. Stiffener (206-032-309-227)
4. Left hand longeron (206-032-319-017/-131)
5. Splice angle (206-032-319-169A)
6. New improved machined longeron (407-030-014-101S) (left side)
7. Tapered shim (make from Al Alloy, 2024T3, 0.750 inch wide (19.05 mm) x 6.0 inches long (152 mm) x 0.080 inch thick (2.03 mm).
8. Hi-lok pin (100-048-5) and collar (30-015-5)
9. Aft fuselage bulkhead (206-032-308-103/-121 or 407-030-027-101/107) (Ref)
10. Peelable shim (120-098-10A41)
11. Rivet (MS20615-4MP)
12. Canted web (206-032-309-xxx) (Ref)
13. Aft fuselage panel assembly (Ref)
14. Rivet (NAS9307M-5)
15. Rivet (NAS9307M-4)
16. Hi-Lok pin (100-145-6), collar (30-277-6) and washer (NAS1149E0316R)

RIVETS / FASTENERS

Existing fasteners

Replace existing fasteners with Hi-lok pin and collar (8)

Replace existing fasteners with rivets (14)

Replace existing fasteners with rivets (11)

Replace existing fasteners with rivets (15).

Replace existing fasteners with Hi-lok pin, collar and washer (16).

S SEALANT (C-251)

NOTES

1 Taper shim from 0.080 inch (2.03 mm) to 0.010 inch (0.25 mm).

2 Replace existing fasteners by Hi-lok pins (100-048-5) and collars (30-015-5).

3 Installed on helicopter S/N 53000 through 53553.

4 Tapered shims are not required when stiffeners (206-032-309-225 or -227) are used.

5 Fill gap with peelable shim and sealant (C-251) maximum 0.021 inch (0.53 mm).

6 Outboard surfaces of flanges to be on same plane.

7 Step between mating longerons at this location is acceptable.

14533_004d

Figure 4 – Tailboom Attachment Longerons 407-030-014-101 (LHS), Installation of (Sheet 4 of 4)

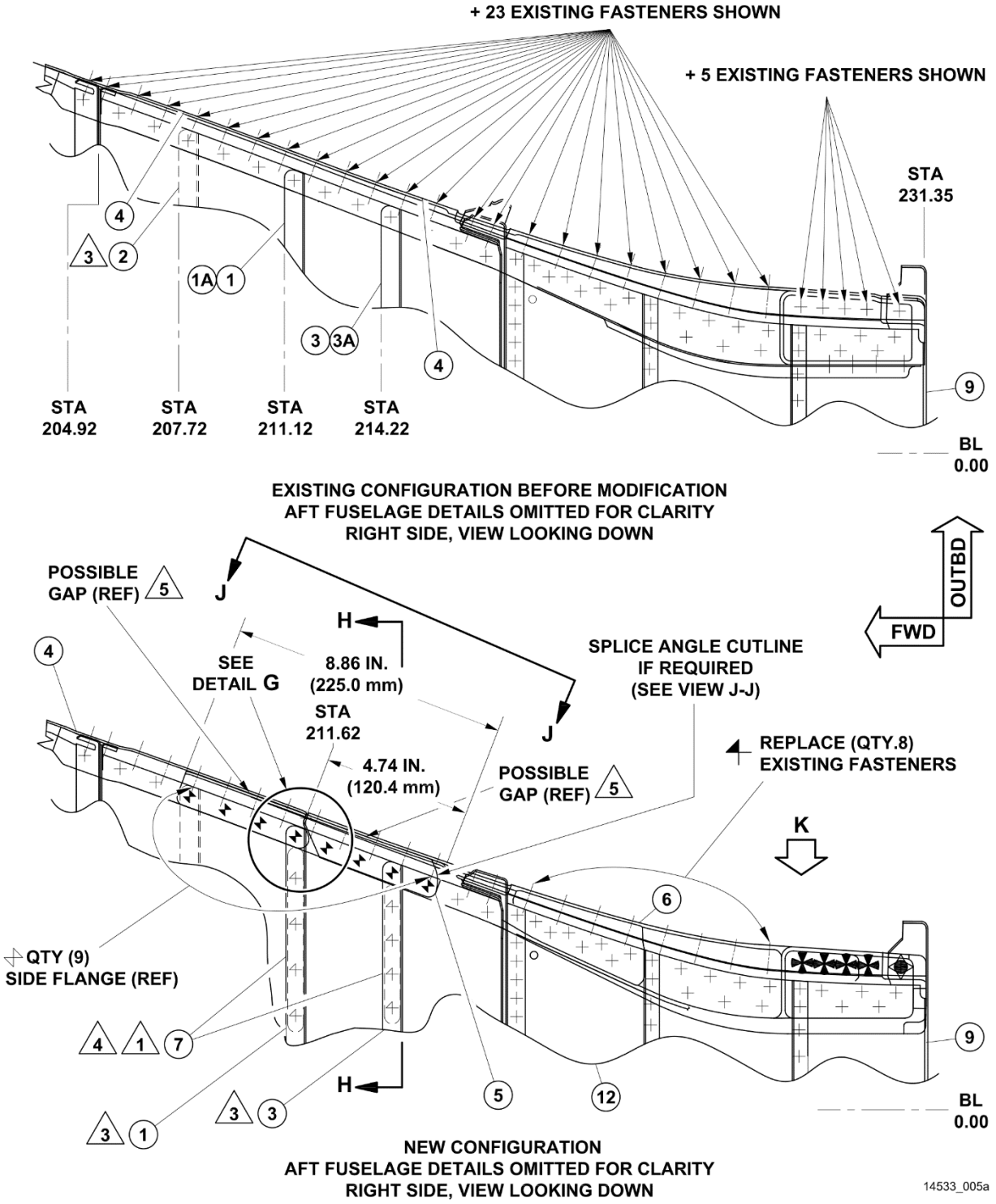

Figure 5 – Tailboom attachment longerons 407-030-014-102 (RHS), installation of (Sheet 1 of 4)

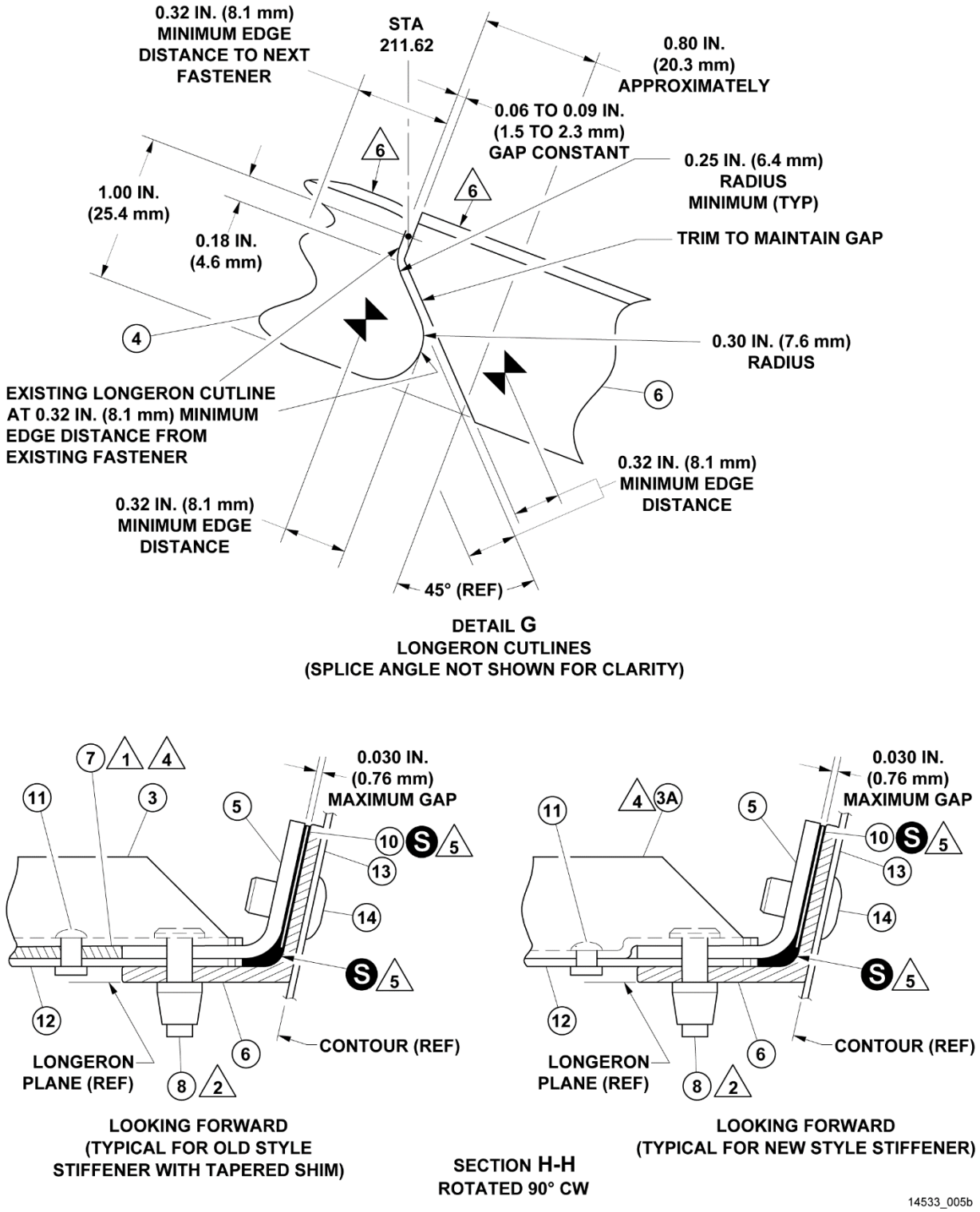

Figure 5 – Tailboom attachment longerons 407-030-014-102 (RHS), installation of (Sheet 2 of 4)

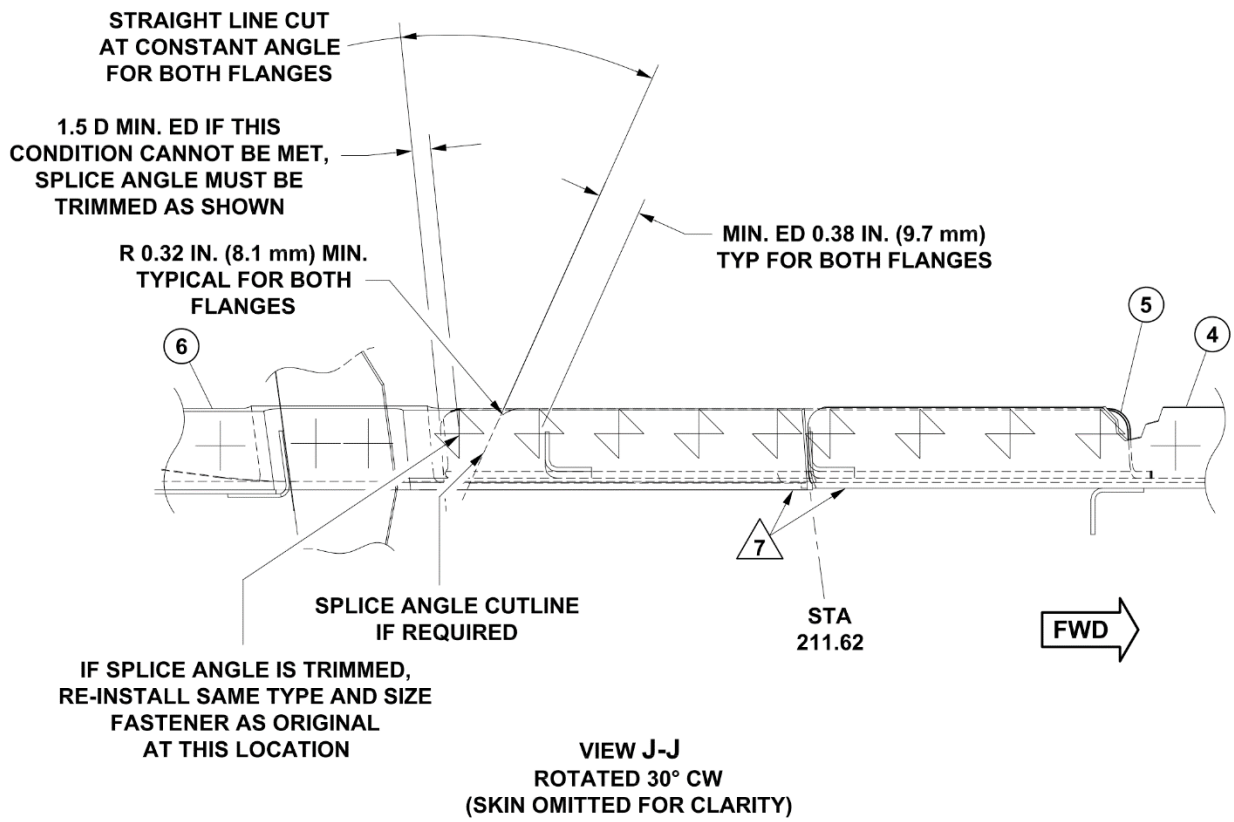

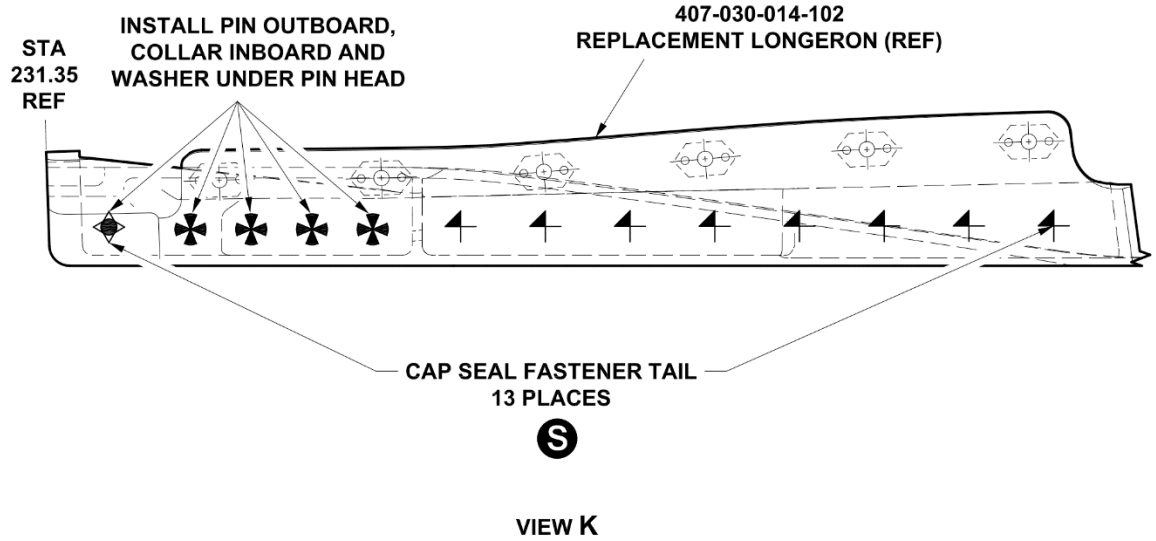

14533_005c

Figure 5 – Tailboom attachment longerons 407-030-014-102 (RHS), installation of (Sheet 3 of 4)

1. Stiffener (206-032-309-141)
1A. Stiffener (206-032-309-225)
2. Stiffener (206-032-309-139)
3. Stiffener (206-032-309-143)
3A. Stiffener (206-032-309-227)
4. Right hand longeron (206-032-319-107/133/145)
5. Splice angle (206-032-319-170A)
6. New improved machined longeron (407-030-014-102S) (right side)
7. Tapered shim (make from Al Alloy, 2024T3, 0.750 inch wide (19.05 mm) x 6.0 inches long (152 mm) x 0.080 inch thick (2.03 mm).
8. Hi-lok pin (100-048-5) and collar (30-015-5)
9. Aft fuselage bulkhead (206-032-308-103/-121 or 407-030-027-101/107) (Ref)
10. Peelable shim (120-098-10A41)
11. Rivet (MS20615-4MP)
12. Canted web (206-032-309-xxx) (Ref)
13. Aft fuselage panel assembly (Ref)
14. Rivet (NAS9307M-5)
15. Rivet (NAS9307M-4)
16. Hi-Lok pin (100-145-6), collar (30-277-6) and washer (NAS1149E0332R)
17. Hi-Lok pin (100-048-6), collar (30-015-6) and washer (NAS1149D0316J)

RIVETS / FASTENERS

Existing fasteners

Replace existing fasteners with Hi-lok pin and collar (8).

Replace existing fasteners with rivets (14).

Replace existing fasteners with rivets (11).

Replace existing fasteners with rivets (15).

Replace existing fasteners with Hi-lok pin, collar and washer (16).

Replace existing fasteners with Hi-lok pin, collar and washer (17).

S SEALANT (C-251)

NOTES

1. Taper shim from 0.080 inch (2.03 mm) to 0.010 inch (0.25 mm).
2. Replace existing fasteners by Hi-lok pins (100-048-5) and collars (30-015-5).
3. Installed on helicopter S/N 53000 through 53553.
4. Tapered shims are not required when stiffeners (206-032-309-225 or -227) are used.
5. Fill gap with peelable shim and sealant (C-251) maximum 0.021 inch (0.53 mm).
6. Outboard surfaces of flanges to be on same plane.
7. Step between mating longerons at this location is acceptable.

14533_005d

Figure 5 – Tailboom attachment longerons 407-030-014-102 (RHS), installation of (Sheet 4 of 4)