A Textron Company

TECHNICAL BULLETIN 429-17-53

19 September 2017
Revision A, 29 January 2020

MODEL AFFECTED: **429**

SUBJECT: **GUTTER AND NOSE MODIFICATION, INTRODUCTION OF**

HELICOPTERS AFFECTED: **Serial numbers 57001 through 57309.**

[Serial number 57310 and subsequent will have the intent of this bulletin accomplished prior to delivery.]

COMPLIANCE: At customer's option.

DESCRIPTION:

Bell Helicopter has received reports of moisture in the nose compartment through the battery door and vent system. This Technical Bulletin provides instructions to install a new gutter on the nose center panel along with vent and drain improvements.

Applicability of this bulletin to any spare part shall be determined prior to its installation on an affected helicopter.

Revision A of this bulletin introduces Kit part numbers to facilitate ordering the required material. The references to the Maintenace Manuals were also updated to reflect the S1000D format. The figures were also merged into a single figure.

APPROVAL:

The engineering design aspects of this bulletin are Transport Canada Civil Aviation (TCCA) approved.

CONTACT INFO:

For any questions regarding this bulletin, please contact:

Bell Product Support Engineering
INTERMEDIATE Tel: 450-437-2077 / 1-800-463-3036 / productsupport@bellflight.com

MANPOWER:

Approximately 16 man-hours are required to complete this bulletin. This estimate is based on hands-on time and may vary with personnel and facilities available.

WARRANTY:

There is no warranty credit applicable for parts or labor associated with this bulletin.

MATERIAL:

Required Material:
The following material is required for the accomplishment of this bulletin and may be obtained through your Bell Supply Center as a kit under part number **CT-429-17-53-1**.

Part Number	Nomenclature	Qty (Note)
429-075-107-107	Vent Tube (Forward)	1
100-050B500	Plug	1
140-001-1	Washer	10
429-030-720-117	Gutter RH	1
429-075-107-105	Vent Tube (Aft)	1
NAS9301B-4-05	Rivet	4
NAS9303B-4-04	Rivet	6
T66NY	Tee	2
429-030-720-101	Gutter LH	1
2640-00145-00	Sleeve (AS1294-2)	1ft
MS21266-2N	Grommet	1
MS3367-1-9	Strap	8
MS35489-150	Grommet	1
MS35489-48	Grommet	1
NAS1097AD4-3	Rivet	5
MS20470AD4-4	Rivet	2
2330-00605-00	Tubing (130-058-6)	3ft
2560-10111-00	Adhesive Sealing Tape	4ft
2000-00165-00	Tape - Drain	A/R (1)(2)(3)
2000-00163-00	Tape - Vent	A/R (1)(2)(3)

NOTES:

1. As Required
2. The tape is not part of CT-429-17-53-1 and must be purchased separately.
3. Tape is sold in Rolls.

Consumable Material:
The following material is required to accomplish this bulletin, but may not require ordering, depending on the operator's consumable material stock levels. This material may be obtained through your Bell Helicopter Textron Supply Center as a kit under part number **CT-429-17-53-3**.

Part Number	Nomenclature	Qty (Note)	Reference *
2230-07608-00	Epoxy Primer	2qt	C-202
2010-00082-00	Corrosion Inhibitor Sealant	6oz	C-251
2000-01042-00	Urethane Adhesive	50 ml	C-301
2000-06022-00	Rubber Adhesive	1pt	C-324

* C-XXX numbers refer to the consumables list in the BHT-ALL-SPM, Standard Practices Manual

SPECIAL TOOLS:

None required.

WEIGHT AND BALANCE:

Not affected

ELECTRICAL LOAD DATA:

Not affected.

REFERENCES:

BHT-429-IPB, Illustrated Parts Breakdown
BHT-429-MM, Maintenance Manual
BHT-429-II-7, Weather Radar
BHT-ALL-SPM, Standard Practices Manual
CSSD-PSE-90-001, Corrosion Control Guide

PUBLICATIONS AFFECTED:

BHT-429-IPB Illustrated Parts Breakdown
BHT-429-MM Maintenance Manual

ACCOMPLISHMENT INSTRUCTIONS:

Battery Vent, Plenum Assembly Drain – Removal

-NOTE-

Wire Strike Protection System, STC #SR02791NY, vent deflector assembly P/N 429-83050-1 fouls with the gutter assembly. If installed, replace the vent deflector with the original battery door assembly P/N 429-030-252-105A.

1. Prepare the helicopter for maintenance.

2. Remove the nose cap (100A) (DMC-429-A-53-00-00-00A-520A-A).

3. If the Weather Radar Kit P/N 429-706-018-101/-103 is installed, remove radome, receiver transmitter and battery door (DMC-429-A-53-00-00-01A-520A-A, DMC-429-A-53-00-00-04A-520A-A, DMC-429-A-97-10-00-01A-520A-A and BHT-429-II-7).

-NOTE-

If ballast weights are installed on the forward nose bulkhead, note the installed location and quantity of the ballast weights prior to removal.

4. If installed, remove ballast weights from the forward nose bulkhead DMC-429-A-08-40-00-04A-169A-A).

5. Remove left (100DL), right (100DR), and upper (100C) nose bay doors (DMC-429-A-53-00-00-06A-520A-A and DMC-429-A-53-00-00-05A-520A-A) to access battery vent provisions.

6. Disconnect the battery and external power and remove the battery (DMC-429-A-96-60-00-00A-520A-A) from the helicopter.

7. Remove the L/H (100EL) chin bubble (DMC-429-A-52-00-00-02A-520A-A).

-NOTE-

Retain existing clamps and hardware for re-installation.

8. Remove clamps (4 and 5, Figure 1) and vent tube (6). Discard vent tube and retain clamps.

9. Remove intake (1) and vent assembly (2) from nose center panel (3, Detail A). Discard intake and vent assembly.

10. Remove clamps (7, 8) and vent tube (9). Discard vent tube and clamp (8). Retain clamp (7).

11. Remove nut (10), washers (11), screw (12), clamp (13) and vent assembly (14). Discard vent assembly. Retain nut, washers, screw and clamp.

12. Remove and discard grommet (15).

13. Remove tie wrap (16, Detail B), screw (17), washer (18) and clamp (19). Discard tie-wrap. Retain screw, washer and clamp.

14. Remove screw (20), washer (21) and clamp (19). Retain screw, washer and clamp.

15. Remove and discard tube (22).

16. Remove and discard grommet (23).

Nose Center Panel – Modification

17. On nose center panel (3), touch countersink qty (5) existing fastener holes to a maximum of 0.010” inch to 0.015” inch (0.25 mm to 0.38 mm). Wet install rivets NAS1097AD4-3 (24, Figure 1, Section D-D) using C-251.

18. Shave rivet heads (24) flush with the nose center panel (3).

19. Install plug (25) in vent hole of nose center panel (3, Detail C) BHT-ALL-SPM.

20. Re-identify the center nose panel (3) as P/N 429-030-155-155 with a white permanent fine point marker.

-NOTE-

Carefully remove adhesive sealing tape (52) with spatula.

21. On nose center panel (3) remove adhesive sealing tape (52) as required to access rivets (26, Detail E).

22. Remove rivets (26 and 27) from nose center panel (3).

23. On frame (28) wet install rivets MS20470AD-4-4 (29, Detail F) with C-251.

24. Coat the two remaining holes with primer (C-202) using a brush or swab of the appropriate size to assure complete coverage. Rivet installation is not required.

Gutter Installation

25. Measure and mark location of holes and overlap junctions on gutter LH (30) and gutter RH (31, Figure 1, Detail G).

-NOTE-

While maintaining the gutter overlap junction measurement, ensure an equal gap between gutter and nose center panel battery door opening for the entire circumference.

26. Verify hole alignment between gutter LH (30), gutter RH (31) and battery door holes on nose center panel (3, Detail H). Trace ten battery door hole positions on gutters.

-NOTE-

Minimum edge distance of one-time shank diameter is acceptable in gutter LH and gutter RH.

-NOTE-

Manufacture quantity (2) blocks (53) the same length and width of the gutter overlap junction.

-NOTE-

Temporarily install blocks (53) inside gutters and position on nose center panel with clamps and clecos. This will ensure the gutters take on the contour of the nose center panel (3) during adhesive cure.

27. Drill #30 qty (10) holes in gutters (30 and 31, detail G). Deburr holes.

28. Apply adhesive on overlap junction between gutter LH (30) and gutter RH (31).

29. Position gutter RH (31) then gutter LH (30) on nose center panel (3). Allow adhesive to cure.

30. Install four blind rivets NAS9301B-4-05 (32), six blind rivets NAS9303B4-04 (33) and ten washers 140-001-1 (34, Detail H). Wet install rivets.

31. Locally touch up blind rivet heads with primer C-202. Paint as required.

32. As required, install adhesive sealing tape (52) (DMC-429-A-53-00-00-04A-600A-A).

New Tubing Configuration Installation

33. Cut tubing (35, 37, 38 and 39, Figure 1) to length.

34. Install tubing (35, 36, 37, 38 and 39) on Tee fittings (40) with straps (41).

35. Install grommet (42, Detail J) with adhesive C-324. Allow to cure.

36. Install tubing (39) through frame assembly, pedestal (43) and grommet (42).

37. Connect tubing (35) to plenum assembly, cockpit vent tube (44).

-NOTE-

Eliminate low point on the gutter drain tube. Trim tube to a maximum of 0.20 inch. (5.08 mm) as required.

38. Connect tubing (38) to LH Gutter (30).

39. Install clamps (19), screw (17) and washer (18). Do not tighten at this time.

40. Install clamp (19), screw (20) and washer (21). Do not tighten at this time.

41. Install grommet (46, Detail K) with adhesive C-324. Allow to cure.

42. Cut grommet (45) to length and install in hole on frame (28) with adhesive C-301. Allow adhesive to cure.

43. Install tube (47) through grommets (45 and 46).

44. Install clamp (13), screw (12), washers (11) and nut (10). Do not tighten at this time.

45. Secure tubes (35 and 38, Detail J) with straps (49).

46. Tighten screws (17 and 20).

47. Install battery (DMC-429-A-96-60-00-00A-720A-A).

48. Tighten nut (10).

-NOTE-

Ensure vent tape (48) arrow is facing in the upward direction, toward the battery.

49. Install vent tape (48) at 2 approximate locations on tube (47).

50. Cut sleeve (50) to cover full length of tube (36). Install on tube (36).

-NOTE-

Ensure drain tape (51) arrow is facing in the downward direction, away from the battery.

51. Install tape (51) at three approximate locations as shown on tubes (35, 38, and 39).

-NOTE-

For aircraft with Weather Radar Kit P/N 429-706-018-103, the end of vent tube (47) will be cut 0.9 inch (22 mm) below grommet of aft radome. Ensure 45-degree bevel faces forward.

52. Cut tube (47, Section L-L).

-NOTE-

Drain tube (39) will be cut 1.0 (25.4 mm) below grommets (42, 46). Ensure 45-degree bevel faces aft.

53. Cut tube (39, Section M-M).

-NOTE-

Inspect all new installations for kinked tubes and fouling on components and/or airframe. Adjust as required, to obtain clearance.

54. Seal grommet (42, Section M-M) and grommet (46, Section L-L).

55. Install the L/H (100EL) chin bubble (DMC-429-A-52-00-00-02A-720A-A).

56. Install left (100DL), right (100DR) and upper (100C) nose bay doors (DMC-429-A-53-00-00-05A-720A-A and DMC-429-A-53-00-00-04A-720A-A).

57. If removed, install ballast weights to the forward nose bulkhead (DMC-429-A-08-40-00-05A-169A-A).

58. If the weather Radar Kit P/N 429-706-018-101/-103 is installed, re-install radome receiver transmitter and battery door (DMC-429-A-53-00-00-02A-720A-A, DMC-429-A-53-00-00-03A-720A-A, DMC-429-A-97-10-00-01A-720A-A and BHT-429-II-7).

59. Install the nose cap (100A) (DMC-429-A-53-00-00-00A-720A-A).

60. Make an entry in the helicopter logbook and historical service records indicating compliance with this Technical Bulletin.

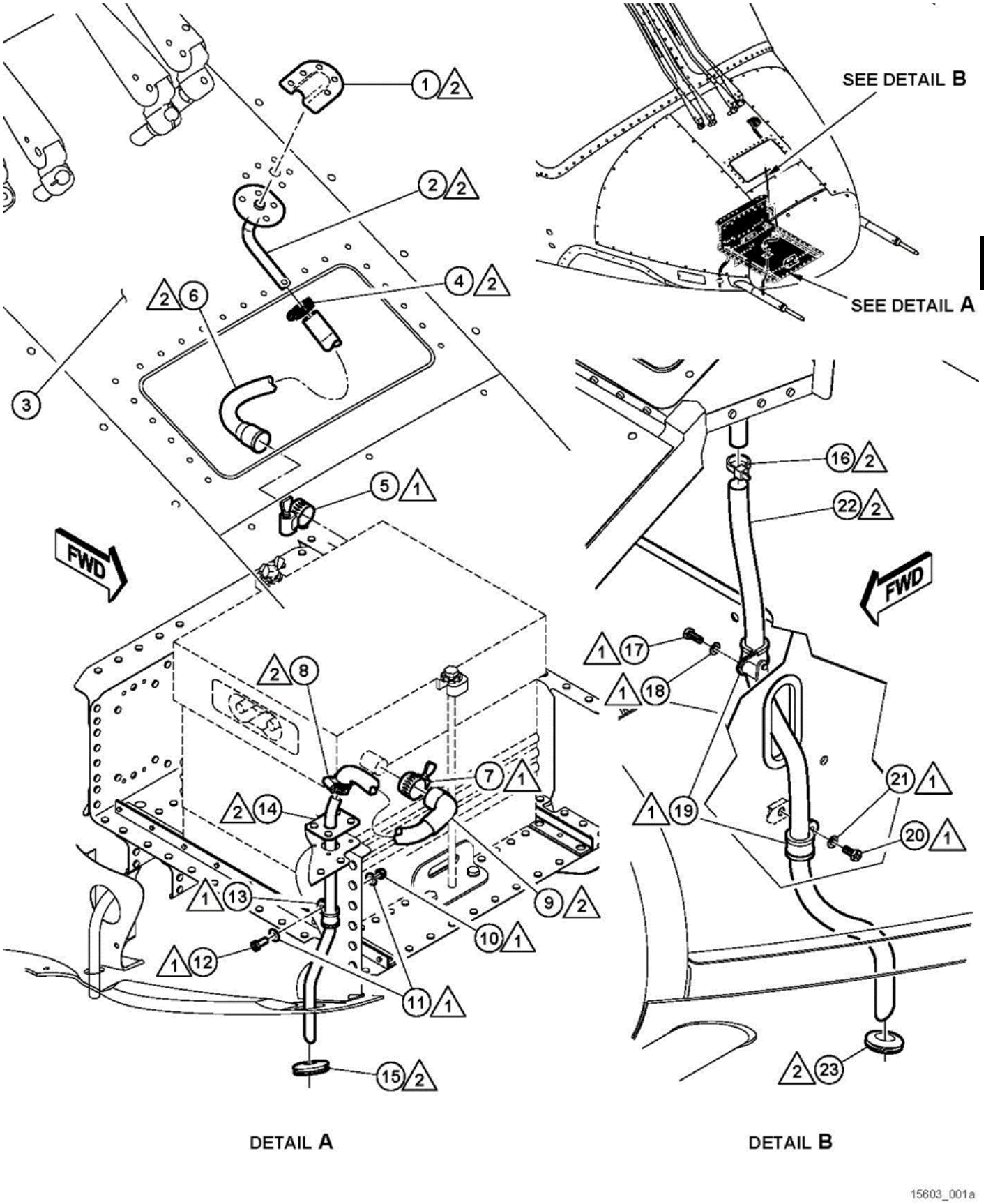

Figure 1 – Gutter Installation and Vent Modification (Sheet 1 of 8)

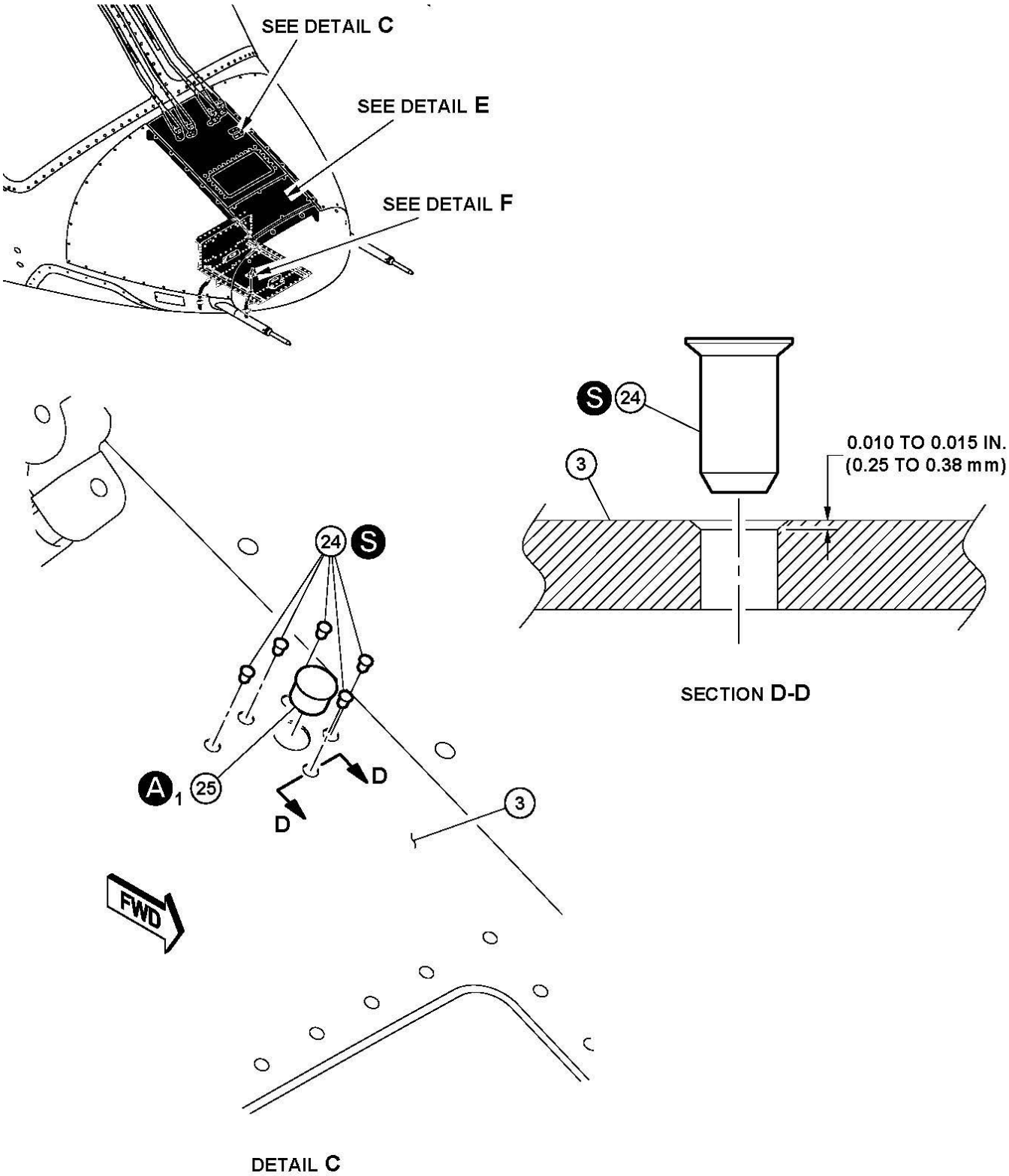

15603_002a

Figure 1 - Gutter Installation and Vent Modification (Sheet 2 of 8)

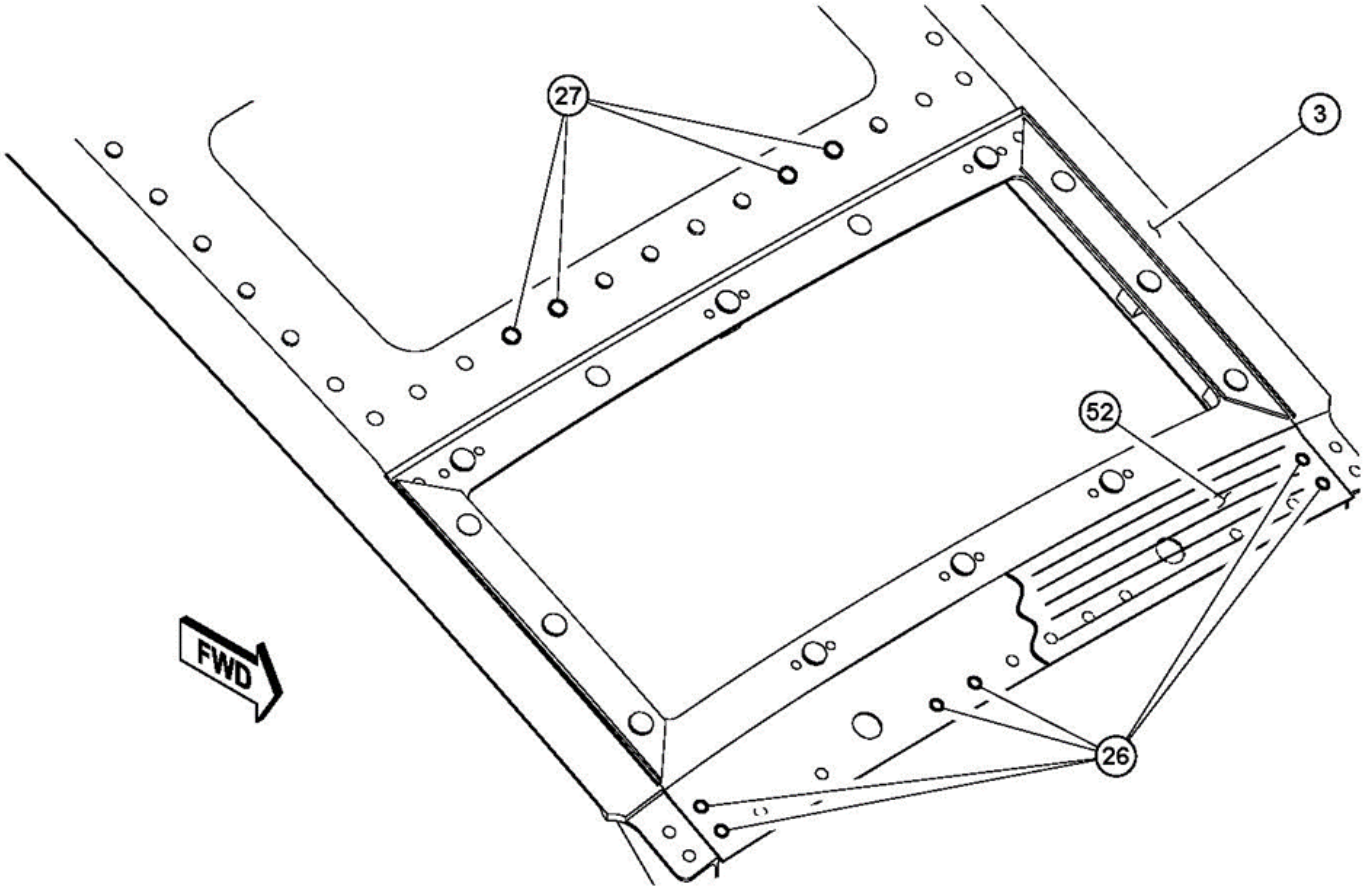

DETAIL E

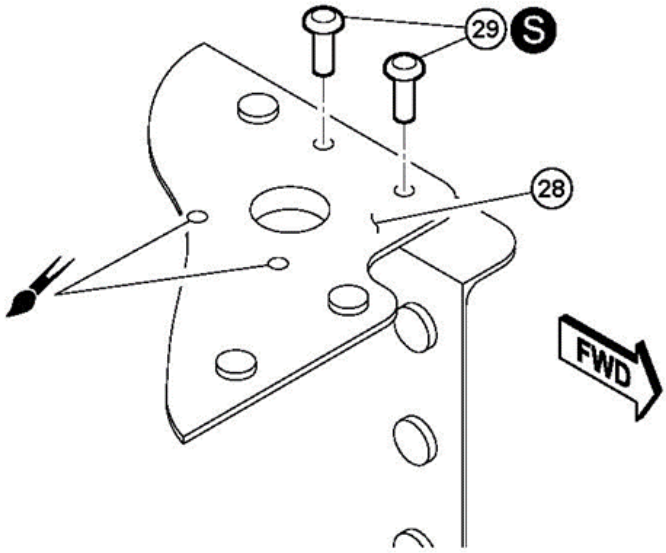

DETAIL F

15603_002b

Figure 1 - Gutter Installation and Vent Modification (Sheet 3 of 8)

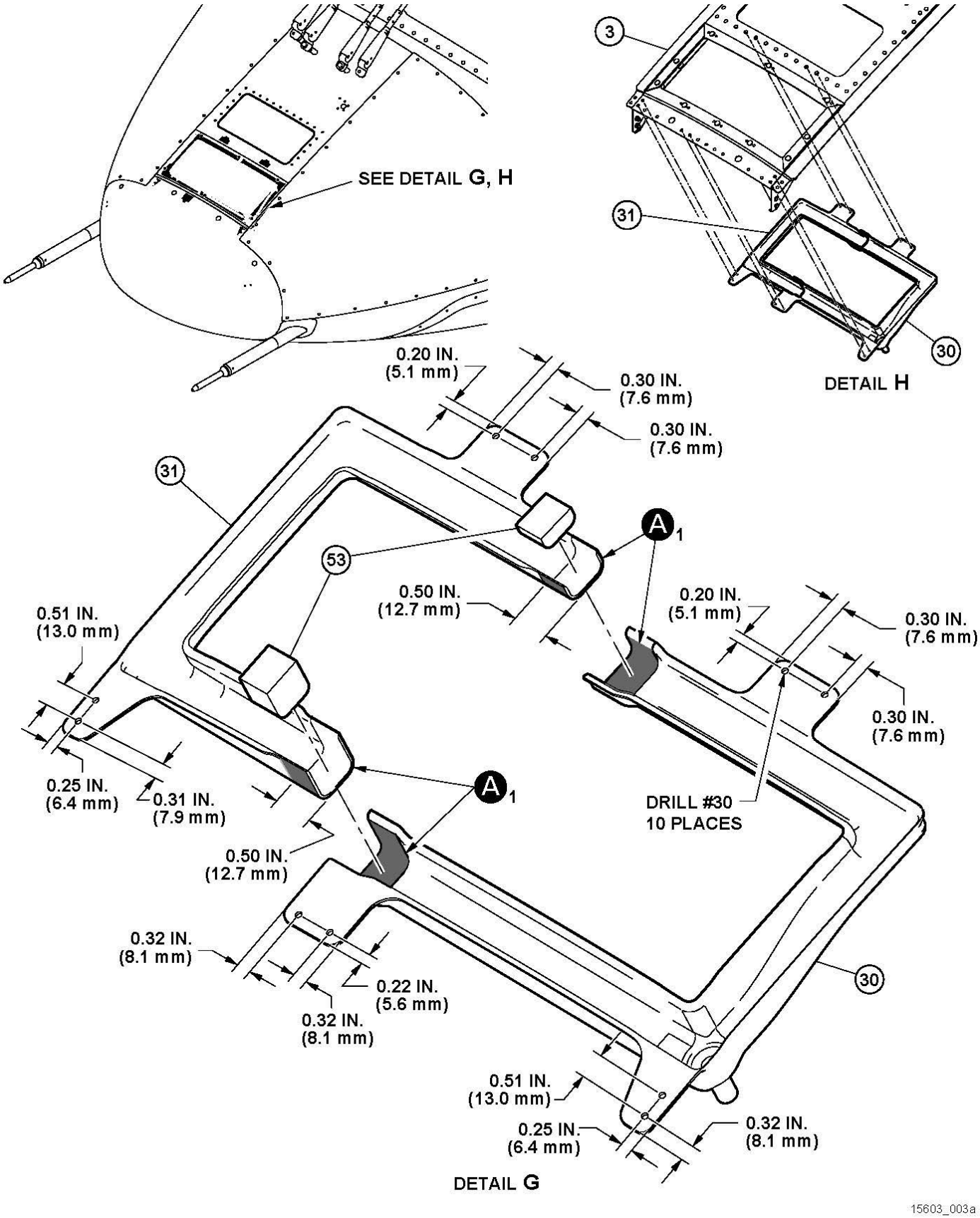

Figure 1 - Gutter Installation and Vent Modification (Sheet 4 of 8)

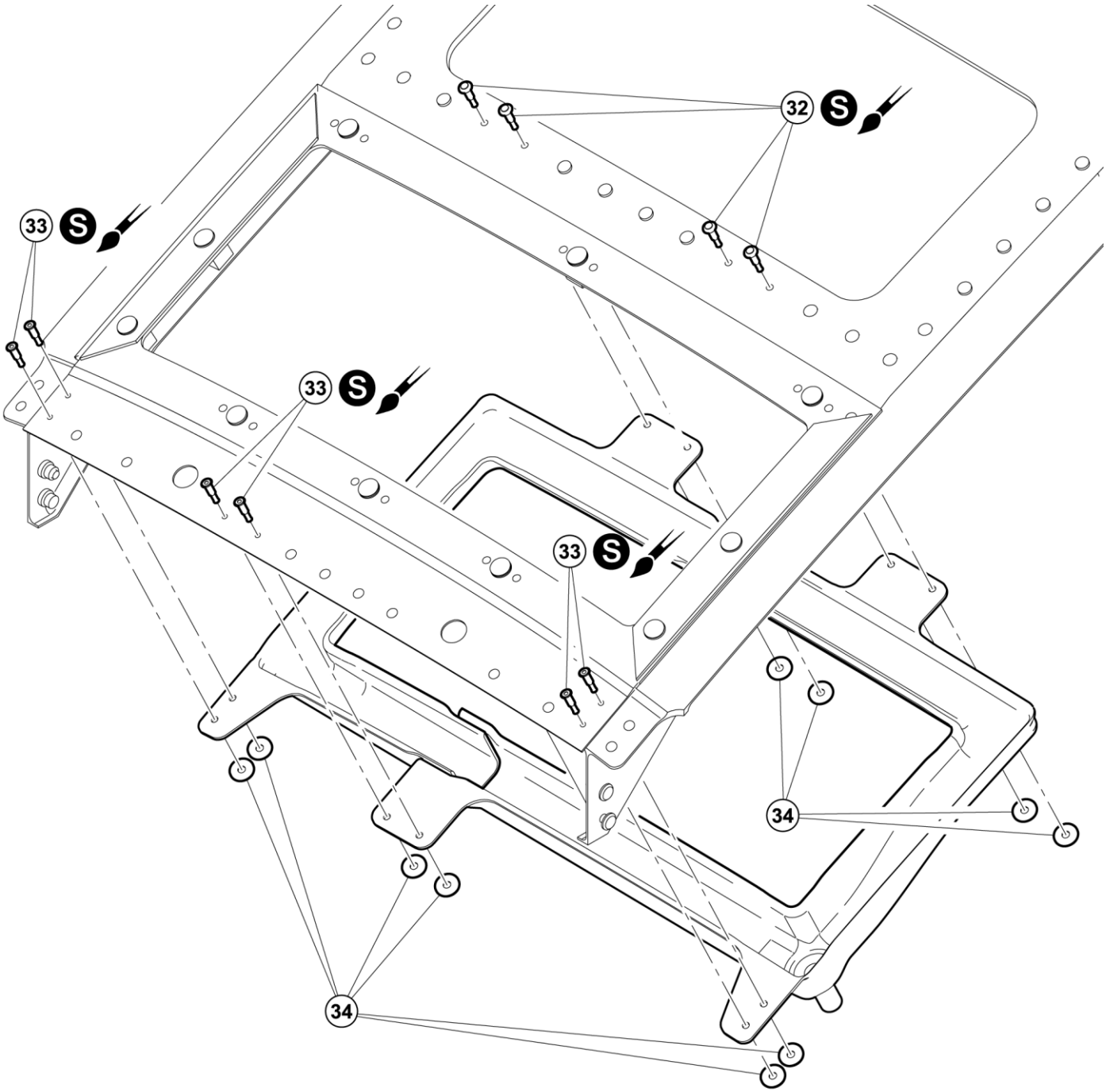

DETAIL H

15603_003b

Figure 1 - Gutter Installation and Vent Modification (Sheet 5 of 8)

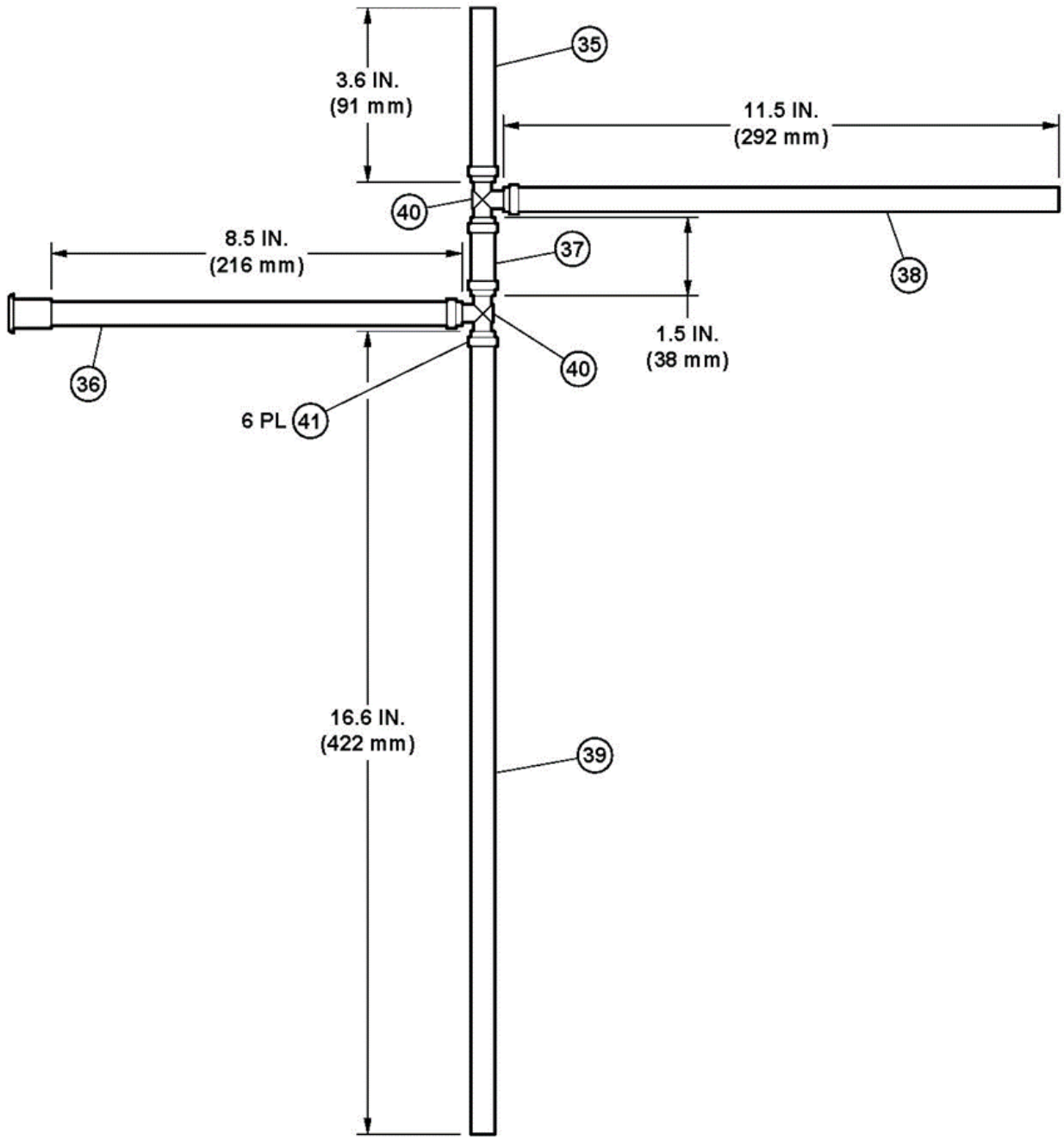

15603_003c

Figure 1 - Gutter Installation and Vent Modification (Sheet 6 of 8)

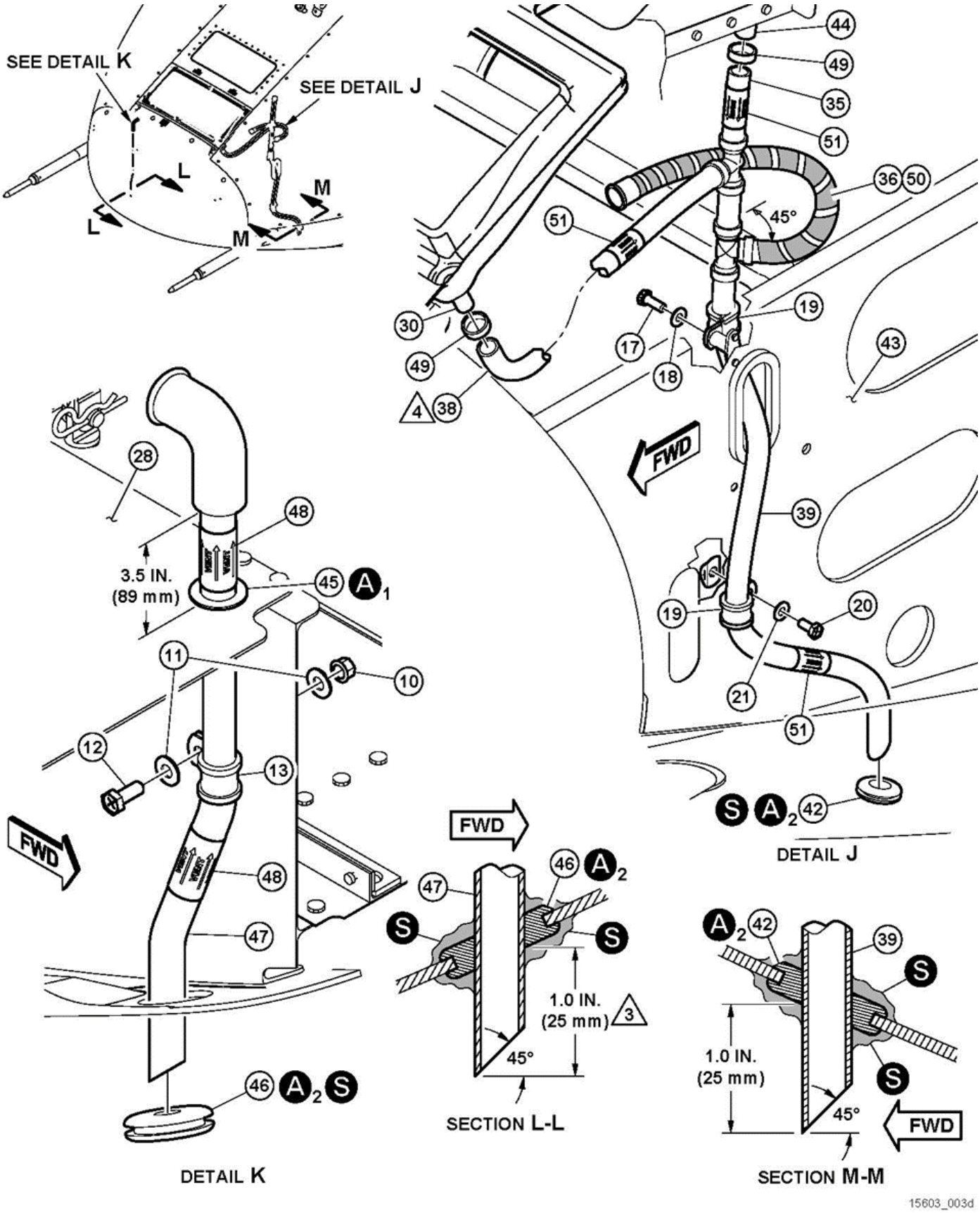

Figure 1 - Gutter Installation and Vent Modification (Sheet 7 of 8)

1. Intake (REF)
2. Vent assembly (REF)
3. Nose Centre Panel (429-030-155-113/155)
4. Clamp (30-116-3)
5. Clamp (AN737TW26)
6. Vent tube (REF)
7. Clamp (AN737TW26)
8. Clamp (30-116-3)
9. Vent tube(REF)
10. Nut (MS21042L3)
11. Washer (NAS1149D0316J)
12. Screw (NAS1801-3-8)
13. Clamp (MS21919WDG6)
14. Vent assembly (REF)
15. Grommet (REF)
16. Strap (REF)
17. Screw (NAS1801-3-9)
18. Washer (NAS1149D0332K)
19. Clamp (MS21919WDG8)
20. Screw (NAS1801-3-7)
21. Washer (NAS1149D0332K)
22. Tube (REF)
23. Grommet (REF)
24. Rivet (NAS1097AD4-3)
25. Plug (100-050B500)
26. Rivet (REF)
27. Rivet (REF)
28. Frame (REF)
29. Rivet (MS20470AD4-4)
30. Gutter LH (429-030-720-101)
31. Gutter RH (429-030-720-117)
32. Rivet (NAS9301B-4-05)
33. Rivet (NAS9303B-4-04)
34. Washers (140-001-1)
35. Tubing (2330-00605-00)
36. Tubing (429-075-107-105)
37. Tubing (2330-00605-00)
38. Tubing (2330-00605-00)
39. Tubing (2330-00605-00)
40. Tee fitting (T66NY)
41. Strap (MS3367-1-9)
42. Grommet (MS35489-150)
43. Frame assembly, pedestal (REF)
44. Cockpit vent tube, plenum assembly (REF)
45. Grommet (MS21266-2N)
46. Grommet (MS35489-48)
47. Tube (429-075-107-107)
48. Tape, Vent (2000-00165-00)
49. Strap (MS3367-1-9)
50. Sleeve (AS1294-2 OR 2640-00145-00)
51. Tape, Drain (2000-00165-00)
52. Sealing tape (2560-10111-00)
53. Block, nylon or wood

A1 ADHESIVE (C-301)

A2 ADHESIVE (C-324)

S SEALANT (C-251)

WET UNREDUCED PRIMER (C-202)

NOTES

1. Keep clamps, screws, washer and nuts.
2. Discard.
3. If the weather radar is installed, cut tube (47) 3 inches from grommet (46).
4. Eliminate low point on tube (38).

17782_001

Figure 1 Gutter Installation and Vent Modification (Sheet 8 of 8)