A Textron Company

TECHNICAL BULLETIN **429-19-61**

28 October 2019
Revision A, 17 August 2020

MODEL AFFECTED: **429**

SUBJECT: **AIR COMM CORPORATION 429EC-200 AND 429EC-202 AIR CONDITIONING SYSTEMS COMPRESSOR CLUTCH RE-WIRE PER SERVICE KIT SK-429EC-800 REVISION C.**

HELICOPTERS AFFECTED: **Serial numbers 57001 through 57344, and 57346 through 57368.**

[Serial number 57345 and 57369 and subsequent will have the intent of this bulletin accomplished prior to delivery.]

COMPLIANCE: Bell recommends accomplishment before April 30th 2020.

DESCRIPTION:

Air Comm Corporation Service Kit 429EC-800 Revision C explains how to modify the wiring of the compressor clutch on the Air Conditioning (AC) system as installed on the Bell 429. The wiring change enhances the grounding to the airframe to increase reliability and system performance.

This wiring change adds a diode for improved noise suppression which also provides additional protection to the Aircraft Data Interface Unit (ADIU) 28 Vdc/Open discrete input at connector 3140A1J1- pin 91 (AC compressor enabled) considering the air conditioning system compressor clutch coil has the potential of generating a large voltage spike each time the Air Conditioning system is switched off.

Approved for public release.

Compliance with the subject Air Comm Corporation Service Kit within the compliance time frame stated above is required to maintain any ADIU P/N: 429-005-005-117 under warranty or exchange program considerations in effect beyond April 30th, 2020.

Following customer feedback of initial bulletin release, **Revision A** of this Technical Bulletin provides additional information for helicopters that have the wiring changes already incorporated.

APPROVAL:

Refer to the Air Comm Corporation Service Kit SK-429EC-800, Revision C.

CONTACT INFO:

For any questions regarding this bulletin, please contact:

Bell Product Support Engineering
Tel: 1-450-437-2862 / 1-800-363-8023 / productsupport@bellflight.com

MANPOWER:

Man-hours required for accomplishment may be estimated by referring to the subject Air Comm Corporation Service Kit instructions.

WARRANTY:

There is no warranty credit applicable for parts or labor associated with this bulletin.

MATERIAL:

Refer to the subject Air Comm Corporation Service Kit.

SPECIAL TOOLS:

Refer to the subject Air Comm Corporation Service Kit.

WEIGHT AND BALANCE:

Not affected.

ELECTRICAL LOAD DATA:

Not affected.

REFERENCES:

SK-429EC-800 Revision C – Air Comm Corporation Service kit.

PUBLICATIONS AFFECTED:

Refer to the subject Air Comm Corporation Service Kit.

ACCOMPLISHMENT INSTRUCTIONS:

-NOTE-

The Air Comm Service Kit SK-429EC-800 Rev. C includes changes to the wiring and grounds that may have already been incorporated on some helicopters. For those helicopters, only the diode needs to be installed.

1. Comply with the Air Comm Corporation Service Kit **SK-429EC-800 Rev. C**

2. Make an entry in the helicopter logbook and historical service records indicating compliance with this Technical Bulletin/Service Kit.

3. Send an email to ProductSupport@BellFlight.com with the following subject topic:

   "429 (Serial Number and Registration Marking) *TB 429-19-61/ SK-429EC-800, Rev. C complied* with "

ACC Air Comm Corporation

Service Kit

Title: Bell 429 Air Conditioner Compressor Clutch Re-wire

Date: April 16, 2019

Applicability: Bell Helicopter Model 429 Equipped with the Air Comm Corporation 429EC-200 and -202 Air Conditioning Systems

Reference: FAA / STC # SR00693DE, Bell Helicopter 429 Air Conditioning System

Discussion:
This letter explains how to modify the wiring of the compressor clutch on the air conditioning system. The wiring change enhances the grounding to the airframe to increase reliability and system performance. This wiring change also adds a diode for improved noise suppression.

Approval:
The information provided within this document is based on FAA approved data.

Weight & Balance:
The weight change due to the installation of these parts would be negligible and so no adjustment to the weight and balance of the aircraft is necessary.

Bill of Materials:
(wire available upon request)

Item	Part Number	Description	Quantity
1	ES55053-1	Terminal, 90 deg.	2
2	M39029/56-348	Contact, Socket, 22 ga.	3
3	M39029/56-351	Contact, Socket, 20 ga.	1
4	M39029/58-360	Contact, Pin, 22 ga.	3
5	M39029/58-363	Contact, Pin, 20 ga.	1
6	MS25036-102	Terminal, Ring, 22ga., #6 stud	1
7	MS25036-103	Terminal, Ring, 22ga., #10 stud	2
8	M81714/65-16-2	Splice, sealed, 2 wire	2
9	1N5408	Diode	1

Revision	Issue Date	Inserted By	Approved by	Description of Changes
NC	7/13/15	JMB	KP	Initial Release
A	10/9/15	JMB	KP	Deleted table 4. Moved wire in table 4 to -12 harness. Changed wire lengths table 2. Added instructions and annotations for installation of new wires.
B	12/2/15	JMB	KDP	Changed splice from single wire to 2 wire. Corrected splice p/n from M81714/65-16 to M81714/65-16-2
C	4/16/19	RTD	MFK	Added 1N5408 diode. ECO 19-174.

1575 West 124th Avenue, Ste. 210, Westminster, CO 80234 • 303-440-4075
www.aircommcorp.com • info@aircommcorp.com

1.0 Work Instructions

CAUTION
Disconnect the aircraft battery and external power prior to starting work.

1.1 Modify the existing harnesses by adding the wires shown in the tables below. It is acceptable to route the wires alongside the existing harness. The wire lengths shown in the table below are provided to ensure adequate lengths but are not necessarily the installed length.

Table 1. add to 429EC-8006-10 Wire Harness

Wire number	From	Pos	Contact	To	Pos	Contact	Gage	Wire Length
ACCB50B22	(3940A4P1)	P	M39029/56-351	C/B "Comp" Load	-	MS25036-102	22	15"

Table 2. add to 429EC-8006-12 Wire Harness

Wire number	From	Pos	Contact	To	Pos	Contact	Gage	Wire Length
ACCB55B22	Doghouse (ACP4)	7	M39029/58-360	Pressure Switch	-	ES55053-1	22	60"
ACCB56B22	Doghouse (ACP4)	10	M39029/58-360	Clutch Splice (-)	-	M81714/65-16-2	22	84"
ACCB57B22	Doghouse (ACP4)	11	M39029/58-360	Clutch Splice (-)	-	M81714/65-16-2	22	84"
ACCB54B22	Pressure Switch	-	ES55053-1	Clutch Splice (+)	-	M81714/65-16-2	22	102"
1N5408 Diode	Clutch Splice (+)	-	M81714/65-16-2	Clutch Splice (-)	-	M81714/65-16-2	-	-

Table 3. add to 429EC-8006-14 Wire Harness

Wire number	From	Pos	Contact	To	Pos	Contact	Gage	Wire Length
ACCB51B22	Doghouse (ACJ4)	7	M39029/56-348	(3940A4J1)	P	M39029/58-363	22	180"
ACCB52B22N	Doghouse (ACJ4)	10	M39029/56-348	Ground Stud in Cabin GND3	-	MS25036-103	22	180"
ACCB53B22N	Doghouse (ACJ4)	11	M39029/56-348	Ground Stud in Cabin GND3	-	MS25036-103	22	180"

1575 West 124th Avenue, Ste. 210, Westminster, CO 80234 • 303-440-4075
www.aircommcorp.com • info@aircommcorp.com

1.2 Modify the -10 harness using the wire in table 1 above.
1.3 Modify the -12 harness assembly per table 2 above and the highlighted connections below. The new wires will need to route through the wire braiding between the connector and the strain relief clamps and then tied alongside the existing harness.

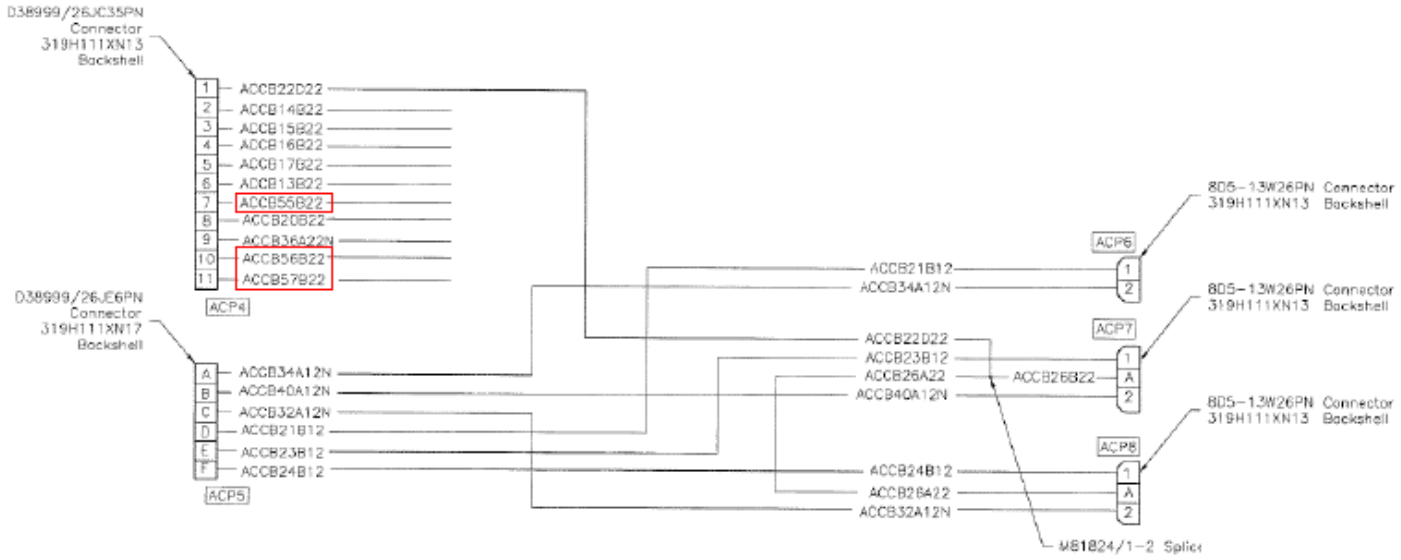

-12 Assy. Harness (ACP4 & ACP5)

NOTE: The schematic above depicts only the connector portion of the -12 harness. The newly added wire ACCB54B22 routed from the clutch splice to the pressure switch terminals is not shown above.

1575 West 124th Avenue, Ste. 210, Westminster, CO 80234 • 303-440-4075
www.aircommcorp.com • info@aircommcorp.com

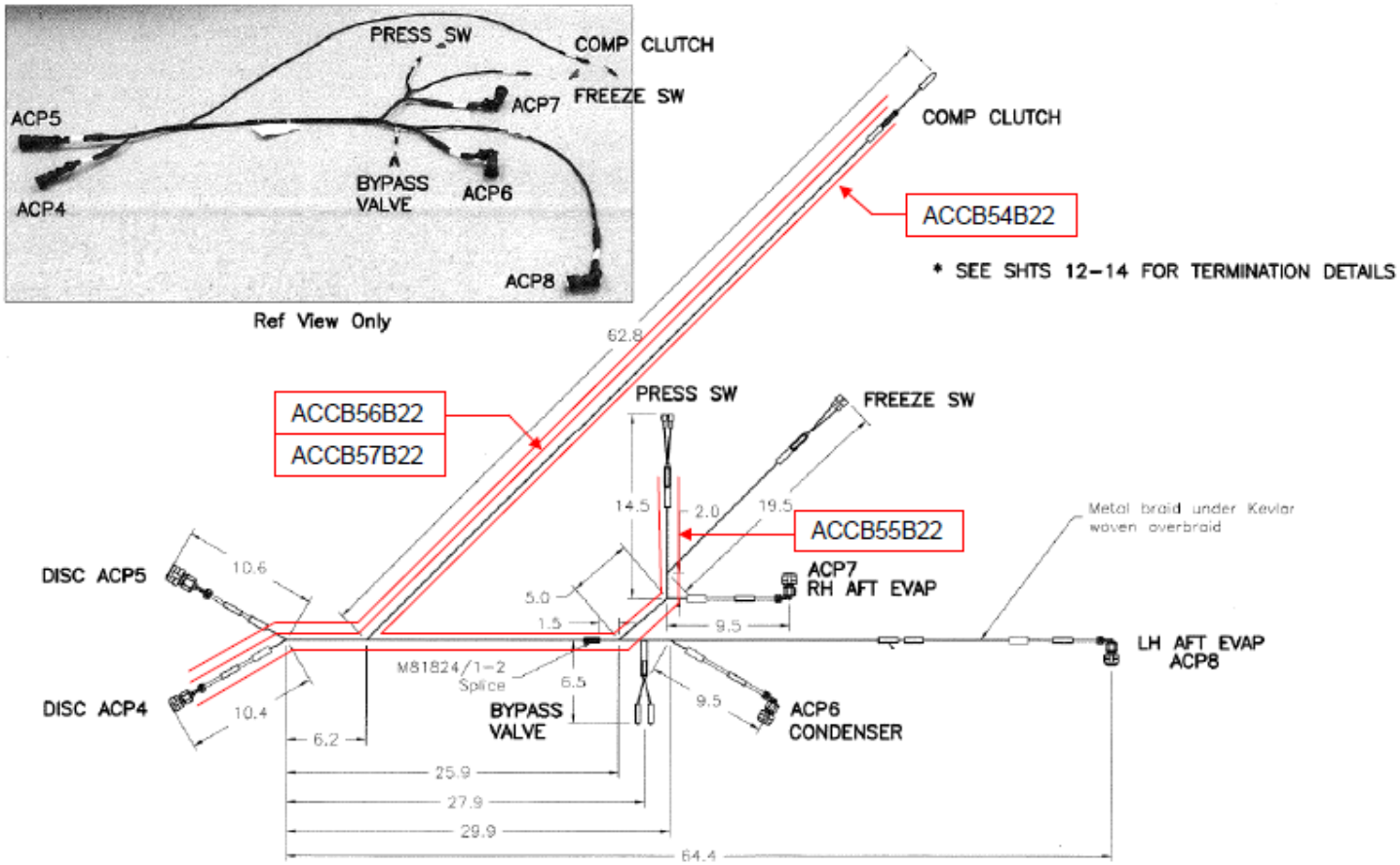

-12 Assy, Harness

1575 West 124th Avenue, Ste. 210, Westminster, CO 80234 • 303-440-4075
www.aircommcorp.com • info@aircommcorp.com

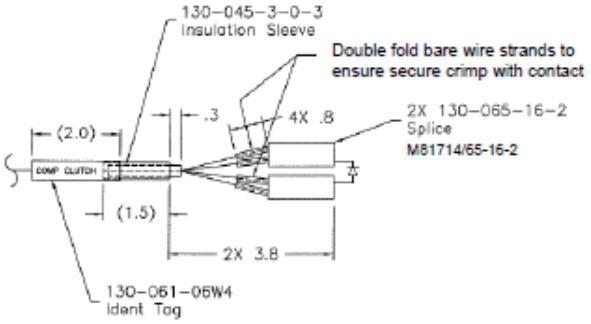

-12 COMP CLUTCH DETAIL

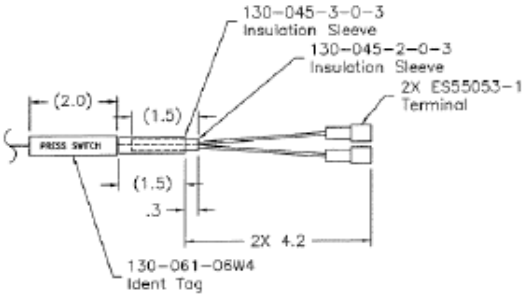

-12 PRESSURE SWITCH DETAIL

1.4 For -12 harness install 1N5408 diode into splices as shown above in "COMP CLUTCH DETAIL" and orient per schematic on last page of this document.

1.5 Modify the -14 harness assembly per table 3 above and the highlighted connections below. Leave one end un-terminated until the wires are routed in the aircraft and the final length is determined.

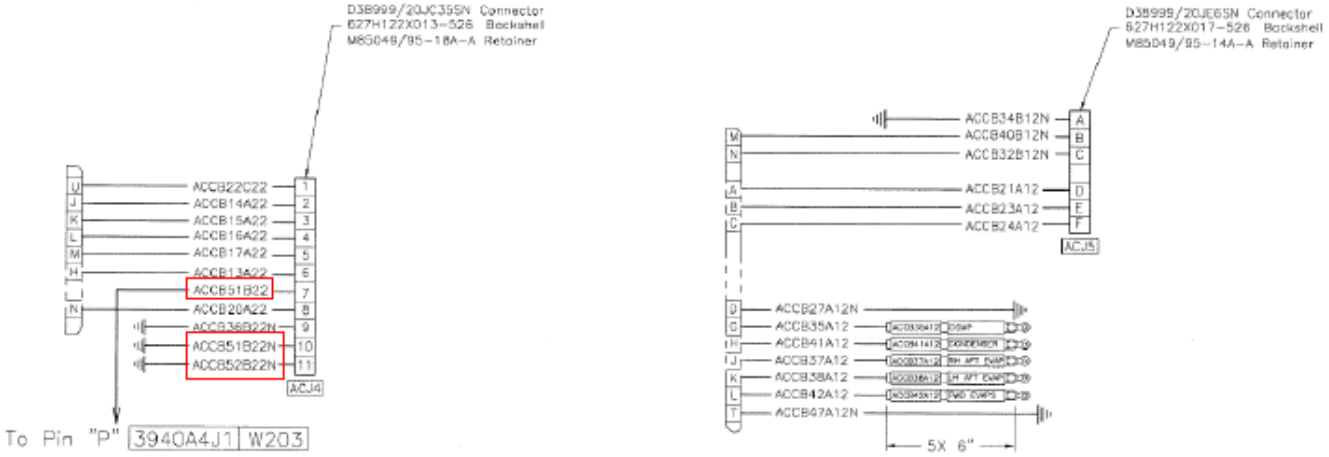

-14 Assy, Wire Harness, Relay Panel

1575 West 124th Avenue, Ste. 210, Westminster, CO 80234 • 303-440-4075
www.aircommcorp.com • info@aircommcorp.com
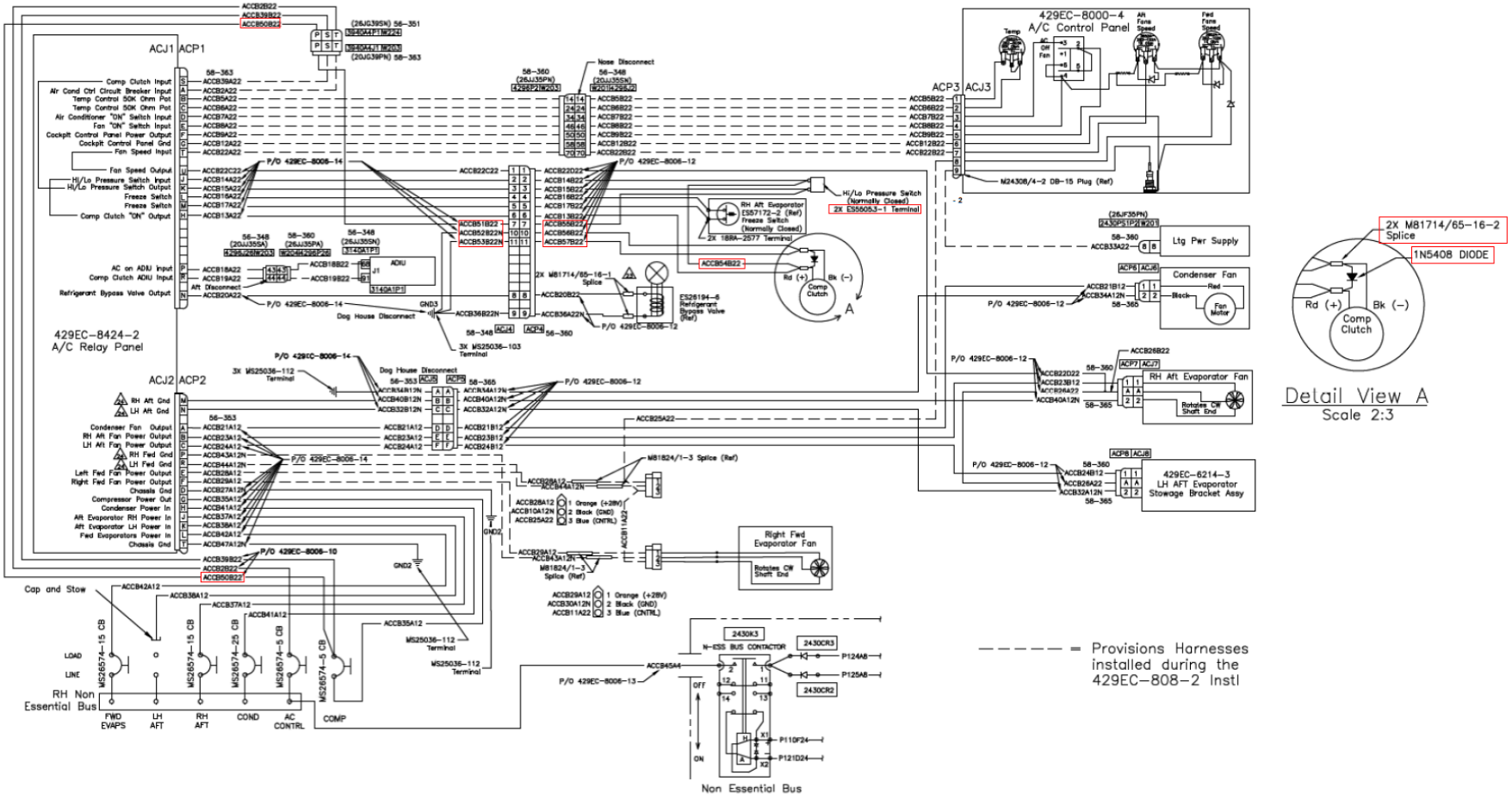
1.6 Install the wire & harness assemblies per the schematic below. Affected wires are highlighted.