A Textron Company

TECHNICAL BULLETIN **505-18-10**

PSL 7000000255

6 September 2018
Revision A, 19 November 2018
Revision B, 29 October 2025

MODEL AFFECTED: **505**

SUBJECT: **DOOR LOCK RETROFIT KIT**

HELICOPTERS AFFECTED: **Serial numbers 65011 through 65038, 65040 through 65046, 65048 and 65049.**

[Serial number 65039, 65047, and 65050 through 65169 will have the intent of this bulletin accomplished prior to delivery.]

COMPLIANCE: At customer's option.

DESCRIPTION:

The purpose of **Revision B** of this bulletin is to correct the **HELICOPTERS AFFECTED** section.
The purpose of **Revision A** of this bulletin is to correct the labor entitlement amount.

This Technical Bulletin provides instructions to retrofit cabin doors SLS-030-110-001/-002 with latest production door locks. The change offers a door opening mechanism that can be opened from the inside when locked. Applicability of this bulletin to any spare part shall be determined prior to its installation on an affected helicopter.

APPROVAL:

The engineering design aspects of this bulletin are Transport Canada Civil Aviation (TCCA) approved.

CONTACT INFO:

For any questions regarding this bulletin, please contact:

Bell Helicopter Product Support Engineering - Light Helicopters
Tel: 450-437-2862 / 1-800-363-8023 / pselight@bellflight.com

MANPOWER:

Approximately 10 man-hours are required to complete this bulletin. This estimate is based on hands-on time and may vary with personnel and facilities available.

WARRANTY:

Owners / Operators of Bell Helicopters who comply with the instructions in this Bulletin will be eligible to receive non prorated replacement parts as applicable, listed in the bulletin. Bell Helicopter has recently introduced enhancements to the VISTA Portal which allocates specific warranty entitlement for an aircraft by serial number. The Product Service Letter (PSL) number which will be listed below the bulletin number on the introduction page is going to be a required field when submitting a claim for replacement parts, labor, and/or freight. If you receive an ASB or TB that does not have a PSL number, then there is no warranty entitlement for that bulletin.

Labor entitlement: Yes $850.00 USD

To receive parts, labor, and/ freight under warranty:

- Comply with the instructions contained in this Bulletin no later than the applicable date in the “compliance section”.
- If there is a PSL number identified in the bulletin you will be required to enter this PSL number which will validate warranty entitlement for the selected aircraft. Please ensure that you use the Bulletin tab on the warranty section in VISTA to file your claim.

NOTE: Customers who fail to comply with the instructions in this Bulletin before **October, 16th, 2019** will not be eligible for the special warranty listed above.

MATERIAL:

Required Material:
The following material is required for the accomplishment of this bulletin and may be obtained through your Bell Supply Center.

The following material is required for the accomplishment of the bulletin and can be purchased as a kit under part number **SLS-704-110-001**.

Part Number	Nomenclature	Qty (Note)
140-001-9	Washer	8
20912-203	Lock Assy	2
MS20470AD4-4-5	Rivet	8
MS24665-90	Cotter Pin	4
MS27039C0809	Screw	4
MS35214-22	Screw	8
NAS1352C02-3	Head Cap Screw	8
SLS-030-110-247	Cable Clips	6
SLS-030-110-251	Actuator Fitting	2
SLS-030-110-253	Lock Fitting	2
SLS-030-110-255	L/H Latch Actuator Outer Rod	1
SLS-030-110-256	R/H Latch Actuator Outer Rod	1
SLS-030-110-257	L/H Latch Inner Rod	1
SLS-030-110-258	R/H Latch Inner Rod	1
SLS-030-110-267	Outboard Skin Lock Doubler	2
SLS-030-110-283	Cam	2
SLS-030-110-293	Interior Handle	4
NAS9307M-4-03	Blind Rivet	6
4592-7	Key	2 (1)
NAS1149CN832R	Washer	4

NOTE 1: A spare key is provided.

Consumable Material:
The following material is required to accomplish this bulletin, but may not require ordering, depending on the operator's consumable material stock levels. This material may be obtained through your Bell Supply Center.

The following material is required for the accomplishment of the bulletin and can be purchased as a kit under part number **SLS-704-110-003**.

Part Number	Nomenclature	Qty (Note)	Reference *
2010-12481-01	Sealant	1 Pt (1)	C-251
2010-05846-00	Loctite 083	50 CC (1)(2)	C-320

* C-XXX numbers refer to the consumables list in the BHT-ALL-SPM, Standard Practices Manual

NOTES:

1. The quantity indicated is the format the product is delivered in. Actual quantity required to accomplish the instructions in this bulletin may be less.
2. The Loctite specification required is ASTM D5363, Group 01, Class 4, Grade 2.

SPECIAL TOOLS:

None required.

WEIGHT AND BALANCE:

Not affected.

ELECTRICAL LOAD DATA:

Not affected.

REFERENCES:

BHT-505-IPC, Illustrated Parts Catalog
BHT-505-MM, Maintenance Manual
BHT-ALL-SPM, Standard Practices Manual

PUBLICATIONS AFFECTED:

BHT-505-IPC, Illustrated Parts Catalog
BHT-505-MM, Maintenance Manual

ACCOMPLISHMENT INSTRUCTIONS:

1. Prepare the helicopter for maintenance.

2. Remove the left crew door (DMC-505-A-52-10-01-00A-520A-A) and right crew door (DMC-505-A-52-10-02-00A-520A-A) (BHT-505-MM, Maintenance Manual).

3. Prepare the left crew door (1, Figure 1) for the modification.

4. Prepare a clean work surface for the crew door modification.

-NOTE-

The screws (4, View B), washers (5), and washers (18, View E) are the only removeable components installed on the inner door panel (6) that will be re-used.

5. Remove inner door panel (6, View B) as follows:

-NOTE-

The crew door exterior handle may be difficult to remove due to the Loctite (C-320) requirement during installation. The workaid shown in Figure 2 is recommended to facilitate the removal.

a. Remove and retain the exterior handle (2, View A) from the actuator rod (3).

b. Remove and retain the screws (4, View B) and the washers (5) from the inner door panel (6).

CAUTION

The actuator rod (3, View B) must slide forward and out of the outer handle seal (7) to remove the inner door panel (6). Otherwise the outer handle seal (7) will pop out of place.
The inner door panel (6, View B) is only to be distanced from the crew door (1) far enough to be able to reach inside the door to remove the cable assembly (8, View C) from the lower four clips (9).

c. Slide the inner door panel (6, View B) forward until the actuator rod (3 is removed from the outer handle seal (7, View A).

d. Disconnect the cable assembly (8, View C) from the four lower clips (9).

6. Disconnect the cable assembly (8) from the inner door panel (6) as follows:

   a. Remove and discard the bolts (10, View D), washer (11), and nut (12).

-NOTE-

For ease of reassembly¸ label the location of the individual cables (8, View D) on the cable clip (13). Example: 1, 2, 3.

   b. Remove the cable assembly (8) from the cable clip (13).

   c. Rotate the actuator fitting (14) until the “cutout” aligns with the cable assembly (8).

   d. Disconnect the cable assembly (8) from the actuator fitting (14).

-NOTE-

There is an opening on the inner door panel (6, View E, Detail F) to assist the removal of the interior door handle (15) hardware.

7. Using a pin punch, remove and discard the roll pin (16, Detail F) from the actuator rod (3).

8. Remove the interior door handle (15) by pulling on it outboard.

9. Discard the interior door handles (15).

10. Remove and discard cotter pin (17, View E).

11. Remove washers (18), actuator fitting (14) and actuator rod (3) by sliding the actuator rod (3) out of the inner door panel (6).

   a. Retain washers (18).

   b. Discard the actuator rod (3).

   c. Discard the actuator fitting (14).

12. Remove and discard nut (19, Detail G).

13. Remove and discard lock assembly (20).

14. Remove and discard the rubber sealing washer (21) from the exterior of the door (1). It may be slightly covered with paint.

-NOTE-

Some aircraft may already have the new doubler PN SLS-030-110-267 (24, Detail H) installed.

15. Examine the currently installed doubler (23, View H) as follows:

    a. If the currently installed doubler resembles item 23 in detail H, proceed to step 15.

    b. If the currently installed doubler resembles item 24 which has a flat portion on the top, disregard steps 15 to 18 and continue from step 19 onward.

16. Remove fastener (22, View G) (BHT-ALL-SRM).

17. Remove and discard doubler (23).

18. Clean area of all foreign object.

19. Install the doubler SLS-030-110-267 (24, Detail I) as follows:

    a. Clean the doubler (24, Detail I) and the faying surface on the door (1) with a with a clean cloth (C-516) moistened with aliphatic naphtha (C-305).

-NOTE-

The doubler (24) SLS-030-110-267 is to be installed with the flat section facing up.

    b. Apply sealant (C-251) to the faying surfaces of the doubler (24) and install on the crew door (1) with fastener MS20470AD4-4-5 (25).

    c. Remove excess sealant.

20. Install the lock assembly 20912-203 (29) and cam SLS-030-110-283 (30) as follows:

CAUTION

The interior locking mechanism of the lock assembly. (29) will be free to fall out when the nut (26) is removed.

-NOTE-

The lock assembly (29) will have the cam (27) already installed. It will not be used for the installation and must be removed

a. Remove nut (26), cam 3187-3 (27), and nut (28) from the lock assembly (29).

b. Discard cam (27).

c. Apply sealant on the faying surface of the lock assembly (29) which contacts the exterior of the crew door (1).

-NOTE-

Opening on the lock assembly (29) for the pin on the cam (30) must be on the bottom when installed.

d. Install the lock assembly (29) on the crew door (1)

e. Apply Loctite (C-320) on the external threads of the lock assembly (29) near the doubler (24) only.

f. Install the nut (28) on the lock assembly (29).

g. Torque the nut (28) 10 to 20 inch-pounds (1.13 to 2.26 Nm).

h. Temporarily install cam (30) and nut (26) on the lock assembly (29).

i. Torque nut (26) 10 to 20 inch-pounds (1.13 to 2.26 Nm).

21. Clean the outer actuator rod SLS-030-110-255 left, SLS-030-110-256 right (31, View J) and actuator fitting SLS-030-110-251 (32) with a clean cloth (C-516) moistened with aliphatic naphtha (C-305).

-NOTE-

The end of the outer actuator rod (31, View J) which has cotter pin holes must be directed FWD when installed on the inner door panel (6).

The cable insertion hole of the actuator fitting (32, View N) must be directed inboard when installed.

22. Install the outer actuator rod SLS-030-110-255 left, SLS-030-110-256 right (31, View J), washers (18), and actuator fitting (32) on the inner panel (6).

23. Install cotter pin MS24665-90 (33) as shown in section L-L.

24. Actuator fitting (32, View J) installation:

    a. Place the actuator fitting (32) one width to the side of its installation location on the outer actuator rod (31).

    b. Apply sealant (C-251) to the faying surfaces on the outer actuator rod (31, Detail M).

    c. Slide the actuator fitting (32) in place.

    d. Apply Loctite (C-320) to threads of screw MS35214-22 (34, View J).

    e. Install screw MS35214-22 (34) and washer 140-001-9 (35) on the actuator fitting (32) and outer actuator rod (31).

    f. Remove excess sealant.

25. Attach the cable assembly (8, View N) to the actuator fitting (32).

26. Interior handle SLS-030-110-293 (36, View K) installation.

-NOTE-

The cutout on the outer actuator rod (31, Detail M) and actuator fitting (32) must be pointing outboard when installing the interior handle (36, View K).

a. Clean the interior handles (36, View K) with a clean cloth (C-516) moistened with Aliphatic naphtha (C-305).

b. Apply to sealant (C-251) to the faying surface of the interior handle (36).

-NOTE-

There is an opening on the inner door panel (6, View K) to facilitate the removal/installation of the interior door handle (36).

c. Install the interior handles (36) onto the outer actuator rod (31) by applying enough force for the handle to snap into position.

d. Apply Loctite (C-320) to the threads of head cap screw NAS1352C02-3 (37) and install.

27. Attach the cable assembly (8, View N) to the cable clip (13).

28. Clean the inner actuator rod SLS-030-110-257 left, SLS-030-110-258 right (38, View J) with a clean cloth (C-516) moistened with aliphatic naphtha (C-305).

29. Install the inner actuator rod (38) into the outer actuator rod (31).

30. Clean the lock fitting SLS-030-110-253 (39) with a clean cloth (C-516) moistened with aliphatic naphtha (C-305).

31. Apply sealant (C-251) to the faying surface of the lock fitting (39).

32. Apply Loctite (C-320) to the threads of screw MS27039C0809 (40).

33. Install the lock fitting (39) on inner actuator rod (38) with screw (40) and washer NAS1149CN832R (41).

34. Ensure all foreign objects are removed from inside of the crew door (1, View A).

35. Verify the Cam (30, Detail O) and lock fitting (39) engagement as follows:

    a. Install the inner door panel (6, View B).

-NOTE-

Attaching the cable assembly (8) to the clips (9) is only necessary during the final assembly.

Screw (4) and washer (5) do not all need to be installed for the verifications.

Loctite and the final torque on the exterior handle (2) is only necessary during the final assembly.

b. Make sure the lock assembly (29,Detail I) is in the unlocked position (key turned fully counterclockwise).

c. Place inner door panel (6, View B) on the crew door (1) and slightly forward of the opening.

d. Attach the cable assembly (8, View C) to clips (9).

e. Slide the inner door panel (6) aft into the outer handle seal (7, View A).

f. Install screws (4, View B) and washers (5).

g. Torque the screws (4) 12 to 15 inch-pounds (1.35 to 1.70 Nm).

h. Apply Loctite (C-320) onto threads of the exterior door handle (2, View A).

i. Install exterior door handle (2).

j. Torque the exterior handle (2) until the shank bottoms out.

-NOTE-

The door lock mechanism is designed to induce a positive pressure from the cam (30, Section O-O) onto the lock fitting (39) when placed in the locked position to prevent movement of the exterior handle (2, View A).

k. Rotate the lock assembly (28, Detail I) into the locked position with the key PN 4592-7 while simultaneously applying a slight upwards pressure on the exterior handle (2, View A).

l. If found acceptable with no excessive forcing required, proceed to step 36. If excessive force is required, adjust as follows:

(1) Remove the inner door panel (6, View B) as per step 5.

(2) Remove nut (26, Detail I).

(3) Remove cam (30).

CAUTION

Removing excessive material will cause the exterior handle (2, View A) to be loose when placed in the locked position.

(4) Remove material from the indicated surfaces on the cam (30, Detail O).

(5) Install cam (30, Detail I).

(6) Install nut (26).

(7) Torque nut (29) 10 to 20 inch-pounds (1.13 to 2.26 Nm).

(8) Repeat step 35 until found acceptable.

36. Verify the latch bolt (42, Detail Q) recession as follows:

a. Verify each latch bolt (42, Section R-R) recesses 0.080 to 0.100 inch (2.03 to 2.54 mm) inside the latch housing (43) by operating interior handle (36, View P) and exterior handle (2, View A) individually to their full unlatched position.

b. If all latch bolts (42, Section R-R) are within limits, proceed as follows:

(1) Remove the inner door panel (6, View B) as per step 5 to 5.d.

(2) Proceed to step 37.

c. If criteria is not met, adjust the discrepant latch bolt (42) as follows:

(1) Remove the inner door panel (6, View B) as per step 5 to 5.d.

(2) If required, remove the upper latch as follows:

(a) Remove the cable assembly (8, View P) for the upper latch from the two clips (44).

(b) Remove the screws (45, Detail Q) and the washers (46).

(c) Carefully pull the upper latch housing (43) outboard enough to disconnect the cable assembly (8) from the cable attach clip (47) and latch bolt (42).

(d) Proceed to step 36.d.

(3) If required, remove the mid and/or lower latch as follows:

(a) If required, remove the cable assembly (8, View P) for the lower latch from the clips (54).

(b) Remove the screws (45, Detail Q) and the washers (46).

(c) Carefully pull the upper latch housing (43) outboard enough to disconnect the cable assembly (8) from the cable attach clip (47) and latch bolt (42).

(d) Disconnect the cable assembly (8, Detail P) from the cable attach clip (47) and latch bolt (42).

(e) Proceed to step 36.d.

d. Remove rivet (48, Detail Q) (BHT-ALL-SRM).

e. Remove and retain screw (49), washer (50), and nut (51).

f. Remove and discard cable attach clip (47).

g. Temporarily install the new cable attach clip SLS-030-110-247 (52) with the screw (49), washers (50), and nut (51).

-NOTE-

Make sure the cable assembly (8) is not twisted.

h. Attach cable assembly (8) to latch bolt (42).

i. Attach cable assembly (8) to cable attach clip (52).

j. Adjust position of the new cable attach clip (52) with screw (49) and nut (51) until 0.080 to 0.100 inch (2.032 to 2.54 mm) (Section R-R) recession is achieved.

k. Disconnect the cable assembly (8) from the cable attach clip (52) and latch bolt (42).

l. Transfer the fastener hole from the latch housing (43) into the cable attach clip (52).

m. Remove and retain the screw (49), washers (50), nut (51), and the cable attach clip (52).

n. Deburr the fastener hole.

o. Remove all FOD and clean the latch housing and cable attach clip (52) with a clean cloth (C-516) moist with Aliphatic naphtha (C-305).

p. Apply sealant (C-251) to the faying surface of the attach clip (52).

q. Install the cable attach clip (52) with screw (49), washers (50), and nut (51).

-NOTE-

Orientation of rivet head (53) must be orientated as shown in Detail Q.

r. Install rivet NAS9307M-4-03 (53) to permanently fasten components together.

-NOTE-

Make sure the cable assembly (8) is not twisted.

s. Attach cable assembly (8) to latch bolt (42).

t. Attach cable assembly (8) to cable attach clip (52).

u. Position the latch housing (43) on the crew door (1) for installation.

v. Apply sealant (C-251) on the threads of the screws (45).

w. Install the screws (45) and washers (46).

CAUTION

Do not excessively deform or damage washer (45).

x. Torque screw (45) until a slight bulge or deformation in washer (46) is visible.

y. Clean excess sealant.

z. Attach cable assembly (8, View P) to the clip (44 and 54), if required.

Final Assembly

37. Remove nut (26, Detail I).

38. Apply Loctite (C-320) on threads of lock assembly (29) near the cam (30) only.

39. Install nut (26).

40. Torque nut (26) 10 to 20 inch-pounds (1.13 to 2.26 Nm).

41. Install inner door panel (6, View B) as per Step 35, a to 35, j.

42. Apply a bead of sealant (C-251) around the contour of lock assembly (29) on the outboard side of the door (1, Detail I).

43. Repeat steps 3 to 42 for the right crew door.

44. Install the left crew door (1) DMC-505-A-52-10-01-00A-720A-A and right crew door (1) DMC-505-A-52-10-02-00A-720A-A.

45. Make an entry in the helicopter logbook and historical service records indicating compliance with this Technical Bulletin.

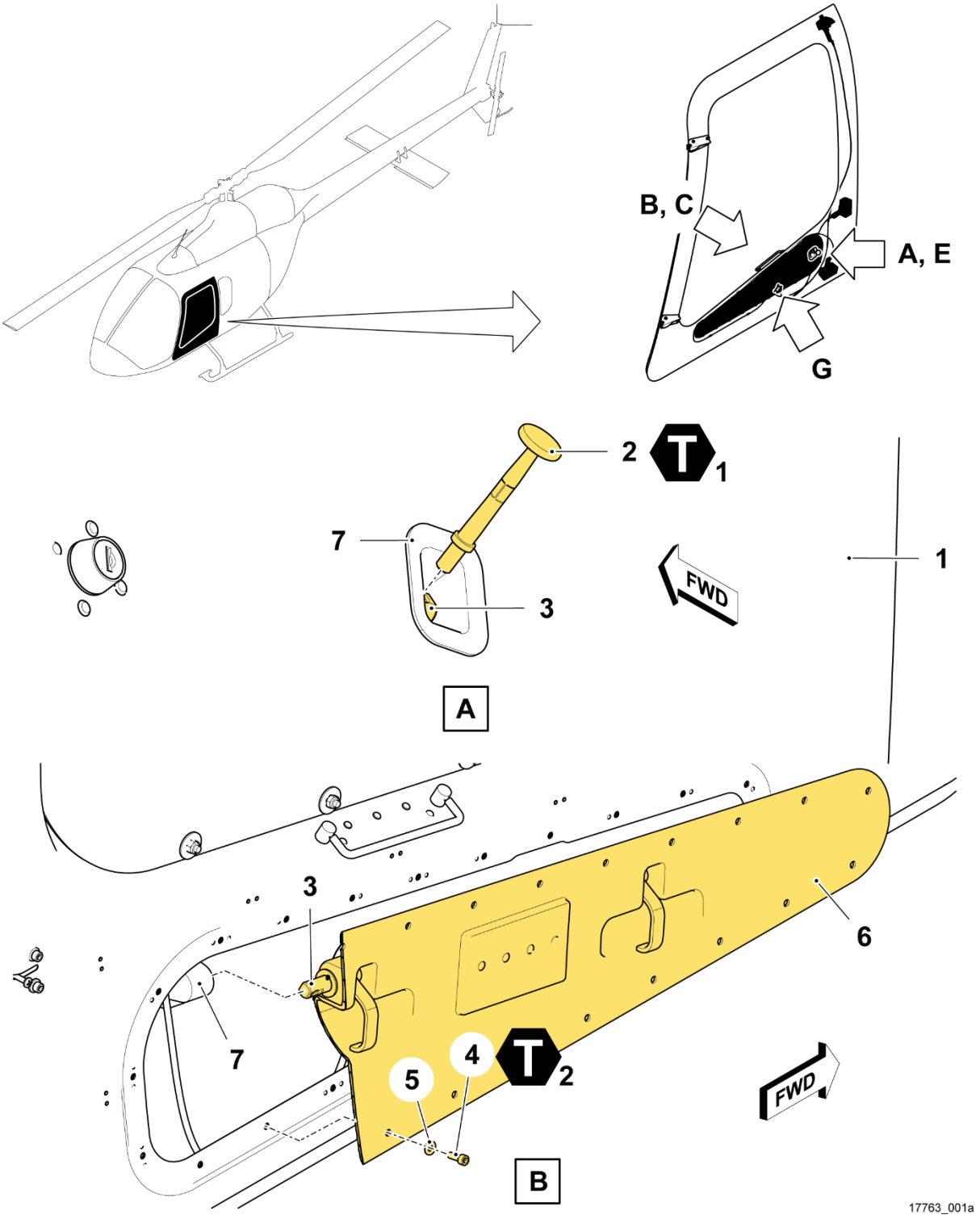

FIGURE 1 – Crew door lock retrofit (Sheet 1 of 10)

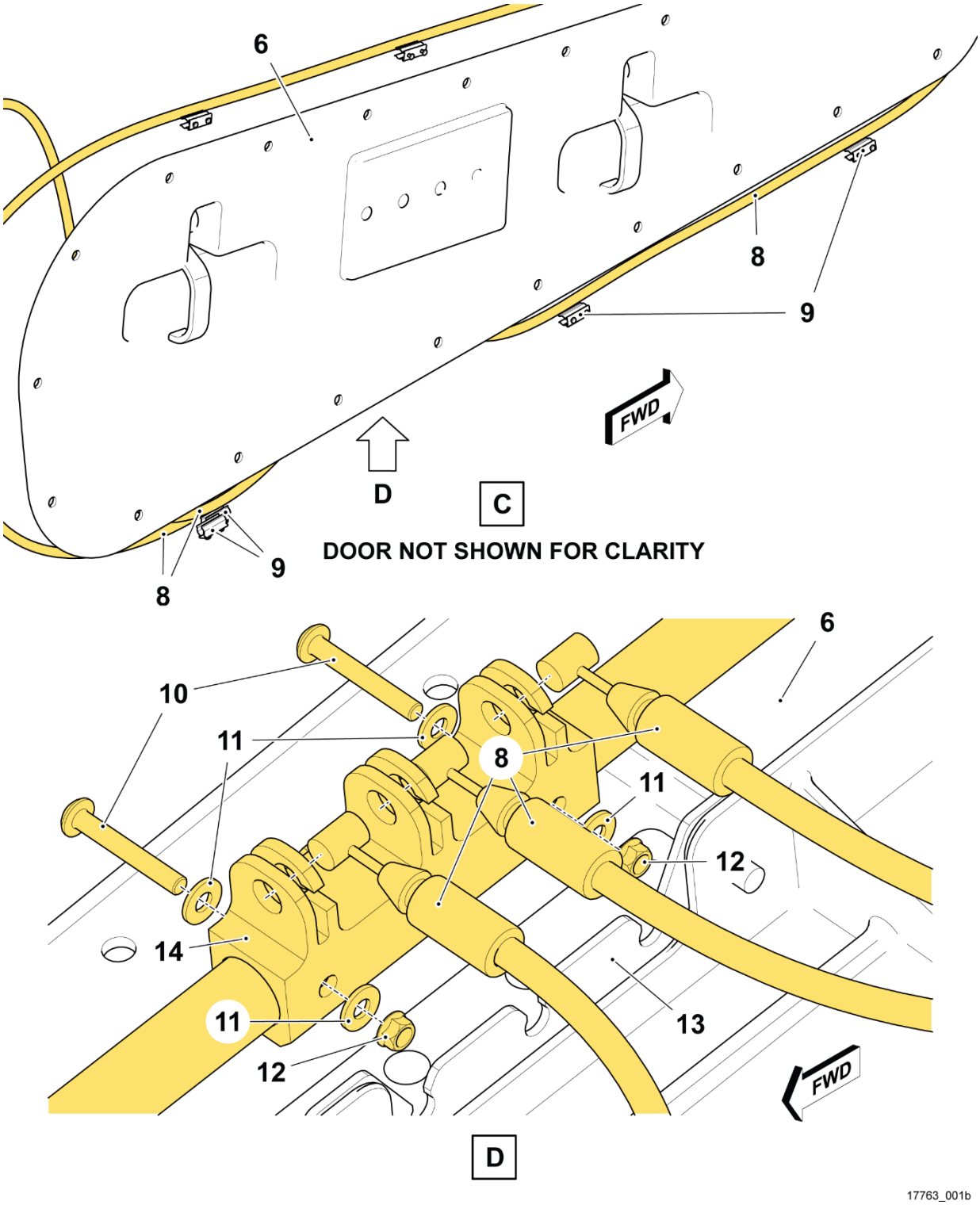

FIGURE 1 – Crew door lock retrofit (Sheet 2 of 10)

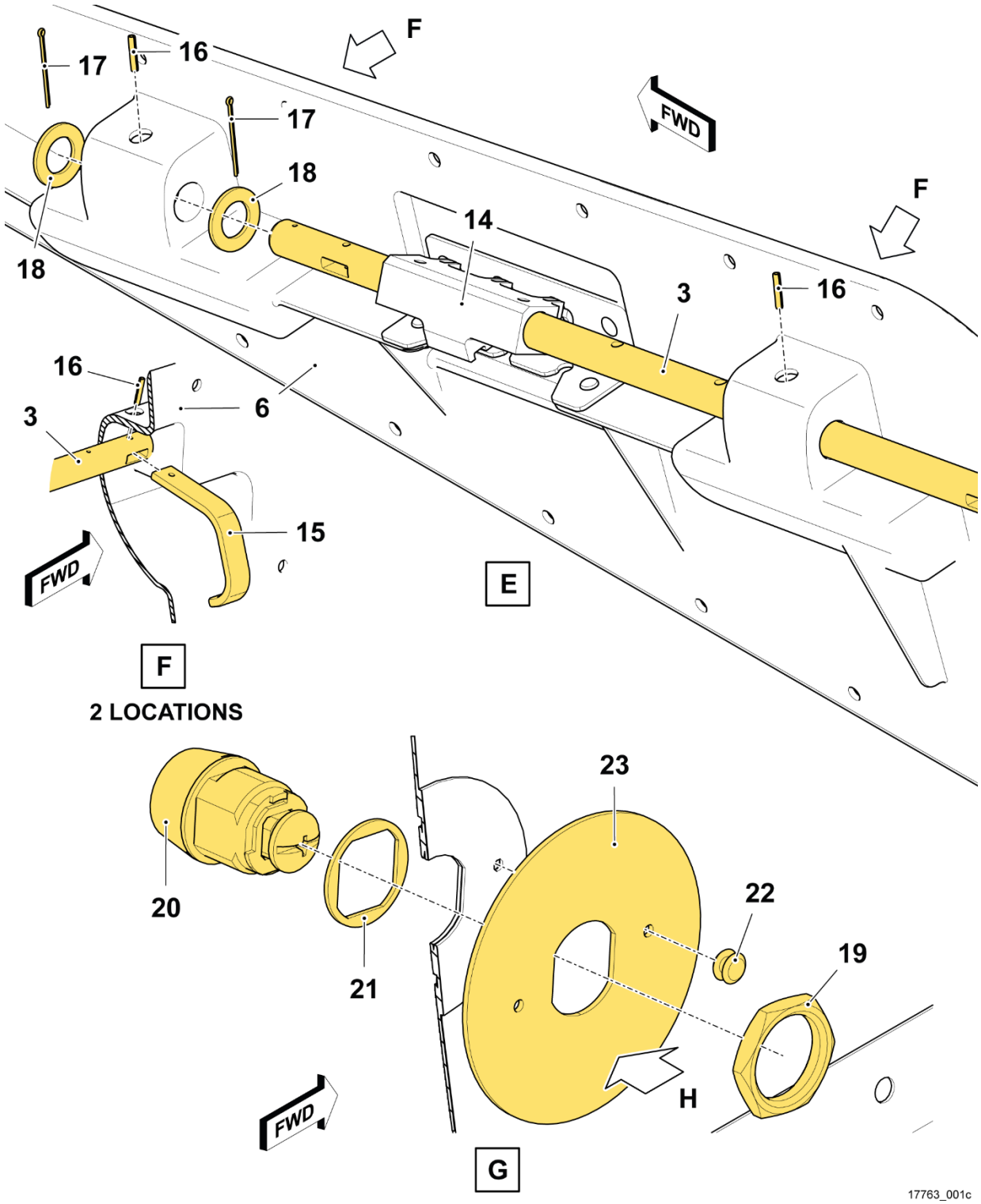

FIGURE 1 – Crew door lock retrofit (Sheet 3 of 10)

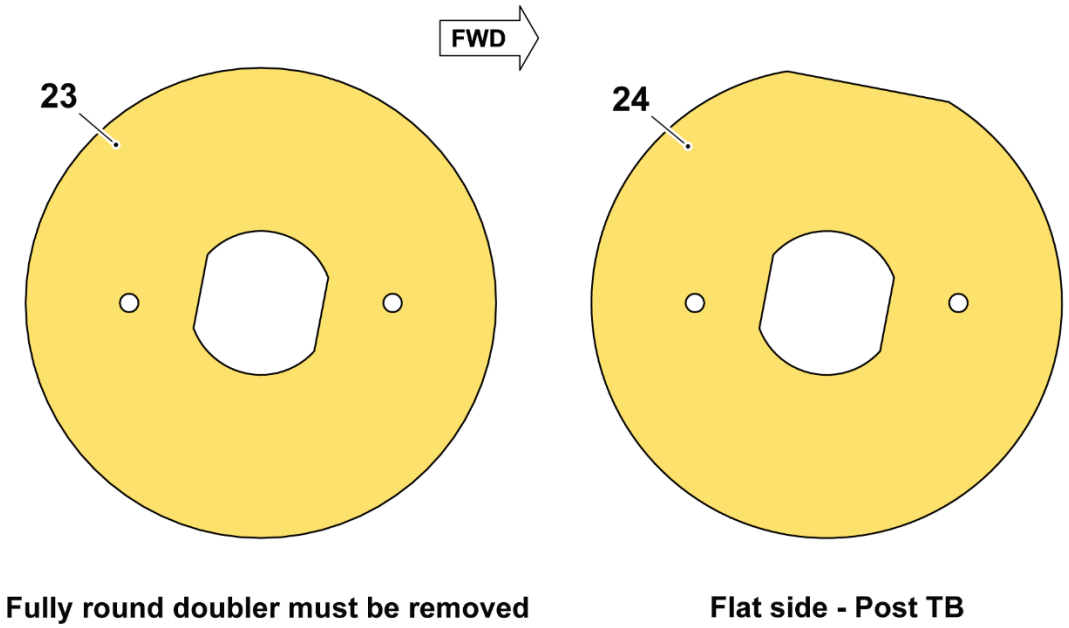

H

17763_001d

FIGURE 1 – Crew door lock retrofit (Sheet 4 of 10)

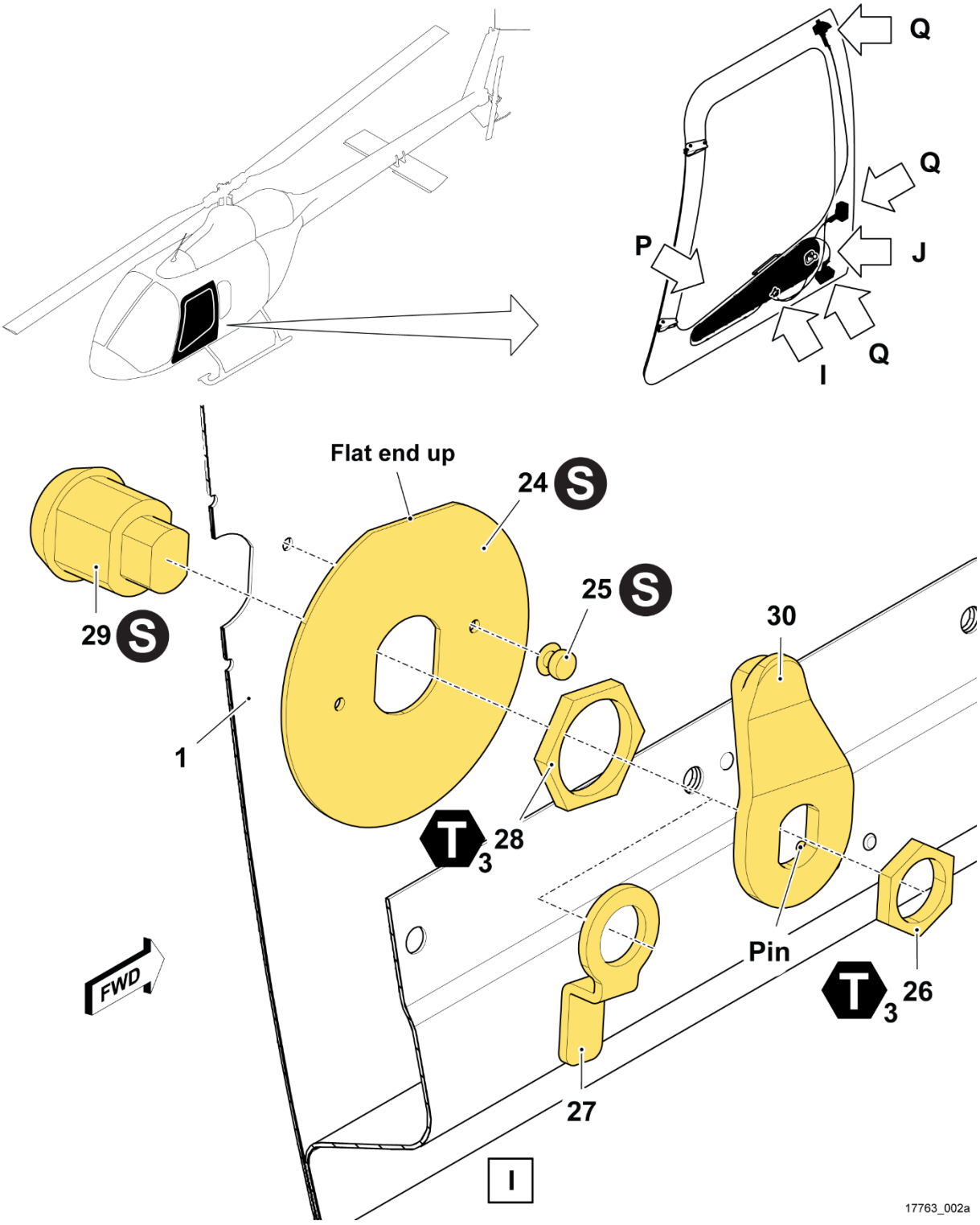

FIGURE 1 – Crew door lock retrofit (Sheet 5 of 10)

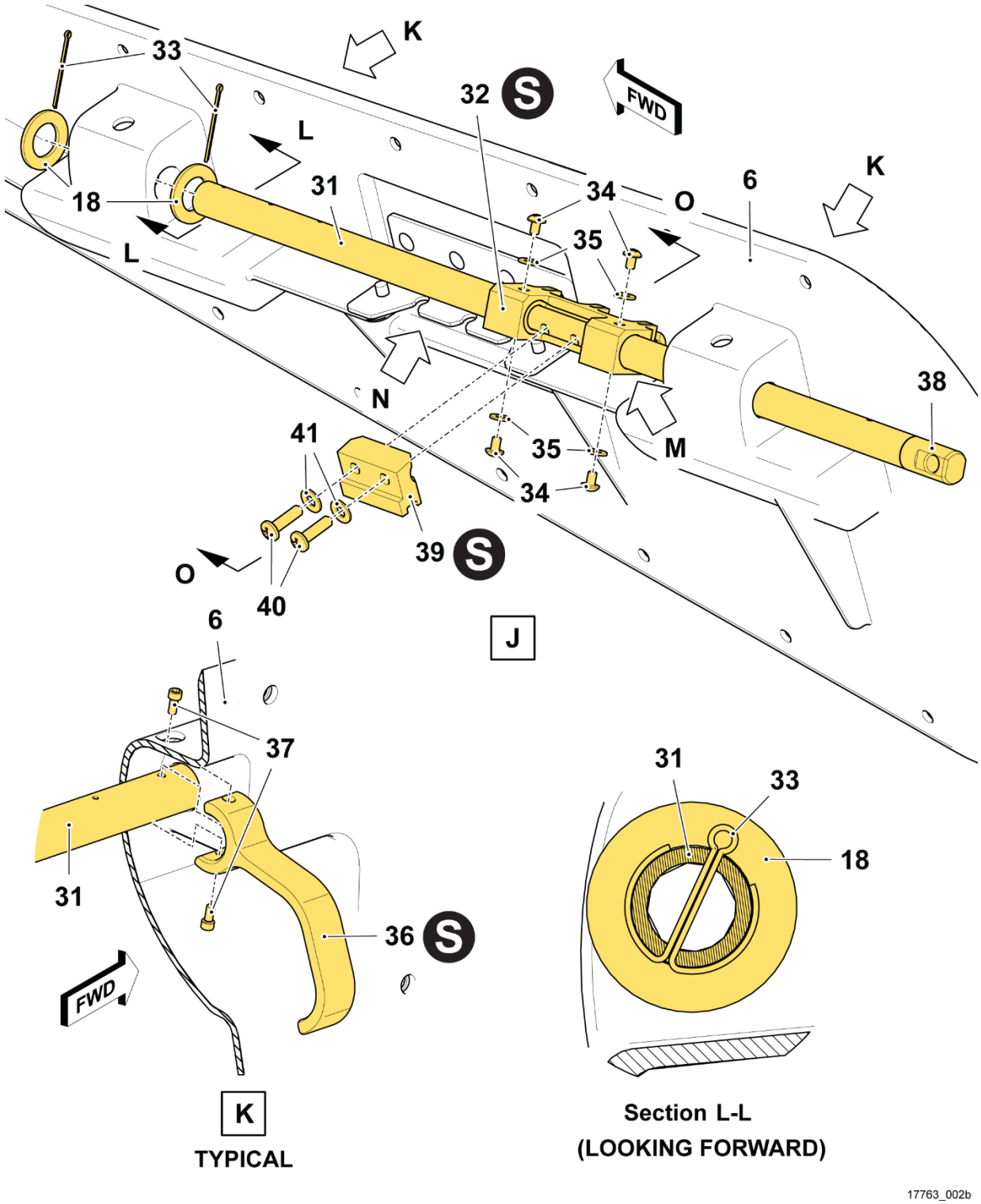

FIGURE 1 – Crew door lock retrofit (Sheet 6 of 10)

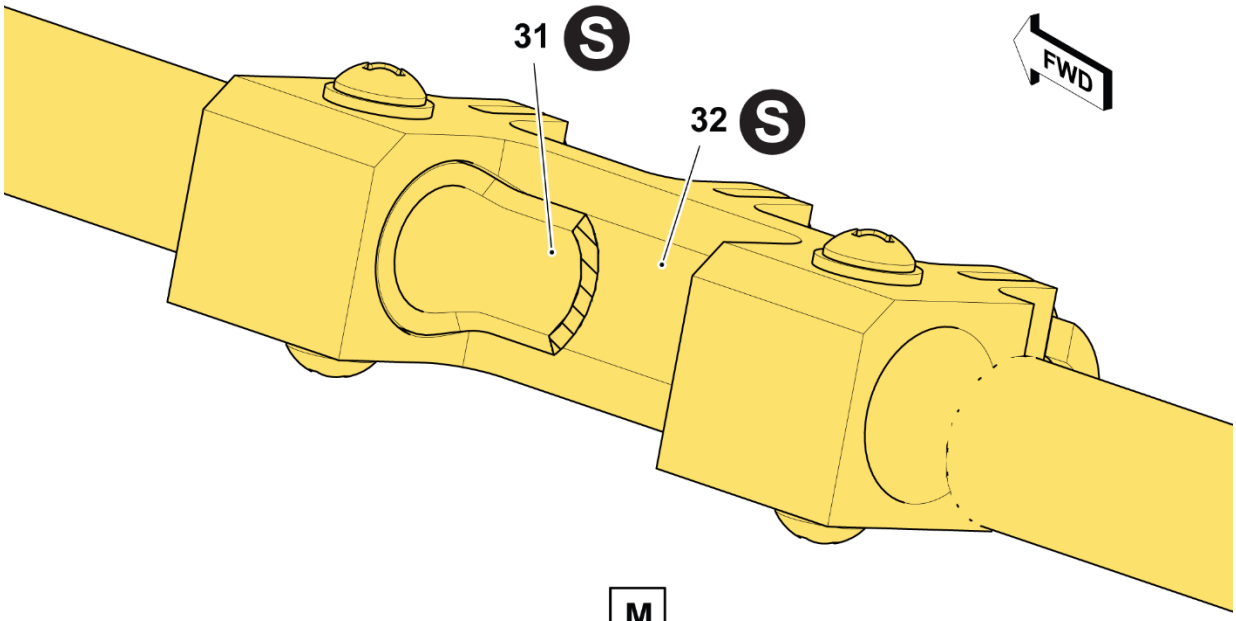

M

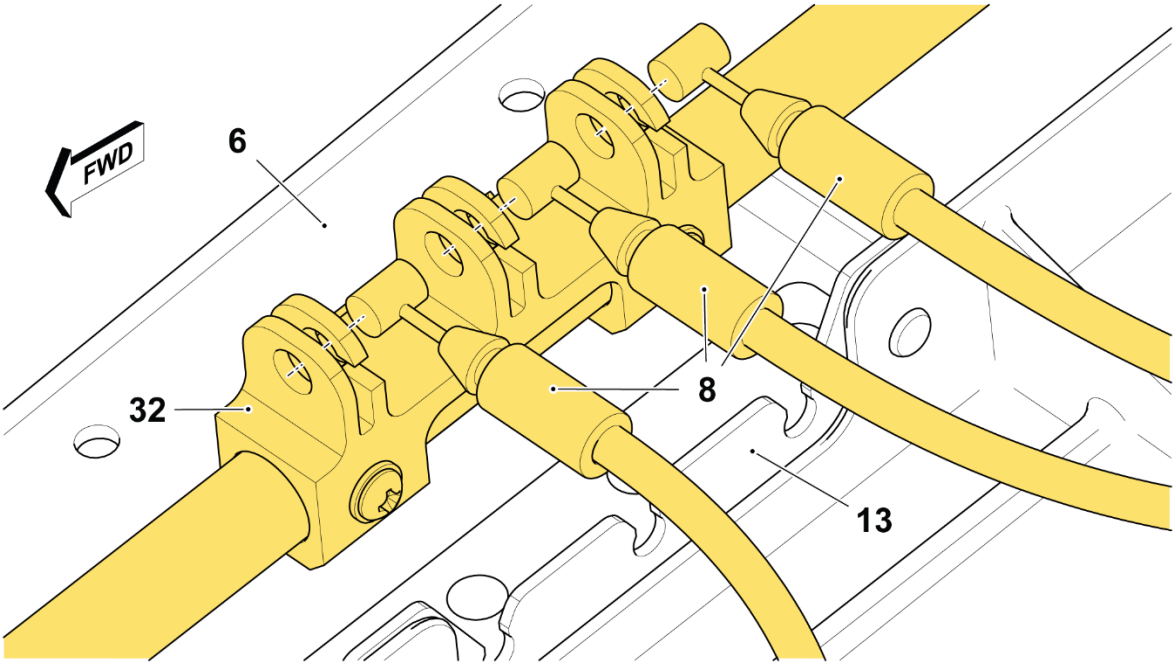

N

17763_002c

FIGURE 1 – Crew door lock retrofit (Sheet 7 of 10)

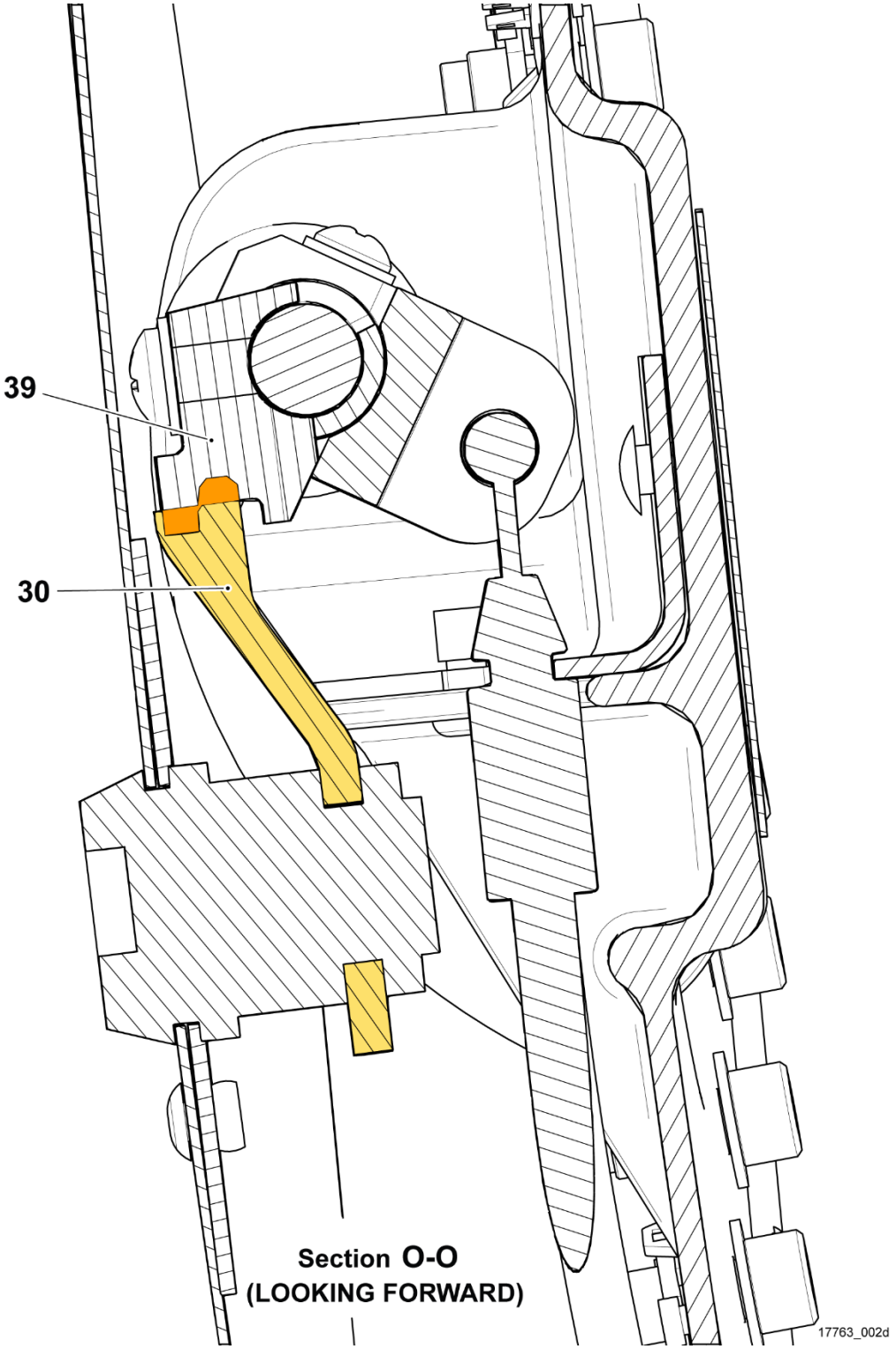

FIGURE 1 – Crew door lock retrofit (Sheet 8 of 10)

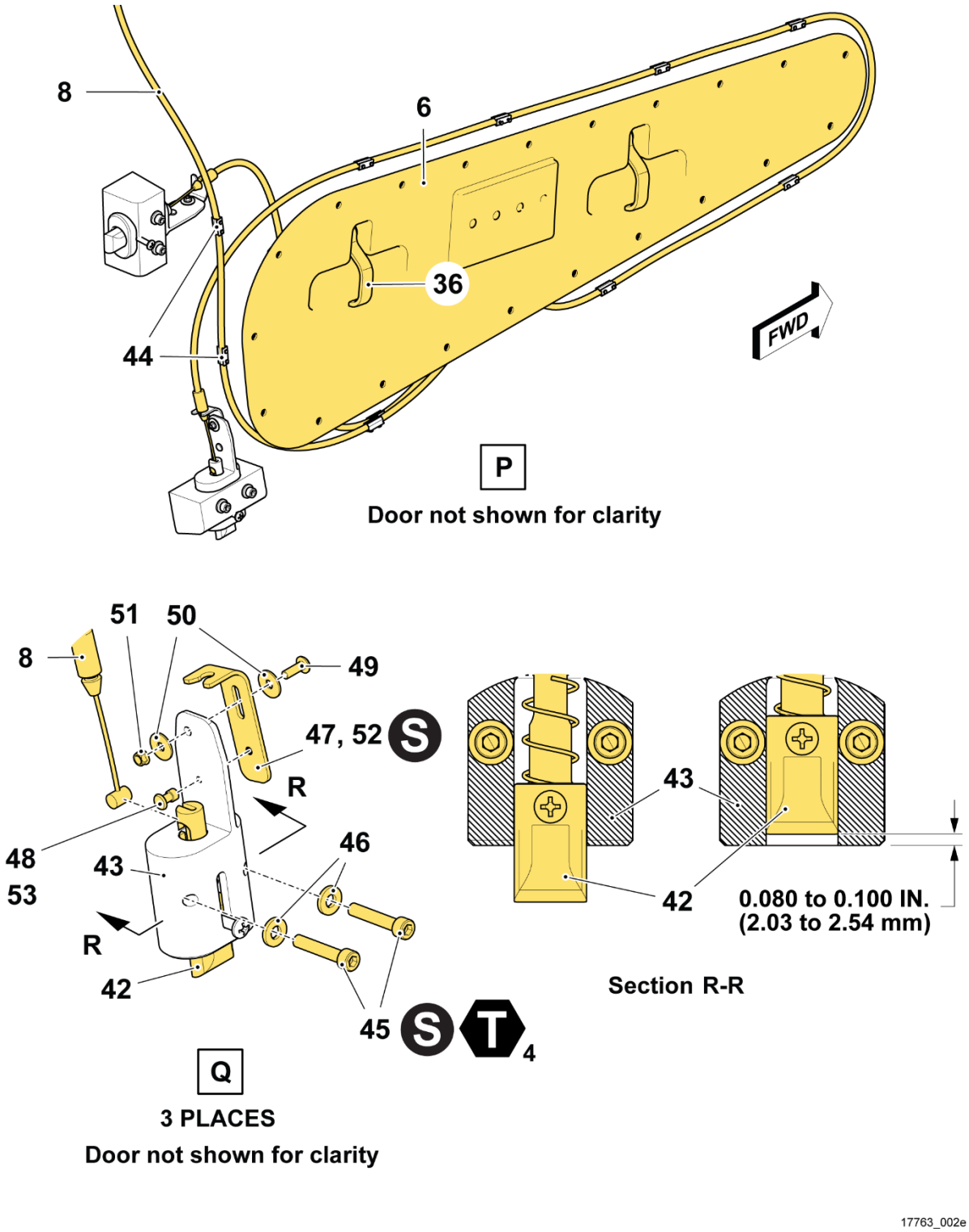

FIGURE 1 – Crew door lock retrofit (Sheet 9 of 10)

1. Crew Door (Ref)
2. Exterior Handle (Ref)
3. Actuator Rod (Ref)
4. Screw (Ref)
5. Washer (Ref)
6. Inner Door Panel (Ref)
7. Outer Handle Seal (Ref)
8. Cable Assy (Ref)
9. Clip (Ref)
10. Bolt (Ref)
11. Washer (Ref)
12. Nut (Ref)
13. Cable Clip (Ref)
14. Actuator Fitting (Ref)
15. Interior Door handle (Ref)
16. Roll Pin (Ref)
17. Cotter Pin (Ref)
18. Washer (Ref)
19. Nut (Ref)
20. Lock Assembly (Ref)
21. Rubber Sealing Washer (Ref)
22. Fastener (Ref)
23. Doubler (Ref)
24. Doubler (SLS-030-110-267) 2 Reqd
25. Fastener (MS20470AD4-4-5) 8 Reqd
26. Nut (Ref)
27. Cam (3187-3) (Ref)
28. Nut (Ref)
29. Lock Assy (20912-203) 2 Reqd
30. Cam (SLS-030-110-283) 2 Reqd
31. Outer Actuator Rod (SLS-030-110-255 L/H, SLS-030-110-256 R/H)
32. Actuator Fitting (SLS-030-110-251) 2 Reqd
33. Cotter Pin (MS24665-90) 4 Reqd
34. Screw (MS35214-22) 8 Reqd
35. Washer (140-001-9) 8 Reqd
36. Interior handle (SLS-030-110-293) 4 Reqd
37. Head Cap Screw (NAS1352C02-3) 8 Reqd
38. Inner Actuator Rod (SLS-030-110-257 L/H, SLS-030-110-258 R/H)
39. Lock fitting (SLS-030-110-253) 2 Reqd
40. Screw (MS27039C0809) 4 Reqd
41. Washer (NAS1149CN832R) 4 Reqd
42. Latch Bolt (Ref)
43. Latch Housing (Ref)
44. Clip (Ref)
45. Screw (Ref)
46. Washer (Ref)
47. Cable Attach Clip (Ref)
48. Rivet (Ref)
49. Screw (Ref)
50. Washer (Ref)
51. Nut (Ref)
52. Cable Attach Clip (SLS-030-110-247) 6 Reqd
53. Blind fastener (NAS9307M-4-03) 6 Reqd

S SEALANT (C-251)

T1 Torque Exterior Handle (2) until shank bottoms out.

T2 12 TO 15 IN-LBS
(1.35 TO 1.70 Nm)

T3 20 TO 30 IN-LBS
(2.26 TO 3.39 Nm)

T4 Torque screw (45) until slight bulge or deformation in washer (46) is visible.

17763_002f

FIGURE 1 – Crew door lock retrofit (Sheet 10 of 10)

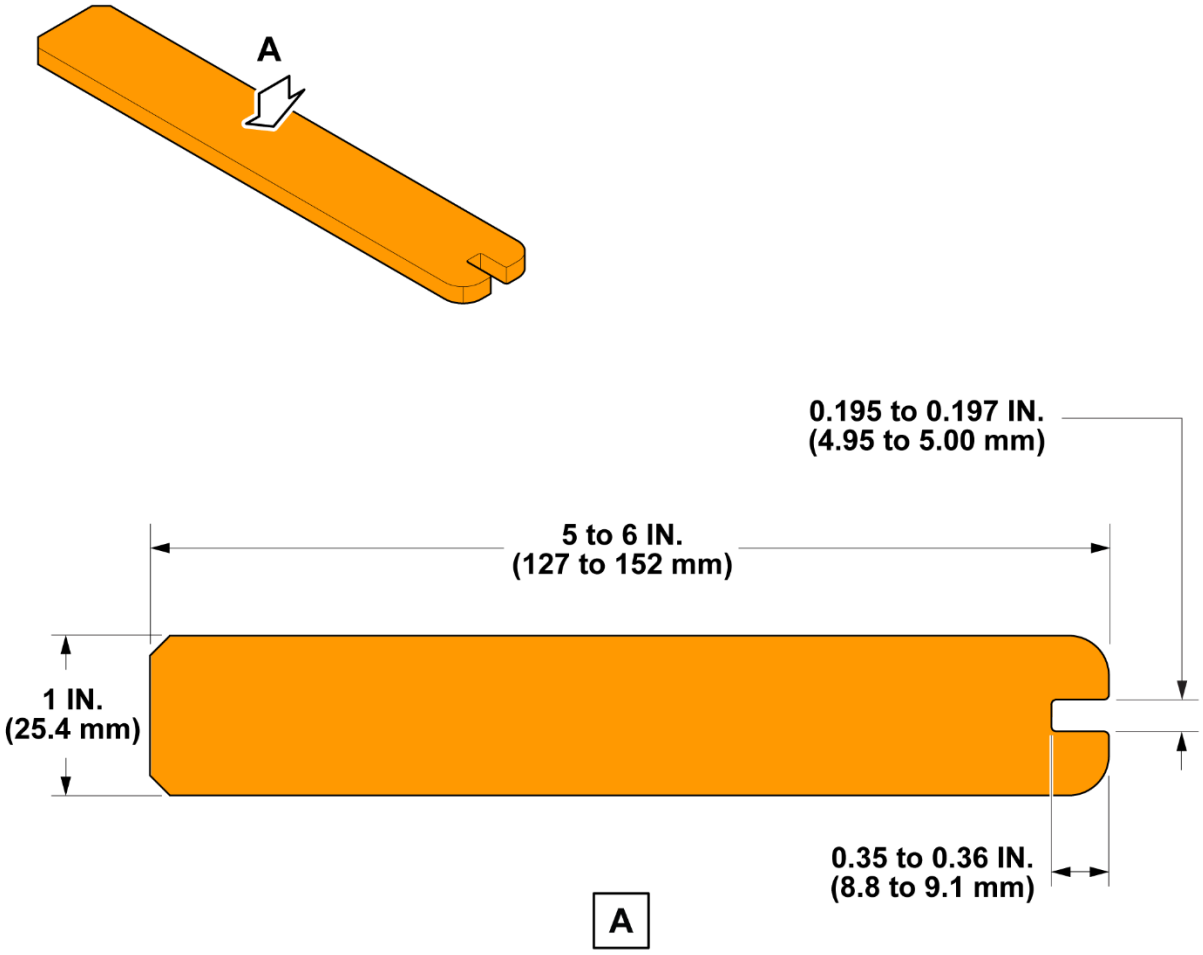

WORKAID - WRENCH

Material: 4130 steel or equivalent
Thickness: 0.20 to 0.25 IN. (5.1 to 6.3 mm)

17763_003

Figure 2 – Workaid